Design of Fly Back Converter for Solar Energy Powered DC Loads

Vidya
M.Tech, Power Electronics
Dr. Ambedkar Institute of Technology
Bangalore-560056

Arpitha Raju B
Assistant Professor, Electrical and Electronics Engineering
Dr. Ambedkar Institute of Technology
Bangalore-560056

***Abstract* — In the present day situation as the energy resources are becoming extinct in generating electricity, it has become a necessity for us to depend on the renewable energy sources to generate power and convert it according to the type of appliances that may be in use. This paper gives brief idea on the implementation of the flyback converter. As the renewable energy sources are reliable and efficient in generating electricity, in the same way the use of DC loads makes a big deal in saving power in the individual households. So it is advantageous to use both the applications namely renewable energy source and DC appliances in order to get good efficiency and power saving both at the generation station and the household. In order to supply DC power from an AC source SMPS converters are needed for rectification and voltage regulation. Flyback converter is more famous compared to other SMPS converters because of its simple circuit and the presence of isolation between the input voltage and the output voltage. Its input can be a rectified DC voltage from AC mains supply or a direct DC input voltage. Its output power range varies from different values to a maximum of 100Watts. Due to its simple circuitry and high efficiency for low power outputs its use has increased tremendously in areas requiring regulated low DC power outputs. The proposed work has been simulated and implemented with the MATLAB/Simulink.**

Keywords—Solar Energy, Rectification, flyback converter, DC loads, MOSFET Switch, Voltage Regulation, Converter efficiency.

I. INTRODUCTION

The cost of limited conventional energy sources is rising rapidly. Besides the value , the adverse impact on environment demands adopting of renewable energy. The advantage of the solar PV systems is their capability to bestow sustainable electricity without harming the environment. This becomes more significant in areas where the traditional power system has not percieved. Being the distributed energy source they are often located near the loads. The use of solar power has increased tremendously in previous couple of years. Solar power being the main renewable energy source in tropical countries like India necessitates research work for harvesting maximum power from it. The key to sustainable development is improvement in efficiency of harvesting renewable sources and effective use[1]. Flyback converter is one among the foremost commonly used SMPS converter for lower output power applications where the output voltage has got to be isolated from the input main supply. The flyback converter works on a topology that utilizes mutually coupled inductor in order to store energy when current passes through and releasing the energy when the power is removed. Also the flyback converters are almost like the booster converters in architecture and performance. Meanwhile, the first winding of the transformer replaces inductor while the secondary provides the output. Within the flyback configuration, both the first and secondary windings are utilized as two separate inductors. The output power of flyback sort of SMPS circuits may vary from few watts to but 100 watts. The foremost commonly used flyback converter requires one controllable switch like MOSFET and therefore the usual switching frequency is within the range of 100kHz. A two switch topology exists in this topology which offers better energy efficiency and lesser voltage stress across the switches but the circuit complexity increases slightly and costs more. The general circuit topology of this flyback converter is much simpler than compared to other SMPS circuits. In respect of energy-efficiency, flyback converters are better compared to several other SMPS circuits but it's simple topology and low cost makes it popular in low output power range.

II. MOTIVATION AND OBJECTIVE

As the renewable energy sources are reliable and efficient in electricity generation, in the same way the use of DC loads makes a big deal in saving power in the individual households. So it is advantageous to use both the applications namely renewable energy source and DC appliances in order to get good efficiency and power saving both at the generation station and the household. In order to supply DC power from an AC source an SMPS converter is needed for rectification and voltage regulation[2].

Flyback converters are much famous among other SMPS converters because of its simple circuit and presence of isolation between the input voltage and the output voltage. Its input can be a rectified DC voltage from AC mains supply or a direct DC input voltage. Its output power ranges from different values to a maximum of 100Watts. Due to its simple circuit and high efficiency for low power outputs its use has been increased tremendously in areas requiring regulated low DC power outputs[3].

III. EVOLUTION OF SOLAR TECHNOLOGY

In a world where most energy production comes from non-renewable resources, people are trying to find efficient and price-effective ways to use renewable energy sources. One of the great leaps in renewable technology has been the solar panels, which is composed of several solar cells that convert light into electricity. Although some people associate solar panels with new-age technology, scientists have been working with solar cells for nearly around 200 years. The evolution of solar panels has been a gradual yet worthy pursuit. In these two last decades, the solar power capacity of countries all over the world has increased exponentially. This has been caused by the development in solar technology together with the increment in panel manufacturing. This led to an increase in reliability and efficiency in the functioning of solar modules and a reduction of the price of kWh of energy generated. In addition, other factors that have boosted the solar energy generation are net metering and incentives given by governments encouraging investors to begin solar

generation projects supporting solar PV installations in many countries.

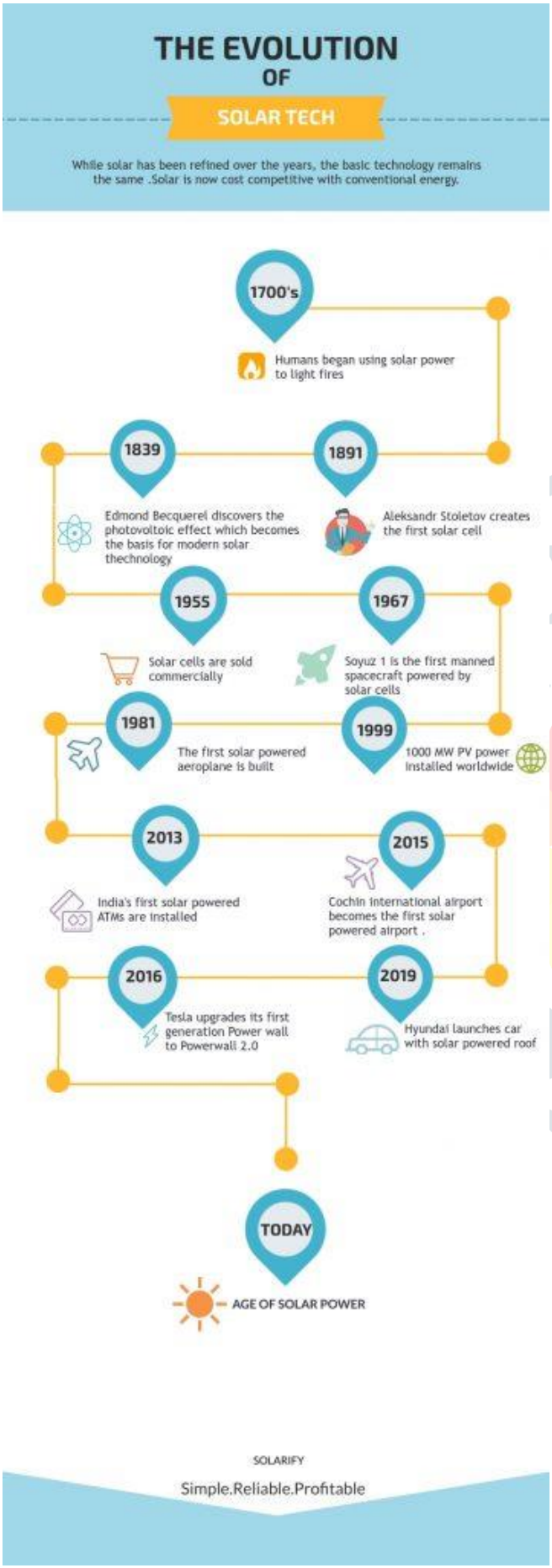

Figure 1: Solar Technology Evolution

Solar power technology has been a cheaper option than building new electric lines for providing power to remote locations on farms, ranches, orchards, and some other agricultural operations. As it requires no fuel and no maintenance, it is more convenient to operate and maintain than diesel or gasoline generators. Solar power has come a long way in the last 200 years, from observing the properties of light to finding new ways to convert it to solar power. Today, the cost comparison of solar power technology with various technologies shows that the former is suitable for any location in the world. In 2019, solar power's future is brighter than ever. Undoubtedly, the solar energy sector has made a lot of progress over the years. However, the next decade is set to experience an unparalleled pace of growth – strengthening solar technology as a pillar for renewable energy adoption.

IV. PRINCIPLE AND WORKING OF FLYBACK CONVERTER

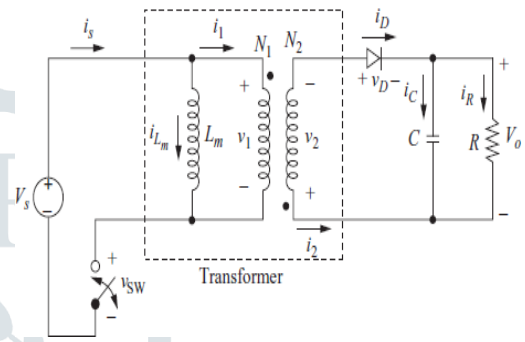

Figure 2: Basic Topology of flyback converter

Flyback converters are a type of DC-DC converters with a special feature, they possess galvanic isolation. This is achieved with a transformer in the middle of the circuit storing energy to then release it to the load. The special design of this converter makes the Flyback an indirect converter as it does not have a direct path between the input and the load in any moment of the operation. In Figure.2 the circuit diagram of a fly-back converter is shown. Input supply that has to be given to the SMPS circuit can be a rectified voltage from any AC supply. An isolation transformer is used to isolate the source side as well as the load side. Since the SMPS circuit operates with high switching frequency, the input voltage even though is not regulated is sometimes considered as regulated at the output side because of its high frequency response. Switching device like MOSFET is used for fast responses[4].

A. Analysis for the Switch open:

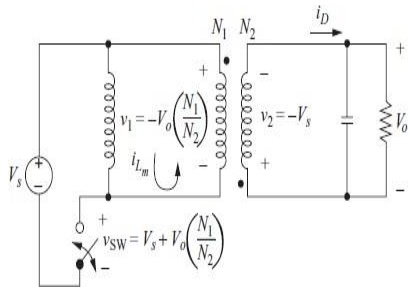

Figure 3: Circuit for switch open

When the switch is opened (as shown in Fig. 3), the magnetic flux and primary current drops. As there is no return path for the current in the primary side, hence the energy from the source side is transferred to the load side[5]. The secondary

voltage is positive, thus forward-biasing the diode and allows the current to flow from the transformer. The energy from the transformer core recharges the capacitor and the current on the secondary side is transferred to the load side via the short-circuited diode.

B. Analysis for the switch closed:

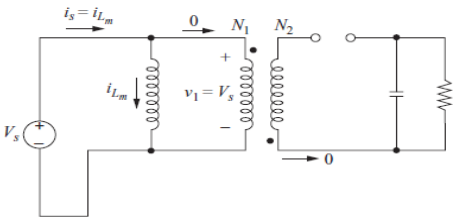

Figure 4: Circuit for switch closed

When the switch is closed(as shown in fig. 4) the primary of the transformer is connected directly to the input voltage source. The primary current and magnetic flux in the transformer increases, storing energy in the transformer As there is a return path for the current in the primary side, the primary side inductor gets energised linearly [6]. The voltage that is induced in the secondary winding is negative, the diode is reverse biased and the secondary side inductor cannot be energized linearly. So, the current through it will be zero.

V. MATLAB SIMULATION BLOCK OF FLYBACK CONVERTER

The simulink model of the flyback converter used for solar energy powered DC loads is shown in figure 5. The input supply given is a DC Voltage source and then stepped down to lower voltage levels using the flyback converter. The flyback converter is to be designed based on the parameters used in system analysis. After designing the flyback converter for the given specifications the results are obtained.

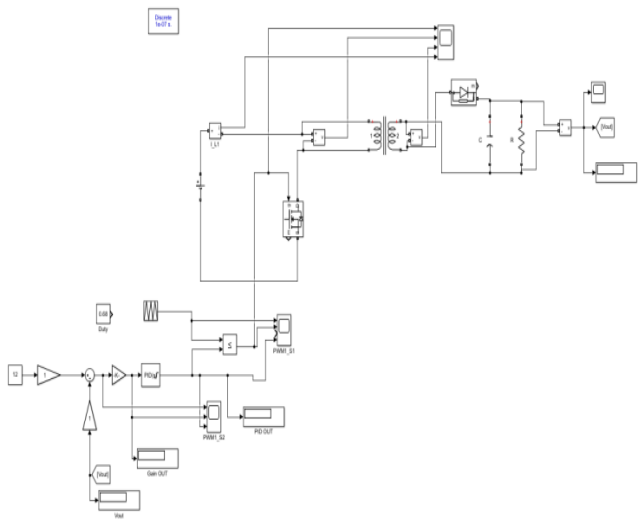

Figure 5: Simulation block of flyback converter

SL NO	Parameters	Value
1	DC Voltage source[V]	200V
2	Capacitance[C]	$200*10^{-6}$ F
3	Resistance[R]	1.44 ohms
4	FET Resistance[R_{on}]	0.1 ohms
5	Internal Diode Resistance[R_d]	0.01 ohms
7	Nominal Power & Frequency[pn(VA) fn(Hz)]	[300 20000]
8	Winding 1[V_1 R_1 L_1]	[13.08 0 0]
9	Winding 2[V_2 R_2 L_2]	[1 0 0]
10	Winding 3[V_3 R_3 L_3]	[$3.15*10^5$ 0.7938 0.084225]
11	Magnetization Resistance & Inductance[R_m L_m]	[0 $0.16*10^{-3}$]

Table 1: Parameters used in Analysis

VI. SIMULATION RESULT

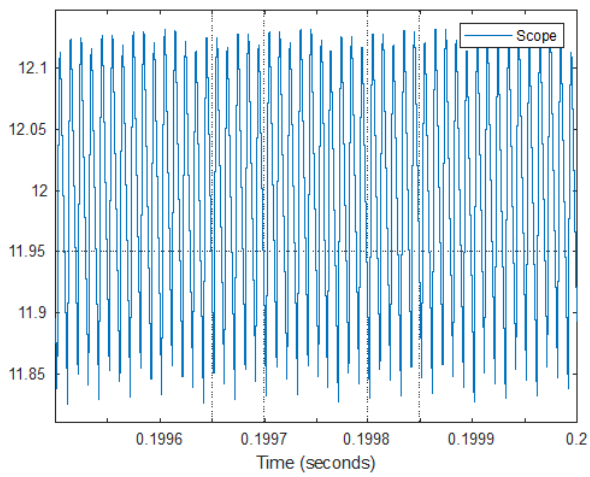

Figure 6: output voltage waveform of the converter

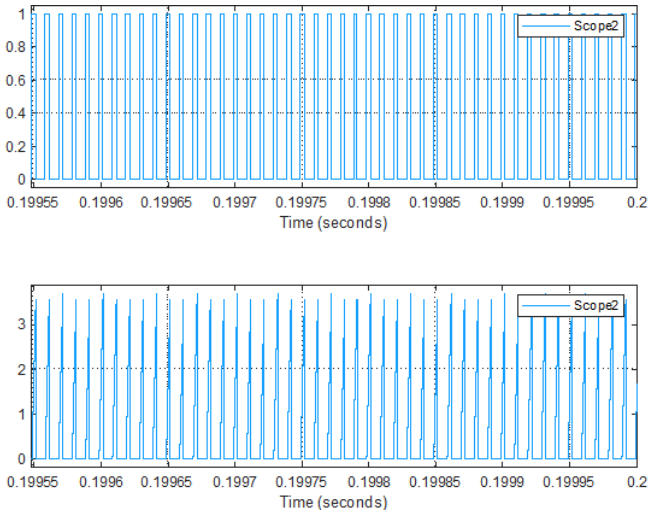

Figure 7: Resulting waveforms of primary MOSFET gate and input current waveform

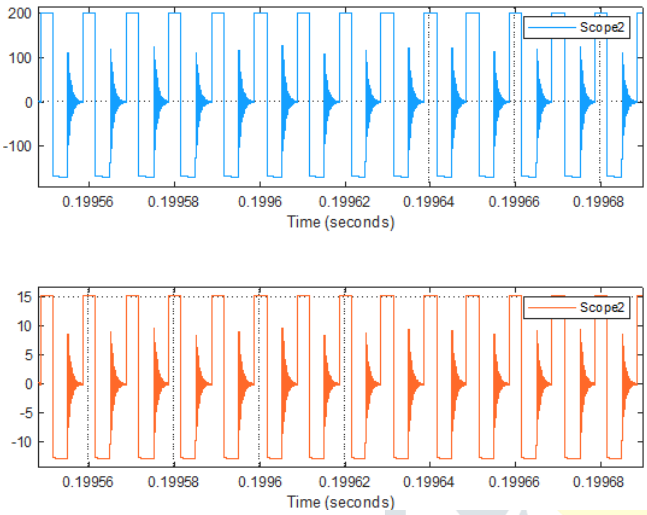

Figure 8: Resulting waveforms of voltage across primary of transformer and voltage across secondary of transformer

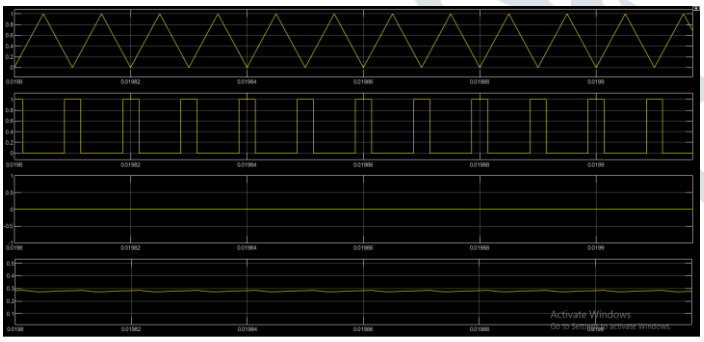

Figure 9: Resulting waveforms of PWM generator, MOSFET gate & PID Controller output

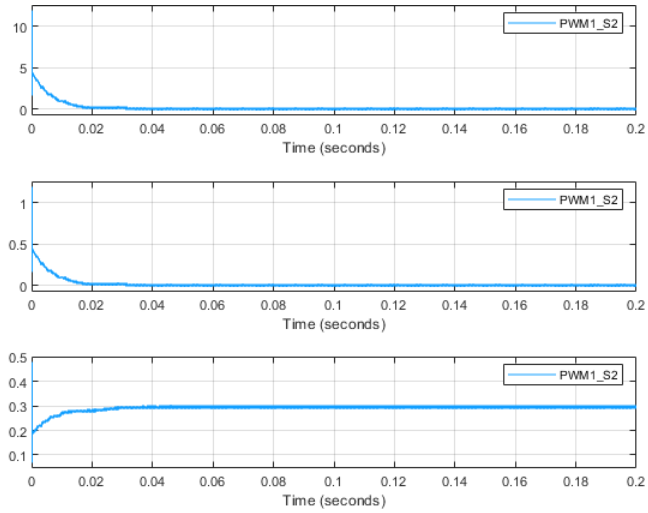

Figure 10: Resulting waveforms of voltage error, PID Controller input and PID Controller output

VII. CONCLUSION

This paper gives brief idea on the implementation of the flyback converter for solar energy powered dc loads. The basic working of the converter, its design procedure, simulation block and its results are mentioned in this paper. The flyback converter has been designed for the given specifications and the results are obtained. The input supply given is a direct DC Voltage source i.e., 200V and then stepped down to lower voltage levels using the flyback converter i.e., an output voltage of 12V is achieved. This flyback converter is mainly intended to be used in the household and rural areas where mostly DC appliances are in use.

ACKNOWLEDGMENT

The authors would like to thank the Dr. Ambedkar Institute of Technology, Bangalore for providing the technical support.

REFERENCES

[1] G.Boyle, “Renewable Energy, Power for a sustainable future”, Oxford University Press in association with the Open University, second edition, 2004.

[2] Zhang H J. “Basic Concepts of Linear Regulator and Switching Mode Power Supplies”,Linear Technology, Application note 140, Oct 2013.

[3] L. Umanand, “Power Electronics Essentials and Applications”, Wiley India Pvt. Ltd,

[4] Rakesh Maurya1, Punnaiah Gunturu & Shaikh Mo,’” Simulation and Design of an Integrated Fly Back Converter for Uninterruptible Power Supply”,IEEE Trans, Vol 3,2010.

[5] Ned Mohan, Tore M. Undeland and William P. Robbins, “Power Electronics Converters, Applications, and Design”, John Wiley and sons, 3rd Wiley India edition, 2012.

[6] Daniel. W. Hart, “Power Electronics”, The McGraw-Hill Company, 3rd edition, 2010.

[7] W. Tang, Y. Jiang, G. C. Hua, and F. C. Lee," Power Factor Correction With Flyback Converter Employing Charge Control", IEEE Trans, 1993.

[8] K. Umamaheswari , V. Venkatachalam "Single Phase Converters for Power Factor Correction with Tight Output Voltage Regulation" International Journal of Emerging Technology and Advanced Engineering , Volume 3, Issue 2, February 2013

[9] Y. M. Liu and L.K.Chang, "Single-stage soft-switching AC–DC converter with input current shaping for universal line applications," IEEE Trans. and.Electron.,vol.56, no.2, pp.467–479, Feb.2009.

[10] Tzuen-Lih Chern ,Li-Hsiang ,Liu Ping-Lung Pan ,Yi-Jie Lee" Single- Stage Flyback Converter for Constant Current Output LED Driver with Power Factor Correction", IEEE Trans. and.Electron.,vol.56, no.2, pp.467–479, Feb.2009.

[11] Himanshu K Patel "Flyback Power Supply EMI Signature and Suppression Techniques", IEEE Trans. and.Electron.,vol.56, no.2 , Feb 2009.

[12] "Switch-Mode Power Supply" Reference Manual by On Semiconductor, rev. 4, April2014.

AUTHORS

First Author – Vidya is an M.Tech student in power electronics in Dr. Ambedkar institute of technology, Bengaluru.

Second Author – Arpitha Raju B is an Assistant professor in Electrical and Electronics Department in Dr. Ambedkar institute of technology, Bengaluru.