Efficient Power Control for Grid-Connected PV system using Fuzzy Logic and Cascaded MMC

[1]Dinbandhu Kumar, [2]Reeta Pawar, [3]Anurag S D Rai

[1]Research Scholar Mtech. Power Systems, [2,3]Associate Professor,
[1,2,3]Department of Electrical and Electronics Engineering,
[1,2,3] Rabindranath Tagore University, Bhopal-Chiklod Road, Raisen-464993(M.P

ABSTRACT: The Photovoltaic System gaining attention in the global run for renewable or non -conventional energy sources and the systems utilizing PV modules are motivated from the future benefits of it. The proposed methods significantly control the voltage from input to output including reactive and active power and reduce the problems mentioned above. The simulation waveforms clearly show the effectiveness of the proposed method for PV based distribution system.

Keywords - PV System, Cascaded Structure, Active and Reactive Power.

1.1. Introduction

At present, the total energy consumption in the world is fourteen tera-watts (TW) at any given moment, and this consumption is estimated to be about two times higher by 2050 [14]. To meet this demand, all forms of energy need to be increased hastily in the coming years. Though, cascaded multilevel converters in photovoltaic system is different from their some successful application such as harmonic compensator, static synchronous compensator (STATCOM), solid state transformer, average voltage motor drive which are connected with balanced segmented dc sources [7].

In the future, this saturation rate will become superior because of the economical advantages of these types of renewable energy systems.

Thus, each grid-connected PV system has to perform two necessary functions [19]:

- Remove maximum power output from PV arrays, and
- Insert an almost harmonic free sinusoidal current into the grid.

Because the output of PV panels are direct current (in the case of grid-connected PV systems), the interface is characteristically a DC-AC converter (inverter) which inverts the DC output current that comes from the PV arrays into a coordinated sinusoidal waveform as shown in Fig. 1.1 [20].

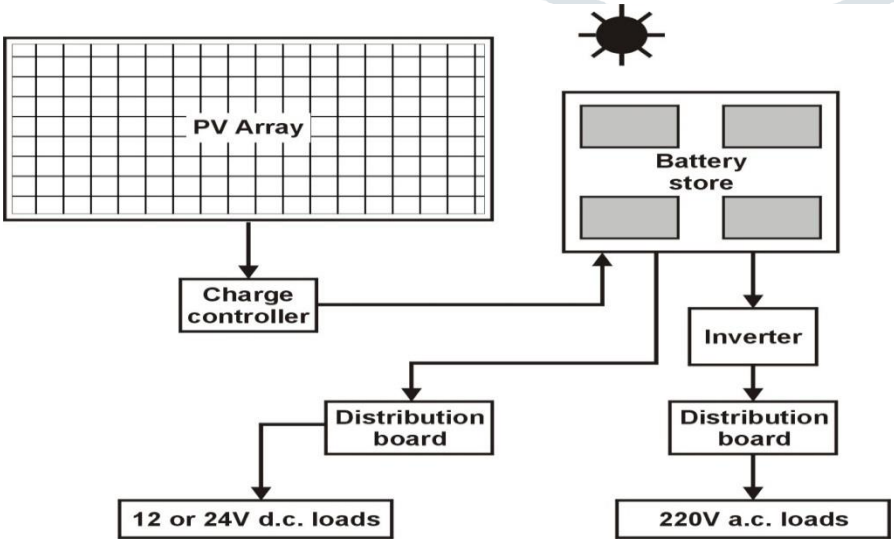

Figure1.1 General schematic of grid connected PV system

1.2. Principle of Modular Multilevel Converter

The MMC studied in this work consists of various cascaded modules, each one being a half bridge associated to a capacitor. Numerous modules are connected in series with an inductance form a converter arm, according to figure 1.2., two converter arms form a phase-leg.

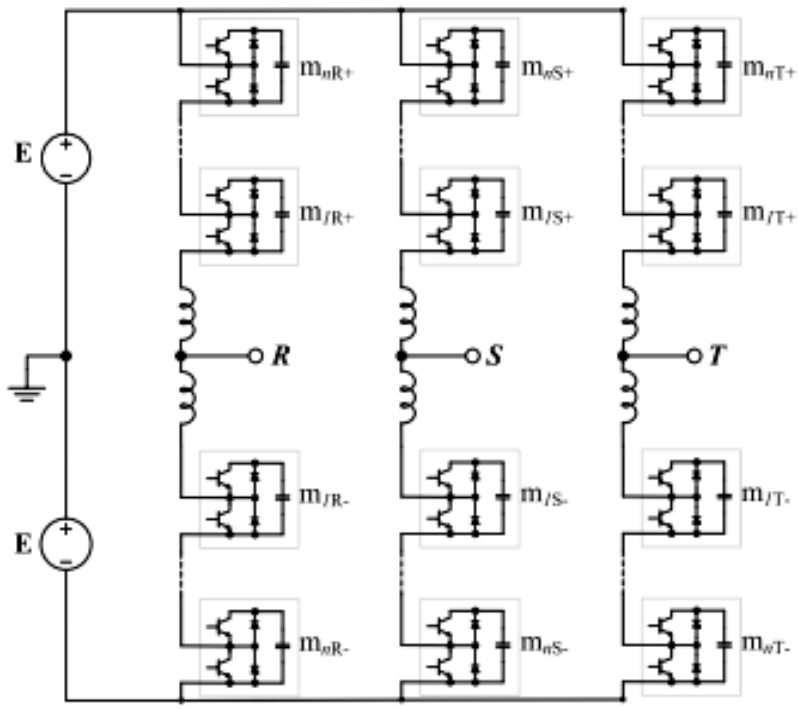

Figure 1.2. MMC Topology

The structure of the MMC including module capacitors indicates that an inner voltage matching control for the capacitor voltage level is required. This balancing control includes two parts: the control of the standard capacitor voltage in a leg and an individual voltage control for each of the modules in the leg. The dc-link voltage control is assigned to this balancing control. Figure 1.2. Provides a general picture of the different control blocks acting at the MMC.

1.3 System Configuration and Power Flow Analysis-:

A) System Configuration-

The planned grid-connected photovoltaic system is represented in Figure 1.3, which shows a three-phase and two-stage power exchange system. This structure features have various remarkable advantages compare with conventional photovoltaic systems with line-frequency transformer.

B) Power Flow Analysis-

In this cascaded photovoltaic system, power distribution among these sections is mainly lead by their individual ac output voltage because the same grid current flow during these modules in each phase as shown in Figure 1.3. Vector diagram is derived in Fig. 1.4. to reveal the principle of power distribution among four PV inverter modules in phase a. The same analysis can be applied for phase's band c considering the relative stability of the grid voltage, V_ga is utilized to the synchronous signal. The α-axis is in phase by grid voltage and the β-axis is lags the α-axis by 〖90〗^0 as shown in Fig. 1.4(a).

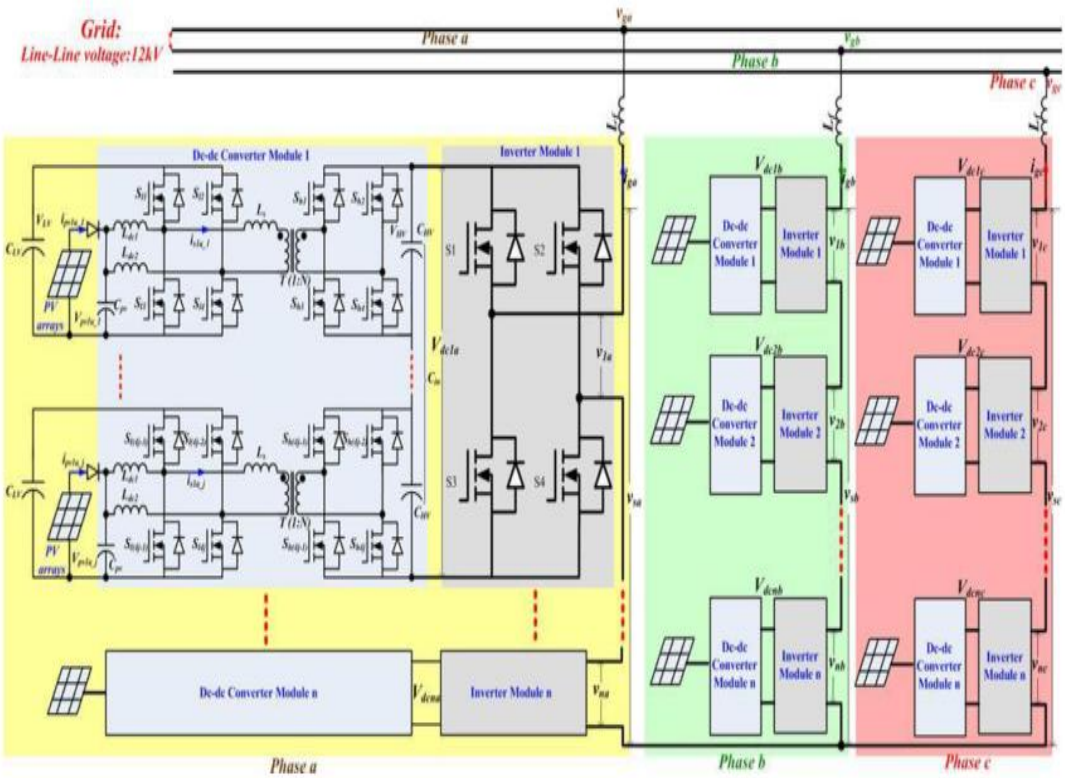

Figure 1.3 Proposed grid-connected PV system with cascaded multilevel converters at 3MW

The cascaded multilevel inverter is directly connected to the grid without big line-frequency transformer, and the formed output voltage since cascaded modules make possible to be comprehensive to meet up high grid voltage requirement according to the modular structure.

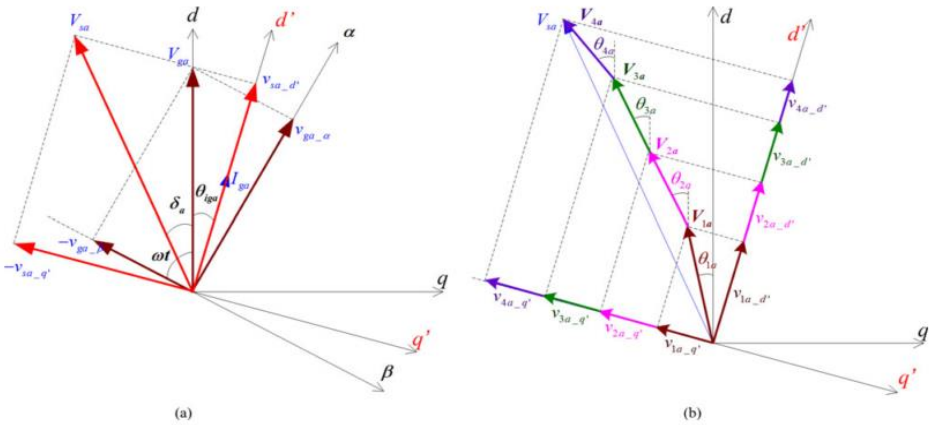

Figure 1.4. Vector diagrams showing relation between α β frames, d q frame, and d' q' frame. (a) The relationship between the grid current, grid voltage, and inverter output voltage in phase a.(b) The voltage distribution of PV inverter in phase a

1.4. Procedure to simulate the fuzzy controller in MATLAB:

1. First rules have to coded and written in m-file and saved with fis extension.

2. Then the FIS editor will be opened by typing fuzzy in the command window.

3. Then the required fis file has to be imported by browsing.

4. After the loading of fis file the controller is ready to be operated.

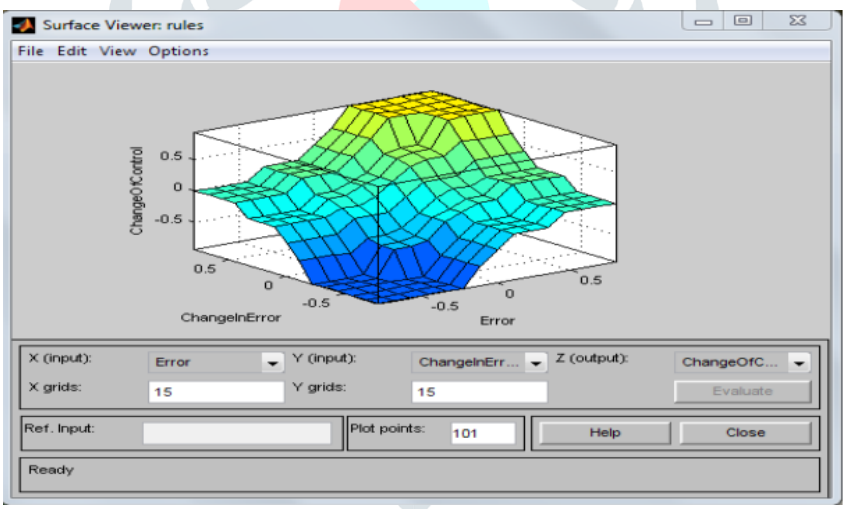

Figure 1.2 Dimensional view of control surface

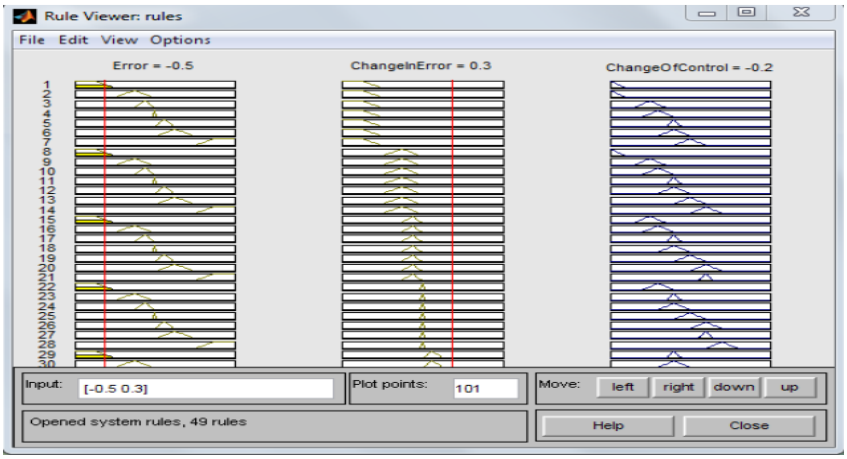

Figure 1.3 Rule Viewer with input e= -0.5 and Δe=0.3

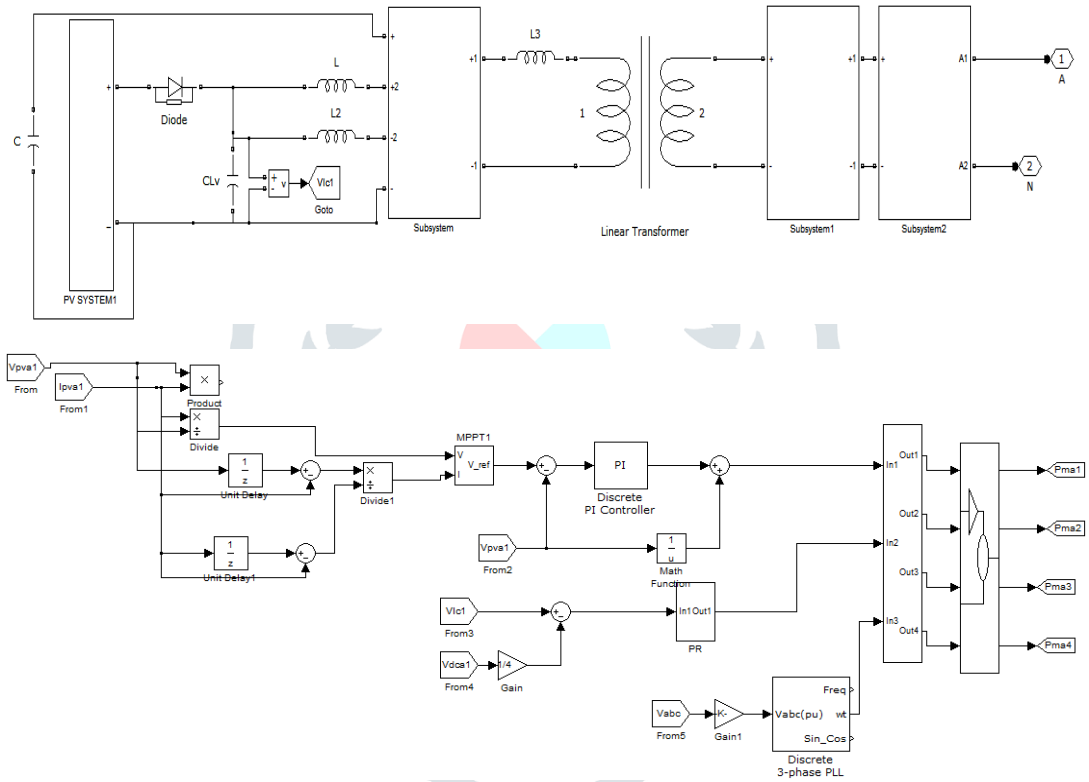

Figure 1.7 Model for MMC for photovoltaic system

1.4 Results

The result of the thesis is the output of the MATLAB/Simulink model. The output of model is enhancement of the previous work on Decoupled active and reactive power control for large-scale grid-connected PV system by using cascaded modular multilevel converter.

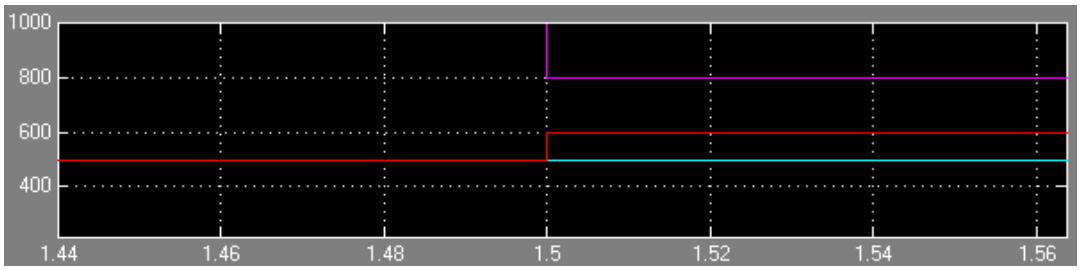

Figure 1.8 a) PV array Irradiation (200w/m^2)/ div V/S time

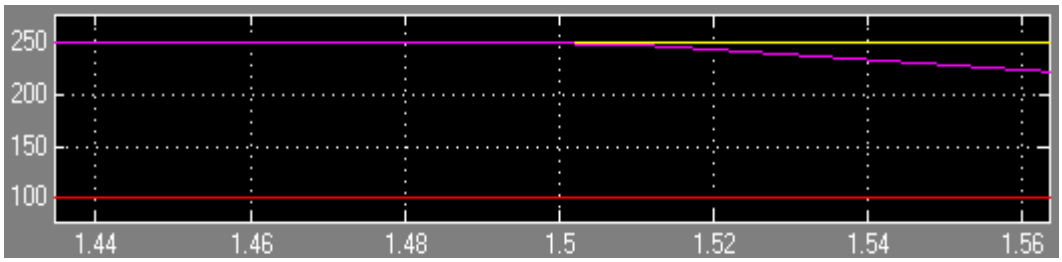

Figure 1.8 b) Active Power of PV modules (100kW)/div V/S time

1.5. Conclusion-:

In this thesis addressed the active and reactive power distribution between cascaded PV inverter modules and their impact on system stability and power quality for the grid-connected cascaded photovoltaic system by using fuzzy logic technique. The output voltages for all units were separate based on grid current synchronization to attain independent active and reactive power distribution. Reactive and active power control strategy was developed to improve system operation performance by using cascaded modular multilevel converter and fuzzy logic technique.

References

[1] Y. Bo, L. Wuhun, Z. Yi, and H. Xiangning, "Design and analysis of a grid connected photovoltaic power system," IEEE Trans. Power Electron., vol.25, no.4, pp.992–1000,Apr. 2010.

[2] J. Ebrahimi, E. Babaei, and G. B. Gharehpetian, "A new topology of cascaded multilevel converters with reduced number of components for high-voltage applications," IEEE Trans. Power Electron., vol. 26, no. 11, pp.3109–3118,Nov. 2011.

[3] L. Nousiainen and J. Puukko, "Photovoltaic generator as an input source for power electronic converters," IEEE Trans. Power Electron., vol. 28, no.6,pp. 3028–3037,Jun.2013.

[4] D. Meneses, F. Blaabjery, O. Garcia, and J.A. Cobos, "Review and comparison of step-up transformerless topologies for photovoltaic AC-module application,"IEEE Trans. Power Electron. vol.28, no.6,pp.2649–2663, Jun.2013.

[5] L.M. Tolbert and F. Z. Peng, "Multilevel converters as a utility interface for renewable energy systems," in Proc. IEEE Power Eng. Soc. Summer Meet., Seattle, Washington, USA, Jul. 2000,pp. 1271–1274.

[6] P. Denholm and R. Margolis, "Very large-scale deployment of grid connected solar photovoltaics in the united states: Challenges and opportunities," in Proc. Nat. Renewable Energy Laboratory Conf. Paper Preprint Solar, U.S. Department of Energy, 2006.

[7] M. Abolhassani, "Modular multipulse rectifier transformers in symmetrical cascaded H-bridge medium voltage drive," IEEE Trans. Power Electron., vol. 27, no. 2,pp. 698–705,Feb. 2012.

[8] K. Sano and M. Takasaki, "A transformerless D-STATCOM based on a multivoltage cascaded converter requiring no dc source," IEEE Trans. Power Electron., vol.27, no.6, pp.2783–2795,Jun. 2012.

[9] C.D. Townsend, T. J. Summers, J. Vodden, A. J. Watson, R.E. Betz, and J. C. Clare, "Optimization of switching losses and capacitor voltage ripple using model predictive control of a cascaded H-bridge multilevel statcom," IEEE Trans. Power Electron., vol. 28, no. 7, pp. 3077–3087, Jul. 2013.

[10] B. Gultekin and M. Ermis, "Cascaded multiulevel converter-based transmission STATCOM: System design methodology and development of a 12 kV ± 12 MVAr power stage," IEEE Trans. Power Electron., vol. 28, no.11, pp.4930–4950,Nov. 2013.

[11] T. Zhao, G. Wang, S. Battacharya , and A. Q. Huang, "Voltage and power balance control for a cascaded H-bridge converter-based solid-state transformer,"IEEE Trans. Power Electron.vol .28, no.4, pp. 1523–1532, Apr. 2013.

[12] X. She, A. Q. Huang, and X. Ni, "Current sensorless power balance strategy for DC/DC converters in a cascaded multilevel converter based solid state transformer,"IEEE Trans. Power Electron.,vol.29,no.1,pp.17–22, Jan. 2014.

[13] S. Du, J. Liu, and J. Lin, "Hybrid cascaded H-bridge converter for harmonic current compensation,"IEEE Trans. Power Electron. vol. 28, no.5, pp. 2170–2179, May. 2013.

[14] D. L. Chandler, "What can make a dent?" MIT News, Oct. 2011.

[15] Wikipedia, "Solar energy," March 2014. [Online]. Available: http://en.wikipedia. Org/wiki/Solar energy

[16] G. Carr, "Alternative energy will no longer be alternative," The Economist, Nov. 2012. [Online]. Available: http://www.economist.com/news 21566414-alternative-energy-will-no-longer-be-alternative-sunny-uplands

[17] NREL, "Best research photovoltaic cell efficiencies," Dec. 2013.

[18] X. Yuan and Y .Zhang, "Status and opportunities of photovoltaic inverters in grid-tied and micro-grid systems," Proceedings of CES/IEEE 5th International Power Electronics and Motion Control Conference (IPEMC), vol. 1, pp. 1–4, Aug. 2006.

[19] A. Khalifa and E. El-Saadany, "Control of three-phase grid-connected photovoltaic arrays with open loop maximum power point tracking," Proceedings of IEEE Power and Energy Society General Meeting, pp. 1–8, 2011.

[20] D. C. Martins, "Analysis of a three-phase grid-connected PV power system using a modified dual-stage inverter," International Scholarly Research Notices (ISRN) Renewable Energy, vol. 2013, pp. 1–18, 2013.

[21] B. Xiao, L. Hang, J. Mei, C. Riley, L. Tolbert, and B. Ozpineci, "Modular cascaded h bridge multilevel PV inverter with distributed mppt for grid-connected applications," Industry Applications, IEEE Transactions on, vol. 51, no. 2, pp. 1722–1731, March 2015.

[22] B. Alajmi, K. Ahmed, G. Adam, S. Finney, and B. Williams, "Modular multilevel inverter with maximum power point tracking for grid connected photovoltaic application," in Industrial Electronics (ISIE), 2011 IEEE International Symposium on, June 2011,pp.2057–2062.