Experimental drying rate and colour analysis of plain and alum pretreated potato chips dried in forced convective dryer with air recirculation

[1]Hitesh Singh Waskale, [2]Mahesh Ganpat Bhong
[1,2]Department of Mechanical Engineering,
[1]Indira College of Engineering and Management, Pune, India

Abstract - Eatable containing high moisture has low shelf life as it gets colonies by micro bacteria. Our ancestors use to dry the fruits and vegetables so it can be preserved for a long time. The methods used by them are still used today but it have certain drawbacks like long drying periods. This experiment deal with forced convective drying of potato chips with air recirculation. Traditional practice involves slicing, boiling and salt bath of potato chips. This experiment includes tradition practice plus hoax that alum pretreated potato chips (β) dry faster than plain potato chips (α) and both chips has significant colour difference between them. 50 grams of potato chips having thickness about 1 mm been dried for 2 hours at velocity of 1 ms^{-1}, 1.5 ms^{-1} and 2 ms^{-1} with drying air temperature of 50°C, 60°C and 70°C and air recirculation ratio of 0%, 25%, 50% and 75%. Drying rate of potato chips seems to increase when the velocity and temperature of drying air increases but decreases when air recirculation ratio increases. The drying rate of plain potato chips and alum pretreated potato chips seems to be identical and have standard deviation of 0.005162 % of w.b. per minute. The finest drying rate of 0.5031 % of w.b. and 0.5016 % of w.b. per minute for plain potato chips (α) and alum pretreated potato chips (β) was obtain at air velocity of 2 ms^{-1} , temperature 70°C and 0% air recirculation ratio. The colour difference ($\Delta E_{\alpha-\beta}$) between plain and alum pretreated chips was found to be 0.69277 which was negligible.

Index Terms - Air recirculation, Colour analysis, Forced convective drying, Potato chips

I. INTRODUCTION

Numerous authors have studied the effect of air recirculation on the drying rate of the fruits and vegetables. Miller et al. [1] studied the effect of air recirculation for orange packing line dryers. Drying potential was reduced by 6.5% when air was recirculated. Rumsey, Thompson, and Young [2] recirculated 60% of the exhaust drying air into the dryer and achieved high energy saving in drying of walnuts. Thompson et al. [3] obtained energy savings of up to 15% by recycling exhausted air in a fruit tunnel dehydrator. Young [4] found that the drying of peanuts using recirculated air result in reduction of the energy requirements by 26%. Walker [5] found 46% to 53% energy saving using air recirculation for drying segments of apple and peach, respectively. In grain drying, Meiering, Daynard, Broewn, and Otten [6] found energy savings of 24%. Giner and De Michelis [7] increase the thermal efficiency of maize dryers recirculating exhaust air between 70% and 86%. Singh [8] studied the drying of cauliflower, cabbage and onion. The drying time was in the range 11-14 hour and overall energy efficiency was 28.21-30.83 % with 65°C temperature. Srivastav, Jain and Das [9] posted dehydration characteristics of green mango slices in re-circulatory tray dryer. The present experiment variable was based on variables studied in research papers and mainly focus on the air recirculation without dehumidifier. Drying temperature ranges from 50°C to 70°C with air velocity of 1 ms^{-1}, 1.5 ms^{-1} and 2 ms^{-1} and air recirculation ratio of 0%, 25%, 50% and 75%.

Sonka et al. [10] reported that large number of papers are published each year related to computer vision system. Many methods was developed in 2000 for image processing and analysis using computer vision system. Sun [11] reported that use of computer vision system in food processing industries increases rapidly in late 21st century. Timmermans [12] report that the computer vision system proved to be effective for measurement of several agriculture products. Lu et al. [13] and Tao et al. [14] found that computer vision system was more efficient and cost effective as compare to manual practice. The growth of computer vision system mainly seen in agriculture related industries [15]. Computer vision system was used in this experiment for image processing. High definition photos were taken and converted to CIE L*a*b* colour value using MATLAB image processing tool. The colour difference (ΔE) between plain potato chips (α) and alum pretreated potato chips (β) were studied.

II. EXPERIMENTAL SETUP

A. Experimental Setup and Procedure

Figure 1 shows the block diagram of setup. The air was supplied to the experimental setup via blower of 0.5 HP. The air then goes to 1 KW rod type (u bend) air heater which had spiral fins on it to ensure maximum heat transfer from heater to the air. Then the air goes to specially designed drying chamber which has eight identical drying chambers of 1 liter where temperature and velocity of forced drying air was maintained same. Plain potato chips (α) was kept in A,B,C and D drying chambers whereas alum pretreated potato chips (β) was kept in E, F, G and H drying chamber. This was done to ensure that if there are any variation occur in the condition of each drying chamber then the present arrangement of drying chamber will ensure that the same variation occur for both set of plain potato chips (α) and alum pretreated potato chips (β). The average of four samples was taken to ensure repeatability of experiment.

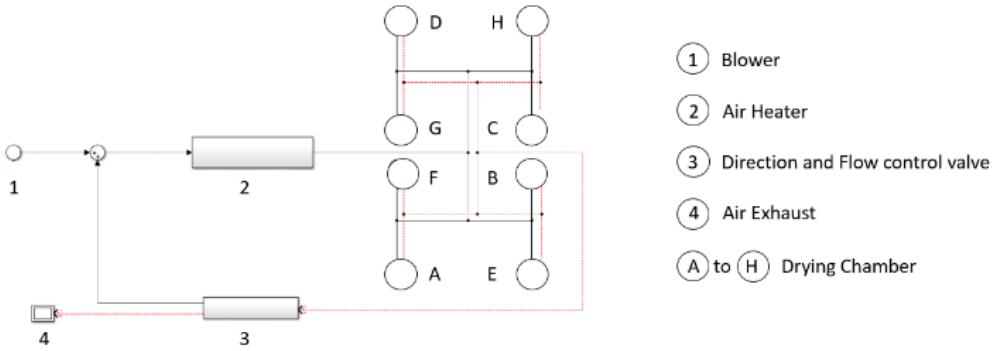

Figure 1 Block Diagram

Photo 1 Experimental Setup

Fresh potato chips about 1 mm were sliced and boiled in salt bath for 10 min to reduce the browning chemical effect. Then half of the chips of same batch was kept in normal drinking water and another half was kept in water which has alum dissolve in it for 1 hour. The ratio of alum powder dissolve in water was 1:1000. Photo 1 shows experimental setup. 50 grams of potato chips was kept in each drying chamber for experimentation. Weight of each same was taken after 15 min for next 2 hours. Photo 2 shows dried potato chips which was dried at 70°C drying air temperature (DAT) with 2 ms^{-1} drying air velocity (DAV) and 0 % air recirculation ratio (ARR).

Figure 2 Potato chips dried at 70°C temperature, 2 ms^{-1} drying air velocity and 0 % air recirculation ratio

B. Data Reduction

Usually potato contain 80% of moisture contain on wet basis [10]. The weight of potato chips was converted into moisture contain by using equation 1. Initial weight (W_i) was subtracted from final weight (W_f) and divided by final weight (W_f) to get moisture contain on wet basis.

$$Product\ moisture\ contain\ (\%\ w.b.) = \left(100 - \left(\frac{W_i - W_f}{W_f}\right)\right) * 80 \quad (1)$$

Iguaz et al. [11] Used Eq. 2 to found out air recirculation ratio. Same equation was used in this experiment.

$$Air\ recirculation\ ratio\ (ARR) = \frac{Volumetric\ flow\ of\ recycle\ air\ stream}{The\ total\ flow\ impelled\ into\ the\ dryer} \quad (2)$$

The difference between pre and post colour coordinate which are ΔL*, Δa* and Δb* was determine by Eq. 3, 4 and 5 respectively.

$$\Delta L^* = L^*_{fresh\ potato\ chips} - L^*_{dried\ potato\ chips} \quad (3)$$

$$\Delta a^* = a^*_{fresh\ potato\ chips} - a^*_{dried\ potato\ chips} \quad (4)$$

$$\Delta b^* = b^*_{fresh\ potato\ chips} - b^*_{dried\ potato\ chips} \quad (5)$$

The colour differences ΔE between pre and post dried potato chips were computed by the equation suggested by Romaniello et al. [18] . The colour difference for plain potato chips (α) and alum pretreated potato chips (β) was given by Eq. 6 and 7 respectively.

$$\Delta E_\alpha = \sqrt{(\Delta L^*_\alpha)^2 + (\Delta a^*_\alpha)^2 + (\Delta b^*_\alpha)^2} \quad (6)$$

$$\Delta E_\beta = \sqrt{(\Delta L^*_\beta)^2 + (\Delta a^*_\beta)^2 + (\Delta b^*_\beta)^2} \quad (7)$$

The difference between the colour change for plain potato chips (α) and alum pretreated potato chips (β) was given by Eq. 8

$$|\Delta E_{\alpha-\beta}| = \Delta E_\alpha - \Delta E_\beta \quad (8)$$

III. RESULTS AND DISCUSSION

Graph 1 shows drying rate of α and β potato chips dried at 50°C with air recirculation ratio of 0% for different drying air velocity. Drying rate of α potato chips found to be 0.4697, 0.4664 and 0.4167 %w.b. per minute for 2 ms^{-1}, 1.5 ms^{-1} and 1 ms^{-1} of drying air velocity. Drying rate of β potato chips found to be 0.4619, 0.4593 and 0.3892 %w.b. per minute for 2 ms-1, 1.5 ms-1 and 1 ms-1 of drying air velocity respectively. Highest drying rate was found for drying air velocity of 2 ms^{-1}. Similar result was observed at 60°C and 70°C drying air velocity. α potato chips dried at rate of 0.4955 and 0.5031 %w.b. per minute for 60°C and 70°C respectively. β potato chips dried at rate of 0.4913 and 0.5016 %w.b. per minute for 60°C and 70°C respectively at 2 ms^{-1}.This clearly indicated that drying rate increases with increase in drying air velocity.

Graph 2 shows drying rate of α and β potato chips dried at drying air velocity of 2 ms^{-1} with air recirculation ratio of 0% for different drying air temperature. Drying rate of α potato chips found to be 0.4664, 0.4955 and 0.5031 %w.b. per minute for 50°C, 60°C and 70°C of drying air temperature. Drying rate of β potato chips found to be 0.4593, 0.4913 and 0.5016 %w.b. per minute for 50°C, 60°C and 70°C of drying air temperature. This indicates that higher drying air temperature leads to faster drying rate. In this experiment, 70°C drying air temperature with drying air velocity of 2 ms^{-1} harvest good drying rate result about 0.5031 and 0.5016 %w.b. per minute for α and β potato chips respectively.

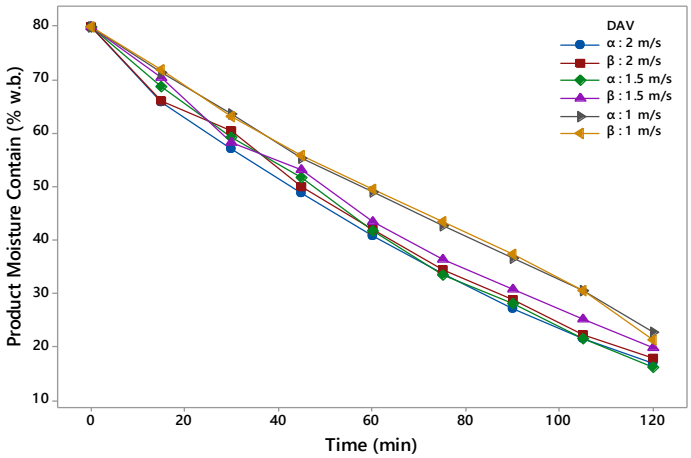

Graph 1 Product Moisture Contain (% w.b.) vs. Time (min) for different velocity at 50°C and ARR 0%

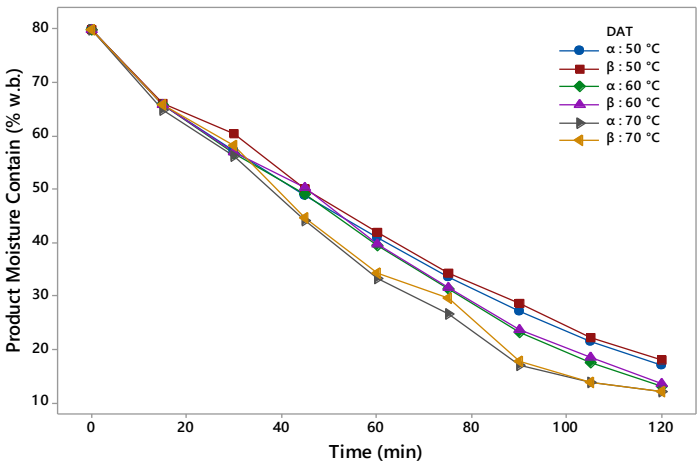

Graph 2 Product Moisture Contain (% w.b.) vs. Time (min) for different temperature at 2 ms^{-1} and ARR 0%

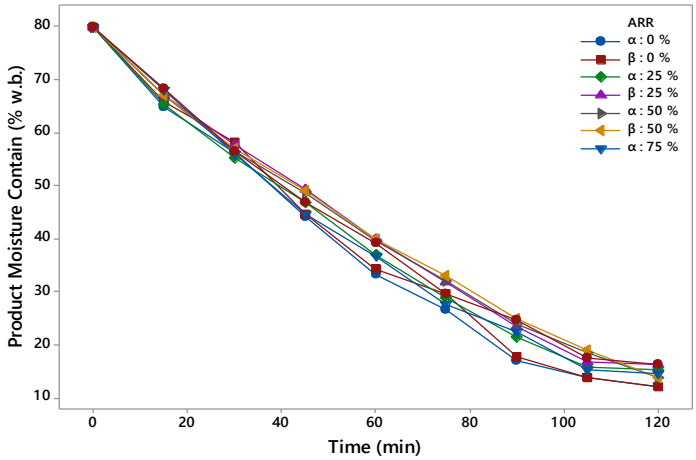

Graph 3 Product Moisture Contain (% w.b.) vs. Time (min) for different Air Recirculation Ratio at 70°C and 2 ms^{-1}

Graph 3 shows drying rate of α and β potato chips dried at drying air velocity of 2 ms^{-1} and at drying air temperature of 70°C for different air recirculation ratio. Drying rate of α potato chips found to be 0.5031, 0.4894, 0.4785 and 0.484 %w.b. per minute for 0%, 25%, 50%, and 75% of air recirculation ratio. Drying rate of β potato chips found to be 0.5016, 0.4963, 0.4706 and 0.4711 %w.b. per minute for 0%, 25%, 50%, and 75% of air recirculation ratio. This indicates that higher air recirculation ratio results in lower drying rate. This is because outlet air relative humidity increases linearly at the beginning but as recirculation ratio increases, a point is reached from which outlet air relative humidity begins to increase exponentially. This describe the reason for greater retention times for higher recirculation ratio [9] [11]. The best drying rate of 0.5031 and 0.5016 %w.b. per minute was achieved for 70°C drying air temperature, 2 ms^{-1} of drying air velocity and 0% air recirculation ratio. The standard deviation among the drying rate of α and β potato chips was found 0.005162 % of w.b. per minute.

Table 1 Colour difference between plain potato chips (α) and alum pretreated potato chips (β) during drying process

S. No.	ΔL^*_α	Δa^*_α	Δb^*_α	ΔL^*_β	Δa^*_β	Δb^*_β	ΔE_α	ΔE_β	$\lvert\Delta E_{\alpha-\beta}\rvert$
1	1.3355	-0.988	-14.8639	0.883	-0.137	-13.7829	14.9241	13.81184	1.112268
2	2.4469	-1.2983	17.4429	2.3235	-1.3701	-17.6559	17.66147	17.86076	0.199283
3	5.2101	-1.9496	-18.3418	5.373	-1.8591	-17.5229	19.16684	18.4222	0.74464
4	9.5536	-3.1346	-19.5292	9.995	-2.9711	-17.6329	21.96558	20.48528	1.4803
5	13.2101	-4.1346	-20.3418	14.314	-3.9721	-18.6412	24.60468	23.83616	0.768524
6	14.375	-4.9956	-20.837	14.2228	-4.0821	-20.8629	25.80262	25.577757	0.225049
7	1.3355	-0.0988	-14.8639	1.672	-0.0951	-14.4769	14.9241	14.57344	0.360659
8	-0.6211	0.5411	-11.2078	0.0239	0.5869	-11.8849	11.23803	11.89941	0.661376

Table 1 shows the random colour inspection of potato chips. The colour inspection contain eight set of plain potato chips (α) and alum pretreated potato chips (β) dried under same drying condition. The difference between the colour change for plain potato chips (α) and alum pretreated potato chips (β) form fresh to dried sample seems to be identical and average variation was found to be 0.69277 which is negligible.

IV. CONCLUSION

In forced convective drying of potato chips, drying rate seems to increase when the velocity and temperature of drying air increases but decreases when air recirculation ratio increases. The reason could be that the drying air relative humidity increases exponentially when exhaust air was mix with the fresh air and hence drying capacity of air decreases. Dehumidifying the exhaust air before mixing with fresh air is suggested so that air relative humidity will increase linearly and hence drying capacity will increases. The drying rate and colour variation of plain potato chips and alum pretreated chips was identical and hence pretreating of potato chips with alum powder does not result in higher drying rate or colour variation.

REFERENCES

[1] W. M. Miller, "In plant study of potential for air recycling in fresh fruit drying," in Florida State Horticultural Society, Lake Alfred, FL, 1980.

[2] T. R. Rumsey, J. F. Thompson and J. Young, "Simulation of fixed bed drying of english walnuts," American Society of Agricultural Engineers, pp. 81-354, 1980.

[3] J. F. Thompson, M. S. Chhinnan, M. M. Miller and G. D. Knutson, "Energy conservation in drying of fruits in tunnel dehydrators," Journal of Food Process Engineering, vol. 4, pp. 155-169, 1981.

[4] J. H. Young, "Energy conservation by partial recirculation of peanuts drying air," Information Systems Division, National Agricultural Library, Washington, D.C, 1984.

[5] H. T. Walker, "Drying cut fruits with recirculated air for energy savings," The University of Tennesse, Knoxville,TN, 1992.

[6] A. G. Meiering, T. B. Daynard, R. Broewn and O. Broewn, "Dryer performance and energy use in corn drying. Canadian Agricultural Engineering," Canadian Agricultural Engineering, vol. 19, no. 1, 1977.

[7] S. A. Giner and A. D. Michelis, "Evaluation of the thermal efficiency of wheat drying in fluidized beds: influence of air temperature and heat recovery," Journal of Agricultural Engineering Research, 41(1), 11–23., vol. 41, no. 1, pp. 11-23, 1988.

[8] A. Iguaza, A. Esnozb, G. Martínezc and A. Lópezb, "Mathematical modelling and simulation for the drying process of vegetable wholesale by-products in a rotary dryer," Journal of Food Engineering, vol. 59, no. 2-3, p. 151–160, 2003.

[9] S. Das, T. Das, S. P. Rao and K. R. J, "Development of an air recirculating tray dryer for high moisture biological materials," Journal of Food Engineering, vol. 50, no. 4, pp. 223-227, 2001.

[10] M. Sonka, V. Hlavac and R. Boyle, "Image Processing, Analysis, and Machine Vision.," PWS publishing, California, USA, 1999.

[11] D. W. Sun, "Inspecting pizza topping percentage and distribution by a computer vision method.," Journal of Food Engineering, vol. 44, pp. 245-249, 200.

[12] A. J. Timmermans, "Computer vision system for on-line sorting of pot plants based on learning techniques," vol. 421, pp. 91-98, 1998.

[13] J. Lu, J. Tan, P. Shatadal and D. E. Gerrard, "Evaluation of pork color by using computer vision," Meat Science, vol. 56, pp. 57-60, 2000.

[14] Y. Tao, C. T. Morrow, P. H. Heinemann and H. Sommer, "Fourier based separation techniques for shape grading of potatoes using machine vision," Transactions of the ASAE, vol. 38, no. 3, pp. 940-957, 1995.

[15] S. Gunasekaran, "Computer vision technology for food quality assurance," Trends in Food Science and Technology, vol. 7, no. 3, pp. 245-256, 1996.

[16] C. T. Kiranoudis, Z. B. Maroulis, E. Tsami and M. D. Kouris, "Equilibrium Moisture Content and Heat of Desorption of Some Vegetables," Journal of Food Engineering, vol. 20, pp. 55-74, 1993.

[17] A. B. Iguaz, B. López and P. Vírseda, "Influence of air recycling on the performance of a continuous rotary dryer for vegetable wholesale by-products," Journal of Food Engineering, vol. 54, no. 4, pp. 289-297, 2002.

[18] R. Romaniello, A. Leone and P. Giorgio, "Measurement of food colour in L*a*b* units from RGB digital image using least squares support vector machine regression," Journal of Agricultural Engineering, vol. 46, no. 4, pp. 138-143, 2015.