FUZZY-GENETIC APPROACH FOR RECONFIGURATION OF ELECTRIC DISTRIBUTION NETWORK

Mr. Ajit B. Kanase[1], Dr. Sachin R. Gengaje[2]
[1] Department of Electronics Engineering, [2]Head, Department of Electronics Engineering
Walchand Institute of Technology, Solapur University, Maharashtra, India.

Abstract— Electric Distribution System has tie and sectionalizing switches. The topological configuration of network is determined by their state. Due to various operational constraints and complex issues electric distribution network reconfiguration is combinatorial optimization problem. This paper presents a multi-objective adaptive fuzzy- Genetic approach to improve the efficiency of radial electric distribution network by reducing active power loss and node voltage deviation. Multiple objectives considered are minimizing the active power loss and minimizing node voltage deviation, subject to a radial network structure in which all loads must be energized. Evaluations of imprecise nature of these two objectives are modeled with fuzzy sets. Adaptive Genetic Algorithm is used to determine the network configuration that optimizes these objectives. The effectiveness of the proposed method is tested with IEEE 33 bus radial distribution system for minimization of system active power loss and reducing node voltage deviation.

Index Terms— Electric Distribution Network, Fuzzy Logic, Genetic Algorithm, Optimization, Reconfiguration.

I. INTRODUCTION

Power distribution systems are usually configured radially, but the act of opening or closing switches or protection devices can possibly change the topology of such systems. In this context, the network is reconfigured to maintain its radial topology and also to reduce power losses at the feeders, to enhance the voltage profile for customers, and to increase the reliability levels. Though there are many options such as reconfiguration, capacitor placement, load feeder balancing, and distributed generation for reducing losses and improving voltage profile in a distribution system, reconfiguration is the most preferred method because it requires no extra equipment to be installed and is cost effective.

In recent years, considerable research has been conducted for loss minimization in the area of network reconfiguration of distribution systems. Various algorithms are proposed and tested for network reconfiguration.

Merlin, et al [1], first proposed reconfiguration for distribution system. For determining minimum loss configuration he used a branch-and-bound-type optimization technique. In this method, meshed network is first formed by closing all network switches. Radial configuration is then restored by opening switches one after another. Based on the method presented by Merlin, et al [1], Shirmohammadi, et al [2], presented heuristic algorithm. In this method also, the optimum flow pattern in the network is established by closing all of the network switches and then opening it one after another. This helped overcoming many approximations of Merlin, et al [1] algorithm.

The heuristic algorithm based on power flow is proposed by Goswami, et al [3]. It has used Shirmohammadi, et al. [2] method to determine the minimum loss configuration of radial distribution networks. To determine a distribution system configuration, simplified formula is developed by Civanlar, et al [4]. To obtain global optimal or, at least near global optimal solutions for reconfiguration of distribution network Chiang, et al [5,6] and Jeon, et al [7] have proposed solution techniques, using simulated annealing. But it is very time consuming. Using simulated annealing technique Jiang, et al [8] have presented an algorithm for switch reconfiguration and capacitor control of distribution system. Lee, et al [9] has proposed a performance index based approach using heuristic rule for resistive loss reduction. Aoki, et al [10] have altogether different approach for this problem. They have formulated it as a discrete optimization problem. Pattern recognizer neural networks are used by Fereidunian et al [11] for distribution reconfiguration algorithm. Wagner, et al [12] has presented comparison of various methods which are applied to network reconfiguration for loss reduction. Many other researchers such as Hsiao, et al [13], Jeon, et al [14], Shin, et al [15], Hsiao [16], Lin, et al [17], Das [18] and Hong, et al [19] etc. have proposed different approaches for network reconfiguration.

Genetic Algorithm which is based upon the mechanics of natural selection and natural genetics is now popularly used to solve optimization problems. It combines the evolutionary process with functional optimization. The characteristics of genetic algorithms make them particularly suited to ill-structured optimization problems. An interesting feature of the GA is that it searches from a population of points and not from a particular search point, so that there is the possibility of obtaining an optimal solution very rapidly. Because of this feature Genetic Algorithms can be effectively used for optimization of electric distribution network.

GA was first applied to the loss minimum reconfiguration problem by Nara *et al.* [20]. In the proposed GA, the genetic strings are defined to represent the branch numbers and the switch position on each arc, and an approximated fitness function was used to represent the system power loss. To improve the performance of the GA, Zhu [21] modified the string structure and fitness function to reduce the string depending on the number of open switches. The fitness function also considered system constraints and an adaptive mutation process that was used to change the mutation probability. Similarly, a refined GA was proposed by Lin *et al.* [22] to take advantage of the optimum flow pattern, genetic algorithm and tabu search method. A competition mechanism based on the fitness value was implemented in the search process to decide whether crossover or mutation was needed for the next step. A tabu list was introduced to define forbidden moves in the searching process. Method based on Genetic Algorithms using a vertex encoding and decoding to determine the network configuration was proposed by Kng-Yi Hong et al. [23]. The vertex based number was used in GA for encoding and decoding the chromosomes.

Recently, a large number of literatures have been published to present their contributions on improving genetic algorithm for solving network reconfiguration problems [24], [25], [26], [27], [28]. The improvements include new codification methods, adaptive operators, and changes in fitness functions.

In the light of the above developments and subject to operational and electric constraints this work formulates the network reconfiguration problem as a multiple objective problem. The fuzzy decision rule for overall satisfaction of all of the objectives may be defined and if we interpret this as a logical "and", we can model it with the intersection of the fuzzy sets. Adaptive Genetic algorithm is then proposed for selection of optimized network configuration. The objectives considered for problem formulation are

1. Minimization of the system power loss.
2. Minimization of the deviations of the nodes voltage.

II. MEMBERSHIP FUNCTIONS FOR DIFFERENT OBJECTIVES

Fuzzy multi-objective method in this paper is developed by D. Das [18]. Each objective in fuzzy domain is associated with a membership function. The degree of satisfaction of the objective is indicated by the membership function. In the crisp theory, the objective is either satisfied or it is not satisfied. If satisfied, membership value is unity and in case of violation it is zero. But in fuzzy sets varying degrees of membership function values can be assigned. It can range from zero to unity. Thus, fuzzy set theory is an extended form of standard set theory.

A. Membership Function for Real Power Loss Reduction (μL_i)

The efficiency of distribution network can be increased by minimizing the active power loss. Therefore, the aim of this fuzzy membership function is to reduce the active power loss of the system.

$$x(i) = \frac{P_{loss(i)}}{P_{loss(0)}} \qquad for\ i = 1,2,3,\dots,N \tag{1}$$

Where, N is population size of genetic algorithm. $P_{loss(i)}$ is the total real power loss of the radial configuration of the system for i^{th} chromosome of the population and $P_{loss(0)}$ is the total real power loss before network reconfiguration.

From equation (1) it can be expressed that if x_i is high, power loss reduction is low and, hence, a lower membership value is assigned and if x_i is low, the power loss reduction is high and a higher membership value is assigned.

The membership function for real power loss reduction is given in Figure 1. From Figure 1, μLi Can be written as

$$\mu L_i = \frac{(x_{max} - x_i)}{(x_{max} - x_{min})}\ ,\quad for\ x_{min} < x_i < x_{max} \tag{2}$$

Where,

$$\mu L_i = 1\ ,\quad for\ x_i \le x_{min}$$

$$\mu L_i = 0\ ,\quad for\ x_i \le x_{max}$$

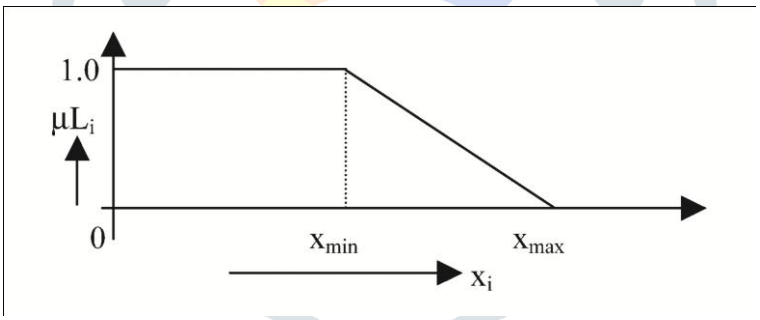

Figure 1: Membership function for power loss reduction.

In this study, it is assumed that x_{min} = 0.5 and x_{max}= 1. This indicates that if the loss is 50% or less of the $P_{loss}(0)$, the unity membership value is assigned and if the loss is 100% or more of $P_{loss}(0)$, the zero membership value is assigned.

B. Membership Function for Maximum Node Voltage Deviation (μV_i)

The aim of this membership function is that the deviation of node voltages should be less. Let us define

$$y_i = max\left|V_{i,j} - V_s\right|,\quad for\ i = 1,2,3,\dots,N\ \ and\ \ j = 1,2,3,\dots,Nb \tag{3}$$

where, N is total number of branches in the loop including the tie branch, Nb is total number of nodes of the system; V_s is voltage of the substation (in per unit); and $V_{i,j}$ is voltage of jth node for the ith chromosome (in per unit) of the population.

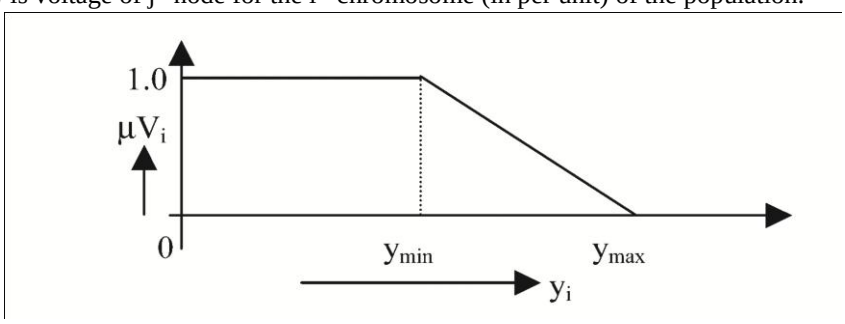

Figure 2: Membership Function for Maximum Node Voltage Deviation

In fuzzy environment of the research, if the maximum voltage deviation is less, then a higher membership value is assigned and if deviation is more, then a lower membership value is assigned. Figure 2 shows the membership function for maximum node voltage deviation. From Figure 2, we can write

$$\mu V_i = \frac{(y_{max} - y_i)}{(y_{max} - y_{min})}, \quad for \quad y_{min} < y_i < y_{max} \tag{4}$$

Where

$$\mu V_i = 1, \quad for \ y_i \leq y_{min}$$
$$\mu V_i = 0, \quad for \ y_i \leq y_{max}$$

In this study, y_{min}= 0.05 and y_{max}= 0.10 have been considered. y_{min}= 0.05 means if the substation voltage is 1.0 per unit, then the minimum system voltage will be 0.95 per unit and if the minimum system voltage is greater than or equal to 0.95 p.u., the unity membership value is assigned. Similarly, if y_{max}= 0.10, the minimum system voltage will be 0.90 per unit and if the minimum system voltage is less than or equal to 0.90 per unit, the zero membership value is assigned.

III. MULTIOBJECTIVE OPTIMIZATION

In many real-world design or decision making problems Global optimization techniques are not just used for finding the maxima or minima of single functions f but they are rather applied to sets F consisting of n = $|F|$ objective functions f_i, each representing one criterion to be optimized.

$$F = \{f_i : \mathbb{X} \rightarrow Y_i : 0 < i \leq n, Y_i \subseteq \mathbb{R}\} \tag{5}$$

Algorithms designed to optimize such sets of objective functions are usually named with the prefix Multi-objective. Vilfredo Pareto 110 years ago has laid the mathematical foundation for multi-objective optimization which considers conflicting criteria in a fair way. Pareto optimality became an important notion in economics, game theory, engineering, and social sciences. It defines the frontier of solutions that can be reached by trading-off conflicting objectives in an optimal manner. From this front, a decision maker either a human or an algorithm can finally choose the configurations that, in his opinion, suit best. The notation of optimal in the Pareto sense is strongly based on the definition of domination.

An element x_1 dominates an element x_2 if x_1 is better than x_2 in at least one objective function and not worse with respect to all other objectives.

An element $x^* \in \mathbb{X}$ is Pareto optimal and hence, part of the optimal set X^*, if it is not dominated by any other element in the problem space $\mathbb{X}$. In terms of Pareto optimization, $X^\star$ is called the Pareto set or the Pareto Frontier.

IV. FUZZY FITNESS FUNCTION

When there are multiple objectives to be satisfied simultaneously, it is required to find Pareto Optimal solution. One solution methodology for the multi-objective optimization in fuzzy framework can be performed by using max–min principle [29-30]. It is described as follows.

1. The Membership values of all the different objectives are evaluated for each chromosome of the population.
2. The degree of overall satisfaction for this option is the minimum of all the above membership values.

Now, a fuzzy decision for overall satisfaction may be defined as the choice that satisfies all of the objectives and if we interpret this as a logical "and", we can model it with the intersection of the fuzzy sets then it is given by

$$D_i = min \{ \mu Li, \mu Vi \}, \quad for\ i = 1,2,...N \tag{6}$$

Where N is population size.

3. The optimal solution OS_k is the maximum of all such overall degrees of satisfaction. In the present work, the classical fuzzy set union is used and the fuzzy decision for an optimal solution is then given by

$$OS = max \{ D_i \}, \quad for\ i = 1, 2, ..., N \tag{7}$$

Where is N is population size.

V. GENETIC ALGORITHM

Neural Networks, Machine Learning and Evolutionary Computation are the most popular optimization tools employed in engineering applications. Genetic Algorithm is the most popular and prominent member of the Evolutionary Computation family. Genetic Algorithms make use of the idea of natural selection to evolve the population of chromosomes which is the candidate solution to the given problem. Selection, crossover and mutations are the operators used by genetic algorithm to find most appropriate solution for the problem. According to the principal of survival of the fittest, the selection operator selects the chromosome based on their fitness value. Diversity of the population is maintained by the crossover and mutation operators. Procedure to solve the network reconfiguration problem by using adaptive genetic algorithm is explained as below.

Step1. Read system data for distribution test system.
Step2. Set parameters for genetic algorithm like population size, cross over and mutation rate and maximum generation.
Step3. Generate N chromosomes randomly as an initial population.
Step4. Run the load flow program.
Step5. Compute fitness value of each chromosome in the population.
Step6. Compute average fitness value of population, and find distance between best fitness value and average value.
Step7 Depending on distance adjust crossover rate so as to maintain diversity and to speed up evolution of fit generation.

Step8 Apply adopted crossover and mutation rate to generate new population.
Step7. Check for the stopping criteria. If not reached repeat step4 to step8, otherwise specify the fittest chromosome.
Step8. Stop.

VI. EXPLAINATION OF PROPOSED METHOD

Proposed algorithm is explained by using standard IEEE 33 Bus system which is as shown in Fig. 3. It is assumed that every branch has a sectionalizing switch. This system has one feeder, five tie branches, and five tie switches. Sectionalizing switches are normally close and tie switches are normally open.

The Chromosome encoding strategy adopted here is based on number of tie branches. As for the test case there are 5 tie branches chromosome consists of five genes. Each gene presents the branch number which is to be opened. If more than one branch in a loop is open then relevant chromosome represents the configuration that is not radial. This coding method is more fast and efficient than branch and node based coding strategy where chromosome has 37 and 33genes. In present study chromosome will be represented as CH = [33, 34, 35, 36, 37] which means all branches except 33, 34,35,36,37 are open. Here initial population size is taken to be 100, which represents 100 possible network configurations and evolution will be carried up to 100 generations, which will be stopping criteria.

The load flow is run which is based on Newton-Rapshon method as elaborated in [31]. Then roulette wheel selection method is used to select more fertile chromosomes with best fitness (lower power loss and minimum node voltage deviation). Cross over probability set initially is 0.6 with one point crossover and mutation probability used is 0.01.

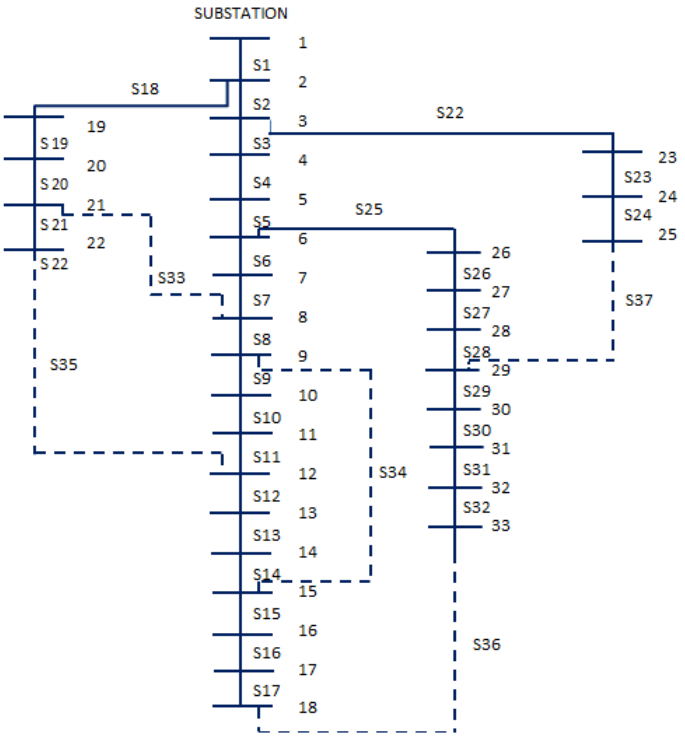

Figure 3: IEEE 33 Bus

The fittest chromosome will have higher probability to be selected for next generation. To compute fitness probability first fitness of each chromosome is computed using equation (6). The probability of each chromosome is formulated as

$$P[i] = Fitness[i] / Total \quad \text{for } i^{th} \text{ chromosome.} \tag{8}$$

After computing cumulative probability, chromosome selection is performed by using roulette wheel selection. It gives the fittest population of chromosomes for next generations. Now one point crossover is performed taking crossover rate of 0.6. Pseudo code for crossover process is as follows.

```
Start
        k=0;
        While (k<population) do
                R[k]=random(1-0);
                If
                        (R[k] < crossover rate)

                then
                        Select Chromosome[k] as parent;
                End
                k=k+1;
        End;
End;
```

After selecting chromosome for crossover, next process is to determining position of crossover point. This is done by generating random numbers between 1 to (length of chromosome-1). In this case random number should be between 1 and 4. After getting crossover point, parent chromosome will be cut at crossover point and its generation will be interchanged.

Number of chromosomes that have mutation in population is determined by mutation rate. Mutation process is done by replacing the gene at random position with a new value. The process is as follows. First calculate the total length of gene in the population using formula

Total Length of Gene= no. of gene in a chromosome* number of population (9)

In this case it is 500. As in this case mutation rate is 0.02, 10 genes (500*0.02) can be mutated. Now generate 10 random numbers between 1 to 500. These numbers will specify gene number to be muted. Suppose first two random numbers out of these 10 numbers are 2 and 25. It means 2nd gene of first chromosome and 5th gene of 5th chromosome is to be mutated. Then 10 random values between 1 to 37 are generated which are to be substituted in selected 10 genes. This will lead to the next generation of population. This process is repeated for 100 generations where it is expected to get the best population and fittest chromosome of that population will be the optimum solution.

After first generation concept of adaptive crossover rate is introduced. The process of adaptive crossover rate is explained below.

- Calculate average fitness value of the generation.
- Find the distance between the best fitness value and the average fitness value.
- If distance is less it means all the chromosomes are covering to the one individual which will increase risk of falling into a local optimum.
- If distance is less than pre-defined critical distance then increase crossover rate to increase diversity of population.
- This self-tuning is continued till the stopping criteria is reached

VII. RESULTS

Simulation and testing of proposed algorithm is done in MATLAB with IEEE 33 Bus system. It is radial distribution system with one feeder, having nominal voltage of 12.66kv, power base is 10MVA and all loads are balanced. It has 32 sectionalizing branches and 5 tie branches. Line and load data is provided in Appendix A.

Before network reconfiguration, tie switches were 33, 34,35,36,37. The total real power loss of this system was 208.45 kW. The minimum node voltage was 0.91p.u. Fig. 4 shows the final radial configuration of the system where tie switches is 7, 9, 14, 32, 37. After reconfiguration, the total real power loss is 130.93 kW. The minimum node voltage is 0.9439p.u.

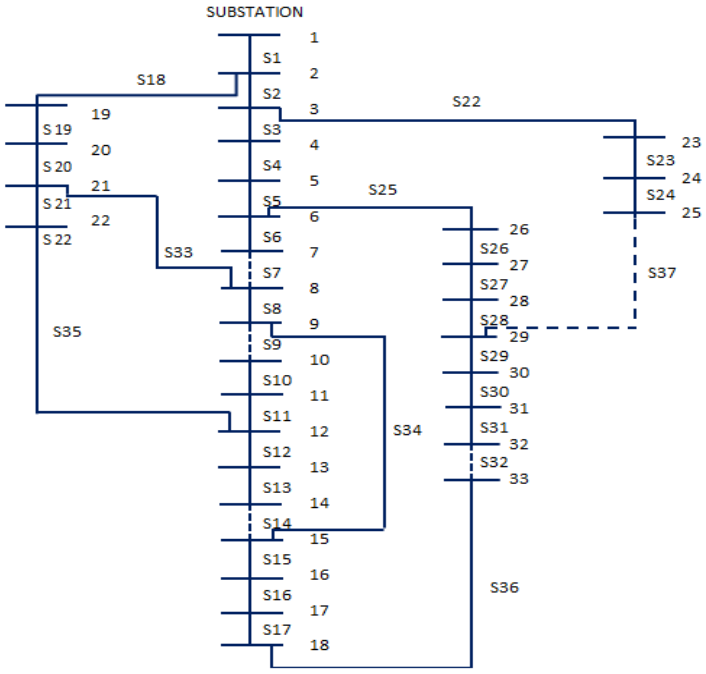

Figure 4. Bus Structure After Reconfiguration

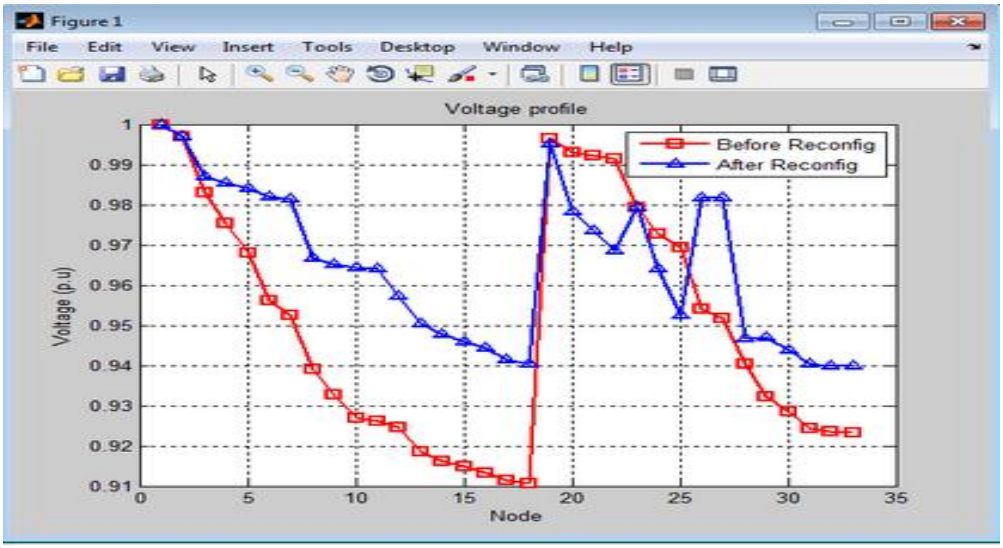

Figure 5: Voltage Profile

This clearly shows reduction of system power loss by 37.17% and improvement in node voltage deviation from 0.91pu to 0.94 pu. Table 1 gives detailed result along with tie switches before and after reconfiguration. System voltage profile is shown in Fig.5.

Table 1. Simulation Result

Simulation Results		
	Before Reconfiguration	After Reconfiguration
Tie Switches	33, 34, 35, 36, 37	7, 9, 14, 32, 37
Power Loss	208.45 kw	130.93 kw
Power Loss Reduction Percentage		37.17
Minimum Node Voltage	0.91075 pu.	0.9439 pu.
Time		4.78Sec.

VIII. CONCLUSION

To solve network reconfiguration problem multi-objective adaptive fuzzy genetic algorithm has been proposed in present work. The objectives considered are minimization of real power loss and minimization of the deviations of nodes voltage, subject to maintenance of the radial network structure. It is possible to consider few other objectives like minimization of branch current constraint violation and load balancing for optimization. The proposed genetic algorithm also attempts to reduce chromosome length which results in reduction in computational time. The self-tuning feature of crossover rate improved the diversity of generation there by increasing possibility of getting best solution. This feature can also be applied to adjust mutation rate. This simulation results have proved the feasibility of the proposed algorithm. The obtained results are quite encouraging which suggests the implementation of the strategy on a large-size distribution network.

REFERENCE

[1] Merlin, A., Back, H., "Search for a Minimal Loss Operating Spanning Tree Configuration in an Urban Power Distribution System", *Proc. 5th Power System Computation Conf*., Cambridge, U.K., (1975), 1-18.

[2] Shirmohammadi, D., Hong, H.W., "Reconfiguration of Electric Distribution Networks for Resistive Line Loss Reduction", *IEEE Trans. Power Deliv*., (1989), Vol. 4, No. 1, 1492-1498.

[3] Goswami, S.K. and Basu, S.K., "A New Algorithm for Reconfiguration of Distribution Feeders for Loss Minimization", *IEEE Trans. Power Del*., Vol. 7, No. 3, (July 1992), 1484-1491.

[4] Civanlar, S., Grainger, J.J., Yin, H., Lee, S.S.H., "Distribution Feeder Reconfiguration for Loss Reduction", *IEEE Trans. Power Deliv*., Vol. 3, No. 3, (1988), 1217-1223.

[5] Chiang, H.D. and Jean-Jameau, R.M., "Optimal Network Reconfiguration in Distribution Systems, Part 1: A New Formulation and a Solution Methodology", *IEEE Trans. Power Deliv*., Vol. 5, No. 4, (1990), 1902- 1909.

[6] Chiang, H.D. and Jean-Jameau, R.M., "Optimal Network Reconfigurations in Distribution Systems, Part 2: Solution Algorithms and Numerical Results", *IEEE Trans. Power Deliv*., Vol. 5, No. 3, (1990), 1568-1574.

[7] Jeon, Y.J., Kim, J.C., Kim, J.O., Shin, J.R. and Lee, K.Y., "An Efficient Simulated Annealing Algorithm For Network Reconfiguration In Large-Scale Distribution Systems", *IEEE Trans. Power Deliv*., Vol. 17, No. 4, (2002), 1070-1078.

[8] Jiang, D. and Baldick, R., "Optimal Electric Distribution System with Switch Reconfiguration and Switch Control", *IEEE Trans. Power Syst*., Vol. 11, No. 2, (May 1996), 890-897.

[9] Lee, T.E., Cho, M.Y. and Chen, C.S., "Distribution System Reconfiguration to Reduce Resistive Losses", *Int. J. Electric Power System Research*, Vol. 30, (1994), 25-33.

[10] Aoki, A., Ichimori, T. and Kanezashi, M., "Normal State Optimal Load Allocation in Distribution Systems", *IEEE Trans. Power Deliv*., Vol. 2, No. 1, (1987), 147-155.

[11] Fereidunian, A.R., Lesani, H. and Lucas, C., "Distribution Systems Reconfiguration using Pattern Recognizer Neural Networks", *International Journal of Engineering, Transactions B: Applications*, Vol. 15, No. 2, (2002), 135-144.

[12] Wagner, T.P., Chikhani, A.Y. and Hackam, R., "Feeder Reconfiguration for Loss Reduction", *IEEE Trans.Power Deliv*., Vol. 6, No. 4, (1991), 1922-1933.

[13] Hsiao, Y.T. and Chien, C.Y., "Multi-Objective Optimal Feeder Reconfiguration", ***IEE Proc. Genr., Trans., Distrib***., Vol. 148, (2001), 333-336.

[14] Jeon, Y.J. and Kim, J.C., "Application of Simulated Annealing and Tabu Search for Loss Minimization in Distribution Systems", *Int. J. Electrical Power and Energy Systems*, Vol. 26, (2004), 9-18.

[15] Shin, D.J., Kim, J.O., Ki, T.K., Choo, J.B. and Singh, C., "Optimal Service Restoration and Reconfiguration of Networks using Genetic and Tabu Search Algorithm", *Int. J. Electric Power System Research*, Vol. 71, (2004), 145-152.

[16] Hsiao, Y.T. "Multi-Objective Evolution Programming Method for Feeder Reconfiguration", ***IEEE Trans. On Power Syst.***, Vol. 19, No. 1, (2004), 594-599.

[17] Lin, V.H., Chen, C.S., Wu, C.J. and Kang, M.S., "Application of Immune Algorithm to Optimal Switching Operation for Distribution Loss Minimization and Loading Balance", ***IEE Proc. Genr. Trans.Distrib***., Vol. 150, (2003), 183-189.

[18] Das, D., "A Fuzzy Multiobjective Approach for Network Reconfiguration of Distribution Systems", *IEEE Trans. Power Deliv*., Vol. 21, No. 1, (2006), 202-209.

[19] Hong, Y.Y. and Ho, S.Y., "Determination of Network Configuration Considering Multi-Objective in Distribution Systems using Genetic Algorithm", *IEEE Trans. On Power Syst.*, Vol. 20, No. 2, (2005), 1062-1069.

[20] K. Nara, A. Shiose, M. Kitagawa, and T. Ishihara, "Implementation of genetic algorithm for distribution systems loss minimum re-configuration," *IEEE Trans. Power Syst.*, vol. 7, no. 3, pp. 1044–1051, 1992.

[21] J. Z. Zhu, "Optimal reconfiguration of electrical distribution network using the refined genetic algorithm," *Electr. Power Syst. Res.*, vol. 62, no. 1, pp. 37–42, May 2002.

[22] L.in Lu, Q. Luo, J. Liu, and C. Long, "An Improved Particle Swarm Optimization for Reconfiguration of distribution Network," *2008 Fourth Int. Conf. Nat. Comput.*, pp. 453–457, 2008.

[23] Kng-Yi Hong, "Genetic Algorithm Based Network Reconfiguration for Loss Minimization in Distribution Systems",*IEEE Trans. Evol.Comput*. vol 11, no. 1, pp. 91-100, 2007.,

[24] K. Prasad, R. Ranjan, N. C. Sahoo, and A. Chaturvedi, "Optimal Reconfiguration of Radial Distribution Systems Using a Fuzzy Mutated Genetic Algorithm," *IEEE Trans. Power Deliv.*, vol. 20, no. 2, pp. 1211–1213, Apr. 2005.

[25] L. M. O. Queiroz and C. Lyra, "Adaptive Hybrid Genetic Algorithm for Technical Loss Reduction in Distribution Networks Under Variable Demands," *IEEE Trans. Power Syst.*, vol. 24, no. 1, pp. 445–453, Feb. 2009.

[26] J. Mendoza, R. Lopez, D. Morales, E. Lopez, P. Dessante, and R. Moraga, "Minimal Loss Reconfiguration Using Genetic Algorithms With Restricted Population and Addressed Operators: Real Application," *IEEE Trans. Power Syst.*, vol. 21, no. 2, pp. 948–954, May 2006.

[27] H. D. De Macedo Braz and B. A. De Souza, "Distribution network reconfiguration using genetic algorithms with sequential encoding: Subtractive and additive approaches," *IEEE Trans. Power Syst.*, vol. 26, pp. 582–593, 2011.

[28] R. T. Ganesh Vulasala, Sivanagaraju Sirigiri, "Feeder Reconfiguration for Loss Reduction in Unbalanced distribution System Using Genetic Algorithm," *Int. J. Electr. Electron. Eng.*, vol. 3, pp. 754–762, 2009.

[29] L. Zadeh, "Fuzzy sets," in *Inf. Contr.*, vol. 8, 1965, pp. 338–353.

[30] H. J. Zimmermann, "Fuzzy programming and linear programming withseveral objective functions," in *TIMS/Studies in the Management Sciences*Amsterdam, North Holland, 1984, vol. 20, pp. 109–121.

[31] Rakesh Ranjan and Das , "Simple and Efficient Computer Algorithm to Solve Radial Distribution Networks", *Electric Power Components and Systems*, 31:1, 95-107, DOI:10.1080/15325000390112099

APPENDIX

Table A1. Load data for 33-bus distribution system

Bus No.	P_L (kW)	Q_L (kVAr)	Bus No.	P_L (kW)	Q_L (kVAr)	Bus No.	P_L (kW)	Q_L (kVAr)	Bus No.	P_L (kW)	Q_L (kVAr)
2	100	60	10	60	20	18	90	40	26	60	25
3	90	40	11	45	30	19	90	40	27	60	25
4	120	80	12	60	35	20	90	40	28	60	20
5	60	30	13	60	35	21	90	40	29	120	70
6	60	20	14	120	80	22	90	40	30	200	100
7	200	100	15	60	10	23	90	50	31	150	70
8	200	100	16	60	20	24	420	200	32	210	100
9	60	20	17	60	20	25	420	200	33	60	40

Table A2. System data for 33-bus distribution system

Branch No.	Sending End	Receiving End	R (Ω)	X (Ω)	Branch No.	Sending End	Receiving End	R (Ω)	X (Ω)	Branch No.	Sending End	Receiving End	R (Ω)	X (Ω)
1	1	2	0.0922	0.0470	11	11	12	0.3744	0.1298	21	21	22	0.7089	0.9373
2	2	3	0.4930	0.2512	12	12	13	1.4680	1.1549	22	3	23	0.4512	0.3084
3	3	4	0.3661	0.1864	13	13	14	0.5416	0.7129	23	23	24	0.8980	0.7091
4	4	5	0.3811	0.1941	14	14	15	0.5909	0.5260	24	24	25	0.8959	0.7071
5	5	6	0.8190	0.7070	15	15	16	0.7462	0.5449	25	6	26	0.2031	0.1034
6	6	7	0.1872	0.6188	16	16	17	1.2889	1.7210	26	26	27	0.2842	0.1447
7	7	8	0.7115	0.2351	17	17	18	0.7320	0.5739	27	27	28	1.0589	0.9338
8	8	9	1.0299	0.7400	18	2	19	0.1640	0.1565	28	28	29	0.8043	0.7006
9	9	10	1.0440	0.7400	19	19	20	1.5042	1.3555	29	29	30	0.5074	0.2585
10	10	11	0.1967	0.0651	20	20	21	0.4095	0.4784	30	30	31	0.9745	0.9629
31	31	32	0.3105	0.3619	32	32	33	0.3411	0.5302	33	25	29	0.5000	0.5000
34	8	21	2.0000	2.0000	35	12	22	2.0000	2.0000	36	9	15	2.0000	2.0000
37	18	33	0.5000	0.5000										