IoT Based Remote Monitoring Smart Grid

Nandyala Sreeramula Reddy[1] P.MOUNIKA SHAIK[2] MOHAMMED SULTAN[3] K.MOUNIKA[4] K.NAGASAINATH[5]
1 Asst.Professor, Dept of EEE, AITS Rajampet,
2,3,4,5 Undergraduate Students, Dept of EEE ,AITS Rajampet.

***Abstract*— Smart grid represents one of the most promising and prominent internet of things applications. It is energy consumption monitoring and management system. Smart grids are based on communication between the provider and consumer. One of the main issues with today's outdated grid deal with efficiency. The grid becomes overloaded during peak times or seasons, by using smart grid consumer and owner gets daily electricity consumption.**

The system communicates over internet by using Wi-Fi technology. A bulb is used in this project to demonstrate as a valid consumer and another bulb to demonstrate an invalid consumer. The foremost thing that this project facilitates is re-connection of transmission line to active grid .If an Energy Grid becomes overloaded and there is an another Energy Grid, the system switches the Transmission Lines towards this Grid thus facilitating uninterrupted electricity supply to that particular region whose Energy Grid went OFF, and this information of which Grid is active is updated over THING SPEAK webpage where the authorities can login and can view the updates. Apart from monitoring the Grid this project has advances capabilities of monitoring energy consumption. The amount of electricity consumed and the estimated cost of the usage gets updated on the THING SPEAK webpage along with the Energy Grid information.

Keywords—Boost; DC-DC converter; floating output; fuel cell; high-gain; multilevel converter.

I. INTRODUCTION

Internet of Things (IOT) is a concept and a paradigm that considers pervasive presence in the environment of a variety of things/objects that through wireless and wired connections and unique addressing schemes are able to interact with each other and cooperate with other things/objects to create new applications/services and reach common goals. The goal of the Internet of Things is to enable things to be connected anytime, anyplace, with anything and anyone ideally using any path/network and any service. Internet of Things is a new revolution of the Internet. Objects make themselves recognizable and they obtain intelligence by makingor enabling context related decisions thanks to the fact that they can communicate information about themselves. They can access information that has been aggregated by other things, or they can be components of complex services. Smart cities are complex environments where several areas of innovation meet in order to substantially improve socioeconomic development and quality of life.

Neither is nuclear energy a future proof option. Inconsequence future energy supply needs to be based largely on various renewable. Figure.2 Smart grid connectivity enabling smart home service.

Increasingly focus must be directed to our energy consumption behaviour. Because of its volatile nature such supply demands an intelligent and flexible electrical grid which is able to react to power fluctuations by controlling electrical energy sources (generation, storage) and sinks (load, storage) and by suitable reconfiguration. Such functions will be based on networked intelligent devices (appliances, micro-generation equipment, infrastructure, consumer products) and grid infrastructure elements, largely based on IoT concepts. A smart grid is an energy delivery system that moves from a centrally controlled system, like we have today, to a more consumer driven, iterative system relying on bi-directional communication to constantly adapt and tune the delivery of energy.

There are limitations on most of the energy resources on Earth, and we are beginning to better understand that. As such, we are learning to appreciate the value of better and more efficiently consume our energy resources and incorporate sustainable forms of energy into our lives. Smart grids can better accommodate these needs.

We all want to live in a more comfortable fashion, but not without going broke along the way. Smart grids hold the promise of enabling greater comfort without requiring greater expense; at least long term. Figure 1.1 shows smart grid representation.

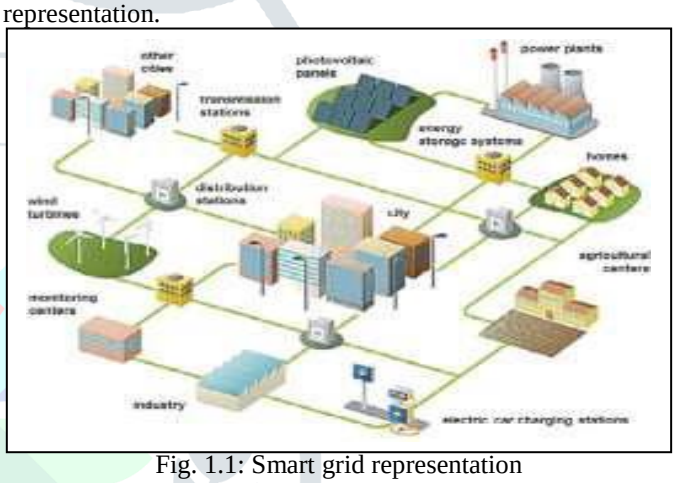

Fig. 1.1: Smart grid representation

There is increasing public awareness about the changing paradigm of our policy in energy supply, consumption and infrastructure. For several reasons future energy supply should no longer be based on fossil resources.

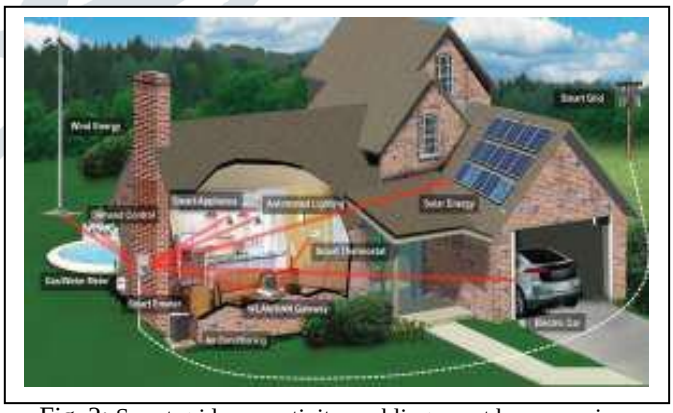

Fig..2: Smart grid connectivity enabling smart home service.

II. CIRCUIT DESCRIPTION

A. Block Diagram

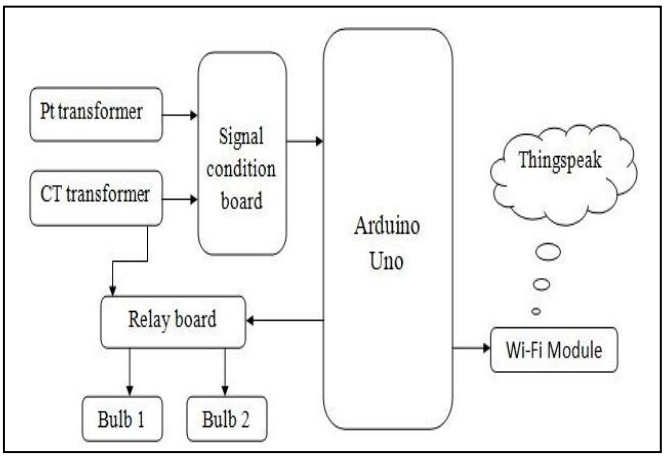

Fig.3 Block Diagram

Smart grid is energy consumption monitoring and management system. The three basics features of smart grid are:

1. Consumer and owner get clarity of electricity consumption readings.
2. Owner can cut electricity supply remotely through internet if dues/bills are not paid.
3. The data collected form smart meters cannot be access by unauthorized entities. In case energy theft is happened the owner and consumer get message to take necessary action.

B. Hardware Requirements

1. Arduino microcontroller
2. IR sensor
3. LCD
4. Relay
5. Energy meter
6. Load

III. HARDWARE DESCRIPTION

In circuit, we give 230v supply as AC input to meter. Input part and output part of meter each have one phase and one neutral port this output phase wire connected to load (bulb) through relay. Relay by default is in close condition. Circuit starts working when relay is in close condition. But if relay triggered then relay will get open and immediately circuit stops working. In meter circuit, LED gives pulse according to value of load. On meter Cal means calibration is written. When LED gives 3200 impulse, means 1 kw-hour unit is get consumed. Means when LED blinks for 3200 times 1 unit will get consumed. For now to save time we take 1 pulse equal to 1 unit. To catch LED pulse there is one photodiode is connected next to LED. Signal of photodiode is very week so transistor (BC549NPN) is connected near to photodiode to amplify the signal. Output of collector connected to A0 pin of microcontroller. So microcontroller count the pulses from optical sensor which is connected to A0 pin.

Fig.4 Prototype Implementation

IV. RESULTS

The proposed project was implemented as prototype. The system communicates over internet by using Wi-Fi technology. A bulb is used in this project to demonstrate as a valid consumer and a bulb to demonstrate an invalid consumer. The foremost thing that this project facilitates is re-connection of transmission line to active grid.

If an Energy Grid becomes faulty and there is an another Energy Grid, the system switches the Transmission Lines towards this Grid thus facilitating uninterrupted electricity supply to that particular region whose Energy Grid went OFF.

fig5. Thing speak webpage

It needs username and password to login into ID. Then, it shows the information about the Entries, Updates about the results.

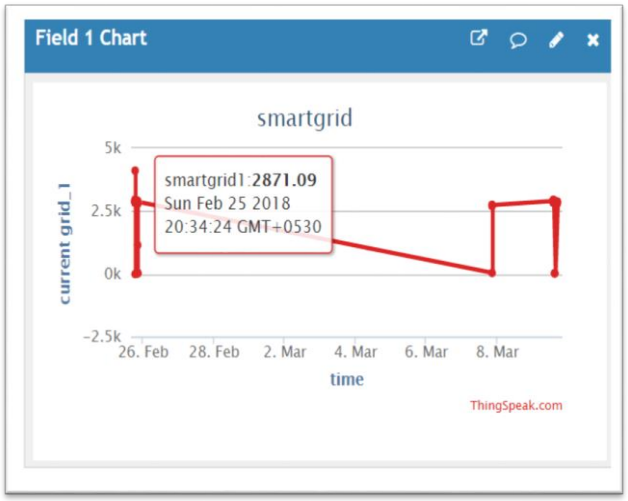

Fig.6. smart grid 1 consumptions

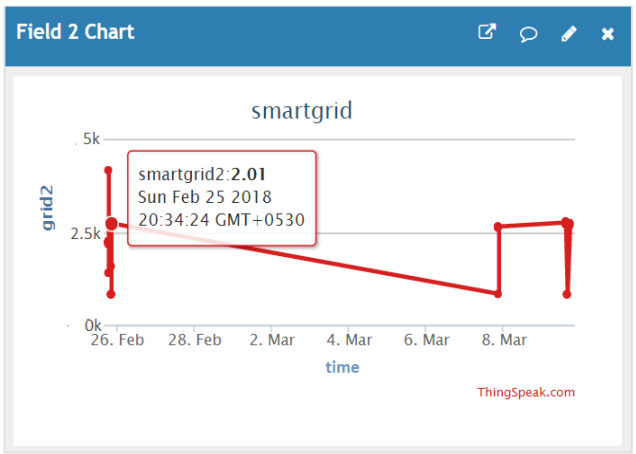

Fig.7. smart grid 2 consumptions and load sharing.

Fig.8. Load sharing.

Above figures shows the current and time characteristics of grid 1 and grid 2. When the load is switched ON grid 1 comes to ON state for satisfying load demand and when grid 1 is overloaded, load sharing will takes place with grid 2.

V. CONCLUSION

Smart grid represents one of the most promising and prominent internet of things applications. Smart Grid is owner as well as user friendly technology. User can check daily consumption from any location using internet. More efficient transmission of electricity, quicker restoration of electricity after power disturbances, reduced operations and management costs for utilities, and ultimately lower power costs for consumers, time saving technology. Smart Grid (SG) is the future grid which solves the problems of unidirectional information flow, energy wastage, growing energy demand, reliability and security in the traditional power grid. The Internet of Things (IoT) technology provides connectivity anywhere and anytime. It helps smart grid by providing smart devices or IoT devices for the monitoring, analysis and controlling the grid, as well as connectivity, automation and tracking of such devices. This realizes the IoT- aided smart grid system which supports and improves various network functions at the power generation, transmission, distribution, and utilization.

REFERENCES

[1] Dr. Ovidiu Vermesan and Dr. Peter Friess ,"Internet of Things Strategic Research and Innovation Agenda “in Internet of Things: Converging Technologies for Smart Environments and Integrated Ecosystems, River Publishers,Denmark,2013,pp.9-30.

[2] Rajiv .K. Bhatia and Varsha Bodade, "Smart Grid Security and Privacy: Challenges, Literature Survey and Issues", International Journal of Advanced Research in Computer Science and Software Engineering, Volume 4, Issue 1, January 2014.

[3] Stamatis Karnouskos, "The cooperative Internet of Things enabled Smart Grid", SAP Research, Vincenz-Priessnitz- Strasse 1, D-76131, Karlsruhe, Germany,2013.

[4] David Chaves,Alexandre Pellitero and Daniel Garcia, “Providing IoT Services in Smart Cities through Dynamic Augmented Reality Markers",sensors,ISSN1424-8220,Published:3July2015

[5] V. Dehalwar, R. K. Baghel, M. Kolhe. Multi-Agent based Public Key Infrastructure for Smart Grid, the 7th International Conference on Computer Science & Education (ICCSE 2012) July, 2012. Melbourne, Australia.