UPS battery management using IOT

[1]Aman Dosi, [2]Aditya Singh,
[1,2]B.Tech. Student, Department Of Electrical And Electronics Engineering
[1]Name of Department of 1st Author,
1SRM Institute Of Science and Technology

Abstract : In this paper we have Battery Management framework essentially used to gauge the execution of battery. They have some normal run time under release condition. So fundamentally it is characterized as the present normal is originated from the battery duplicated with it and when it takes more to reach to safe cut purpose of their battery. There are two things that is normal release condition and the term. They are straightforwardly propotional to one another. Utilizing the normal current and the time increased the entire procedure is finished. In the event that we need to use as effective and minimal effort, at that point we use to quantify these incentive by the microcontroller In like arduino. Arduino used to decide normal release current and record time to the ah battery. By utilizing standard battery datasheet there is some legitimate side road voltage and it is resolved to be 2.3 . the voltage is puted on the matlab purchase utilizing a CSV document and its made by the best screen and having printout from the microcontroller.

IndexTerms - Battery, Aruino, Microcontroller, MOSFET.

I. INTRODUCTION

Essentially deciding the execution of battery is imperative for quality control and battery the executives framework for a few organization. Vitality like Renewable vitality is need elite batteries that Can without much of a stretch be productively and viably store in vitality. According to the age the interest for battery the board is as of now step by step and developing endlessly and help to accomplish for best productivity for their business sectors. It is decide likewise that to what extent the battery works. It ought to be by and large execution is exceptionally great. The estimation will demonstrate the continuous for the rest of the CHARGE OF THE BATTERY.

When we attempt to decide the rating of the amp Hour evaluations at that point there are two required numbers. The Ah rating is equivalent to the normal release which is increased when . in the event that the amp appraisals is higher, at that point it have long battery life and it has under in the release current. What's more of voltage the test is required with the goal that battery isn't get released. In the event that any release condition is apply, at that point lithium based is apply and decide for the battery. For some situation it will be unsafe. In the event that we do blend of battery datasheets, at that point the cutoff voltage test is resolved. To decide the limit of battery that is both sheltered and effective. This is accomplished that when our consistent obstruction over the battery is accomplished when the limit voltage is achived. After that the arduino computes the run time and the release current over a period given under the fixed voltage .

Acquiring the fixed release current is tad troublesome. So from seen that it will chose that measure the normal release current after some time give a fixed obstruction and evolving voltage. In This expansion of potentiometers that are admirably utilized in codes go about as a cradle for both voltage and resister esteems. This will permitted both the qualities changed amid the trial of one hundredth to affirms its exactness. So there are numerous item in this which is use to release current, for example, BTC100. Their range quality is in from $20 to $30 and having an equivalent voltage at greater expense. The release current is around the half ampere. It occurred for the long span time. The system is provide about the higher average discharge current it have greatly decreasing test time.it easy to maintain if we keep resistance constant compare to the fixed the fixed amount of current so from that no additional things is been introduced. The system provides the gud calibration which is provide the correct value from having a good touch and from that we also know that how much it will work in fine way. Its possible to introduce such varying load which is simulating an un ideal loads.

II. HARWARE AND SOFTWARE SUBSYSTEM

As we get steady load on a battery 5W and 1.4 having a resister value and were used to obtain the lowcharge current of battery. The main thing is that is tolerance level of 2.6% gave us a range between 0.07 OHM which will gives a major impact on the result. In the lab using the apparatus it was determine that total resistance between two parallel resistors was around 1.3 OHM and we included resistance here in PCB and wires. The main thing is that it will be adjustable because of the higher current to handle. It takes time under the hour and half. In that to handle the higher current we use the n-Channel power MOSFET was used for switching the load as ON and OFF. If you will look in the below diagram than you will easily get the pint. Battery discharge current was measured by the calculation of analog read of the battery. The average Current will be determine in real time for the After calculation. Once a voltage and current and a average current is recorded and then it will export in the way of output to a CSV file to be inputted in to a matlab for making a graphing.

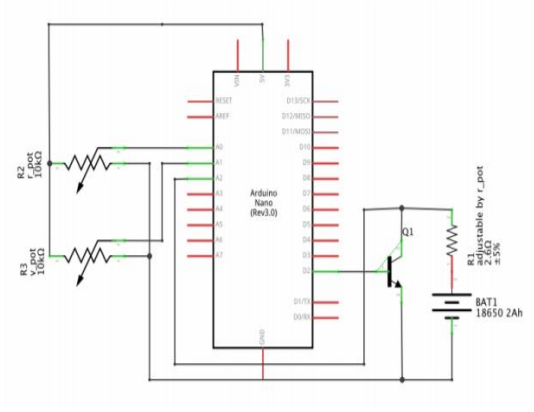

Fig.1 Design for the battery using arduino

The demonstrated circuit was the last plan after that recovering temperamental qualities utilizing breadboard. On the off chance that we contrasting computerized meter readings and the arduino readings, at that point the appalling mistake issue is found here.

If we get the in accurate readings then it will directly gives effect on current calc. there by making a test unconclusive. Therefore there are two potentiometer is added so from that we get the easily correct or smooth values during the test and to confirm accuracy and then PCB is implified. To record the estimations of cradles the two simple qualities pins were utilized which is very usefull and useful for us. So as we get that the task of MOSFET is completely constrained by these pins in an underated path and in simple way which is enabled the heap to be put on the battery progressively. There are a shared belief was utilized to acquire the battery readings. There are some calculation ventures through we absolutely comprehend the entire procedure.

III. Proposed Battery Management System

The proposed battery the executives framework is appeared in fig.2. The framework is like the change invigorating unit to control the switches. What's more, the all exchanging system associated every one of the cells in battery the board framework.

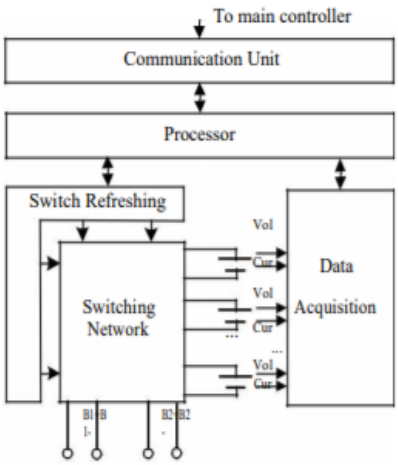

Fig.2 Block diagram of battery management system

Principle Switch Refreshing Unit:

In that the port is required to one switch. The guideline of the invigorating unit of control the switches. In that contains one transistor and one capacitor. To look after this, the switch reviving unit will charge the capacitor intermittently.

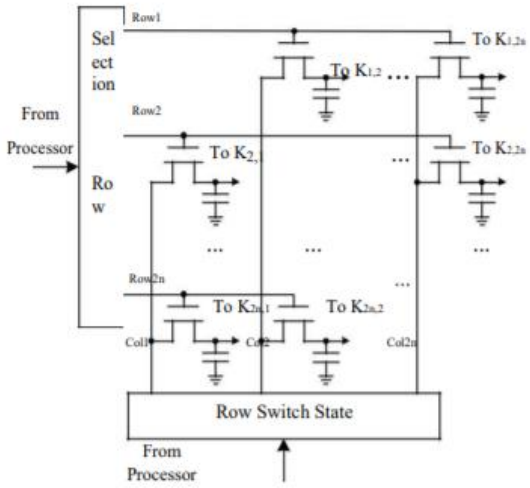

Fig.3 principle of switch refreshing unit

Calculation steps are given below:

1. Proclaiming factors
2. Proclaiming pin modes as information or yields
3. Beginning sequential screen for information procurement
4. Set entryway stick high to put burden on battery
5. Peruse voltage of battery
6. Change voltage as for cushion
7. Figure current as for R
8. Whole present and counter for each perusing.
9. Print out qualities to sequential screen for information procurement
10. Rehash stage 1-10 until voltage is less.
11. STOP

SO now Here we talk about the Source code where is source code is generate.

Source code:

```
float voltage = 1.2345;
float n_voltage = 1.2345;
float counter = 0.0000;
float current_sum = 0.0000;
float current = 0.0000;
int complete = 0;
int duration = 0;
int gate_pin = 2;
int v_read = A1;
int v_pot = A0;
int r_pot = A2;
float v_buffer = 0.0000;
voltage float r_buffer = 0.0000;
float threshold = 1.5000;
pinMode(13,OUTPUT);
pinMode(v_read,INPUT);
pinMode(v_pot,INPUT);
pinMode(r_pot,INPUT);
digitalWrite(gate_pin,LOW);
Serial.begin(7200);
while(complete == 0) digitalWrite(gate_pin,HIGH);
voltage=((5.0000*analogRead(v_read))/874.0000);
v_buffer = (analogRead(v_pot)-512)*0.0010;
r_buffer = (analogRead(r_pot)-512)*0.0010 ;
Serial.print("voltage:"); Serial.println(voltage);
Serial.print("rel. current");
```

```
Serial.println(current);
Serial.print("avg. current");
 Serial.println(current_sum/counter);
Serial.print("v buffer:");
Serial.println(v_buffer);
Serial.print("r buffer:");
Serial.println(r_buffer);
Serial.println("");
delay(500); } delay(500);
n_voltage=((4.0000*analogRead(A1))/874.0000);
digitalWrite(gate_pin,LOW);
Serial.println("Complete..... Results");
Serial.print("Ending Voltage:");
Serial.println(voltage);
Serial.print("Real Voltage (load removed):");
Serial.println(n_voltage);
Serial.print("Data Points:");
Serial.println(counter);
Serial.print("Average Current:");
Serial.println(current_sum/counter);
Serial.print("Duration(s):");
Serial.println(duration);
Serial.print("AH Rating:");
Serial.println((current_sum/counter)*(duration/3600 ));
Serial.println("");
delay(1000000); }
```

So here there lots of coding source which comes under the lots of things and variation and having different current And voltage and their lots of things like float counter, int duration, int gate, int read , int pot.

In that there are lots of another variations of coding which is except from voltage and current and its like float v buffer , float r_ buffer , float threshold, there are lots of pin mode coding as in the form of read and pot and it always in the inputs.

SO now digital write having a set which is used in the gate closed and from the beginner the serial begin is having which is used in the start serial moniter.

Then it comes in the void loop in that whole the things come in the closed or in the loop way. Then for the complete the process it will put double equal to zero.

Then it will comes again the digital write which comes under gate pin low which having output of getting closed. The voltage rating is 5.000/1024.0000.

Then as we know that there are two type of buffer v and r which they both are used to do the read analog and which is having fine tune V and R.

Then the normal currents is used to calculates the currents and current sum is help the average current.

Counters is used for the current voltage. For the serial print input voltage and command print to monitor.

Then from the serial print it will used in the voltage , rel current , current sum /counter, average current and in serial print the buffer is also there like v, r ,r .

So for using arduino we will use that all codings without this it will impossible without that the process is not done even in single steps. For battery management the arduino process is very good to do.

IV. RESULTS

SO the general objective is to record or store the normal release current and it requires investment to get the full charge to cutoff voltage decided and the esteem will be 1.3. interestingly, a voltage accounts and a present computations was made in each half second . the arduino have a scale in which begins the point from zero to one thousand twenty four and it computes the incentive on dependent on extent from it beginning condition 2.6V for the simple peruses. The potentiometer is set between the leading

body of 2.6V of arduino and as we now the range between zero to 874 for the simple read . at that point for buffering the obstruction contrasted with changing the current was done becoz of disproper opposition esteem and it would be given a blunder an incentive amid the entire test. It gives the opposite relationship utilizing OHMS law. As I said about past time that it requires the less investment that is hour and half. The voltage and the cradles is alter like clockwork to affirms precise readings and counts. The entire outcome is appeared as diagram. The entire test information has more than the 11,000 DATA and roughfly it will be 10,000 information focuses . the model is additionally appeared in the beneath things. As we probably am aware the whole sequential screen was placed in a CSV with the goal that it will most likely utilized in matlab whithout this its difficult to do.

```
voltage:3.58
rel. current1.32
avg. current1.38
v buffer:-0.11
r buffer:0.08

.............
.............
.............

Complete....... Results
Ending Voltage:2.50
Real Voltage (load removed):2.80
Data Points:10912.00
Average Current:1.30
Duration(s):5665
AH Rating:1.30
```

This was an average printout for the serial monitor for the test.

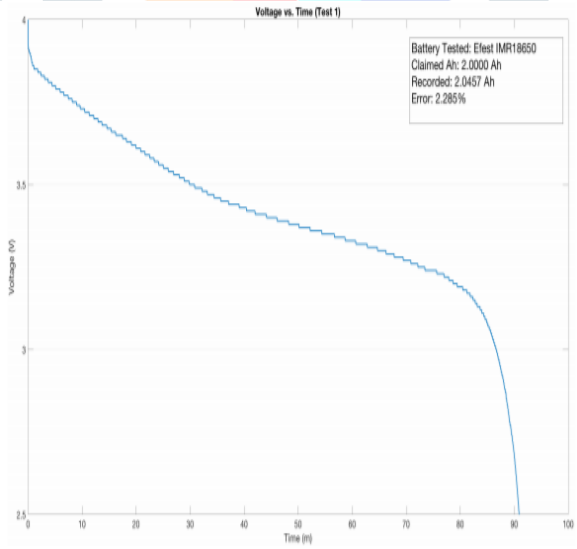

Fig.4 The battery tested claimed 2Ah recorded by arduino was 1.025 Ah with 4.1% error

From the below there is release bend for a lithium based battery. In that chart there is a state of step drop off and its close to the end that is the reason the battery are so down to earth in loads of use. There are wide range voltage where the voltage is having atleast above 3V which is viewed as very and very usefull in this.As we discover blunders in this because of numerous different reasons yet commonly some is adequate. Most of mistake might be appeared inside the battery interior substance responses. Also its conceivable condition that The battery isn't charged appropriately or even the heap the was expelled to fastly. To improve the test outcome the present sensor might be an interesting point to gauge the genuine and evident current sensors .

The two voltage sensor might be useful and advantageous for us to quantify the voltage drop. So at last more associations is to be made to the voltage drop over the resistors.

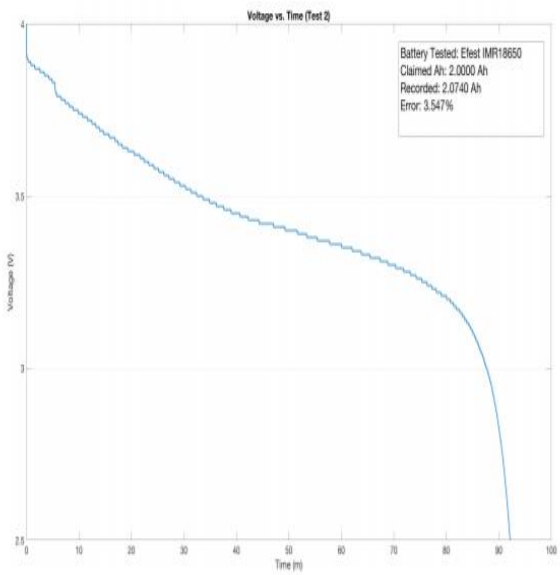

Fig.5 The battery tested claimed 2Ah recorded by Arduino was 1.064Ah with 1.9% error.

V. CONCLUSION

So the battery the executives framework gave precise readings to not exactly the five percent blunder. Much of the time the potentiometer may be have improve the test outcomes. The blunders is produce because of inappropriate readings so thusly it influence the current . what's more of inappropriate planning the arduino could have an impact In that however not major to the whole test. There is conceivable things in which inside reinforcement of the battery is perfect . there are numerous conceivable occasions is exists which is need to improve and perfect . here which we can include more sensors through that we get effectively a voltage In each appropriate way. It increment exactness yet it put effect the code altogether. This thing Is utilized in primarily in modern application. Having this procedure in turn around could clients when the battery is practically full and battery banks ought to be convert to releasing for application.

VI. REFERENCES

[1] Cao and A. Emadi "Batteries need electronics", IEEE Ind. Electron. Mag., vol. 5, no. 1, pp.27 -35 2011 Vazquez, S.; Lukic, S.; Galvan, E.; Franquelo, L.G.; Carrasco, J.M.; Leon, J.I. "Recent advances on Energy Storage Systems", IECON 2011 - 37th Annual Conference on IEEE Industrial Electronics Society, pp. 4636 – 4640.

[2] Shibata , S. Taniguchi , and etc, "Management of serially-connected battery system using multiple switches", Proc. IEEE Int. Conf. Power Electron. Drive Syst., vol. 2, pp.508 -511 2001.

[3] U. Jeong and H. V. Venkatasetty, “Recent advances in lithium-ion and lithium-polymer batteries,” in Proc. 17th Annu. Battery Conf. Appl. Adv., 2002, pp. 173–178. Y. U. Jeong and H. V. Venkatasetty, “Recent advances in lithium-ion and lithium-polymer batteries,” in Proc. 17th Annu. Battery Conf. Appl. Adv., 2002, pp. 173–178.

[4] Coastes and C. Fox, “Multiple advanced battery systems for electric vehicles”, BCAA 1994 – 9 th Annual Battery Conference on Applications and Advances.

[5] J. Lee, K. Rajashekara, and A. Emadi, “Power electronics and motor drives in electric, hybrid electric, and plug-in hybrid electric vehicles,” IEEE Trans. Ind. Electron., vol. 55, no. 6, pp. 2237–2245, Jun. 2008.

[6] Alvarez, S.V.Garcia, C. F. Ramis, "Developing an active balancing model and its Battery Management System platform for lithium ion batteries," Symposium on Industrial Electronics (ISIE), pp.1-5, 2013.

[7] M. Ceylan and A. Balikci, "Design and implementation of an electronic constant current DC load for battery discharge and power supply test systems," 2014 16th International Power Electronics and Motion Control Conference and Exposition, Antalya, 2014, pp. 924-927.

[8] B. Kumar, N. Khare and P. K. Chaturvedi, "Advanced battery management system using MATLAB/Simulink," 2015 IEEE International Telecommunications Energy Conference (INTELEC), Osaka, 2015, pp. 1-6.

[9] Manenti , A. Abba , A. Merati , S. M. Savaresi and A. Geraci "A new BMS architecture based on cell redundancy", IEEE Trans. Ind. Informat., vol. 58, no. 9, pp.4314 -4322 2011.