Design and Implementation of Wireless Communication Scheme for Smart Grid

Mayuri Sahu
Research Scholar
Department of Electrical Engineering,
Shri G. S. Institute of Technology and Science, Indore, Madhya Pradesh, India

Abstract: In modern world every field is adopting intelligent control although the service provider for energy is still using the conventional methods. The proposed system will improve conventional method to make a smart grid system. Smart grid can vanish the role of retailer in between supplier and consumer. Consumer can be benefitted by installing rooftop solar panel. They can send surplus solar power to grid which will help other consumers to satisfy their demand and exceed the welfare function. An observation of real time data of power production of solar panel by stable communication link is done. A time series and causal method are chosen for forecasting the next hour of power production by rooftop solar panel.

***IndexTerms* - Smart grid, time series model, causal method, power deficit, Rooftop solar panel, welfare function.**

I. INTRODUCTION

Smart grid is an evolved grid system that manages electricity demand in a sustainable, reliable, and economic manner which is built on advanced infrastructure. It uses digital communication technologies to detect and react for local changes in usage. It consists of control, automation, emerging technologies and equipment working together, but these technologies work with the electrical grid to respond for demand quickly in digital form. In this new era of reliability everything requires power supply as an input because demand is being increasing day by day and customers are having high expectation regarding quality [1].

Various strategies have been proposed for smart grid management [2]-[4], as it requires a complex two-way communication infrastructure and computing technologies. But there is no solution to ensure a reliable flow towards consumption devices catering for a variable demand.

The previous power management solutions simply react to the fluctuation of the power produced but proposed system collects data of produced power and send that data to cloud. Distribution System Operator (DSO) receives that data and analyse the generated power and the load demand. DSO will than take decision to meet the load demand so that the power interruption can be avoided. The main aims of the proposed system are:

i) Transmitting real time data from solar panel and loads for further fast computation, ii) Determination of suitable energy dispatch to meet load demand, iii) Estimation of power production in advance.

Some of the closely related work from the literature is given in this section. Demand response management [5] as it has been explored to motivate customers to share their normal consumption patterns in response to electricity price variations in real time. A demand response model [6] for real time is an optimized model that adjusts the hourly load level of given consumer to hourly electricity prices. This demand response management requires each user's demand pattern to be fed into controller for further computation and communication of user's demand to supplier [7].

Control of power system is increasingly becoming difficult. An automatic control strategy based on wireless or wire links can improve stability issues [8]. The real time secure communication is possible for micro-grids control [9].

Cloud computing resources are used to make fast distributed computation. A predictive technique with neural network [10] can be used in smart grid encompassing a photovoltaic park to predict both energy production and consumption. Many techniques are being used to forecast values using wavelet transform and ARIMA (Autoregressive Integrated Moving Average) models [11]. The AR part of ARIMA indicates that the evolving variables of interest are regressed on its own lagged values. The MA part indicates the regression error is actually a linear combination of error terms occurred at various times in the past. The I part indicates the data values which have been replaced with difference between their values and the previous values.

The paper is compiled in following manner. The next section discusses the related research of existing approaches. Section III introduces the contribution of the proposed work. Section IV shows the design of prototype developed. Section V describes the forecasting algorithm for power production and analysis of data for energy flow. Section VI shows the case study and Section VII reports the result and analysis. The last section draws conclusion and future work.

II. CONTRIBUTION OF PROPOSED WORK

The proposed work is based on establishment of communication link between distribution system operator (DSO), distributed generator (DGs) and loads. It helps in establishment of time ahead load demand and generation pattern of the distribution feeder.

DSO will keep the track of DG generation data and load data. The methodology of the proposed system may be elaborated as the data of DGs is given to Arduino UNO through voltage and current sensors. These sensors are connected to Arduino UNO via its analog pins. After getting the data Arduino UNO send this data to cloud using ESP8266 Wi-Fi module. After this, DSOs will collect data and analyse the parameters to make decision.

In this paper, Arduino UNO is used as it consists of 6 analog pins which sense the analog data. Here, converting the analog world to digital is a key Arduino function. The Arduino Uno ADC is of 10-bit resolution (so the integer values from (0-(2^10) 1023)). This means that it will map input voltages between 0 and 5 volts with integer values between 0 and 1023. So, for every (5/1024= 4.9mV) per unit. For sending data to cloud WiFi module ESP 8266 is used.

Connection of Arduino UNO with ESP8266

Arduino UNO	**ESP8266**
RX	RX
TX	TX
GND	GND
3.3V	V cc
3.3V	CH-PD
GND/or nothing	RST

Open serial monitor and select "Both NL and CR" and baud rate to 9600.

Sending AT commands to test the proper connection between Arduino UNO and ESP8266. For connecting ESP8266 to internet hotspot following AT commands [12] are used.

a) AT+CWLAP -To list access points

b) AT+CWJAP - To join access point

c) AT+CWJAP= "SSID", "Password" -To join to particular access point

d) AT+CWMODE? - To get WiFi modes

e) AT+CWMODE=3-To get both STA and AP

f) After configuration of Arduino UNO and ESP8266 the RX and TX pins of ESP8266 gets interchanged and connected to TX and RX pins of Arduino UNO respectively. To send data to Thingspeak channel after adding the API KEY which is required to get data of particular proposed work.

For sensing power, voltage and current sensor are made using LM358 Op-Amp. For voltage sensor two resistors are used as voltage divider. The power specifications of solar panel which is used are as follows:

Typical Peak Power
(P_{max}) = 40W
Max. Peak Power Current
(I_{mp}) = 2.34A
Max. Power Voltage
(V_{mp}) = 17.1V
Open Circuit Voltage
(V_{oc})= 21.0V
Short Circuit Current
(I_{sc})= 2.62A

The above power specification is of single panel but in this paper two panels in parallel are used. And the voltage and current source are built in such a manner to be at safer limit even if voltage and current rises to its maximum limit because the maximum voltage which can be applied to ADC channel of Arduino UNO is 3.3V so the value of resistor are 12kΩ and 2kΩ and the voltage is taken across 2kΩ resistor which implies that at maximum voltage of solar panel i.e. 21V the ADC channel can be capable to withstand easily because the voltage will reduced to 3V which is smaller than 3.3V and further it can be programmed to give actual value of 21V. Fig.1 shows voltage and current sensor. The sensed voltage is given at pin A1 Arduino UNO.

$$V_{out} = \frac{21 * 2}{14} = 3V$$

3V is given as output from ADC channel but for Arduino this value will be in digital form. Scaling is done to get actual value from ADC channel as it will take 0V as 0 and 5V as 1023 in digital form.

For sensing current LM358 Op-Amp is used. The circuit of current sensor is built with a Gain of 5.5, for this system the required gain should be either 6.29 or less than this value to be on safer side, as ADC channel will be able to withstand at 3.3V and the maximum power current the solar panel can give is 5.24A which when passes through resistor of 0.1Ω, so that power loss will be less, it will give a voltage of 0.524V. Pin A2 of Arduino UNO is used for sensing current.

Here, non-inverting operational amplifier is used with gain given as:

$$\text{Gain} = \frac{V_{out}}{V_{in}} = A_v = 1 + \frac{54K\Omega}{12K\Omega} = 5.5$$

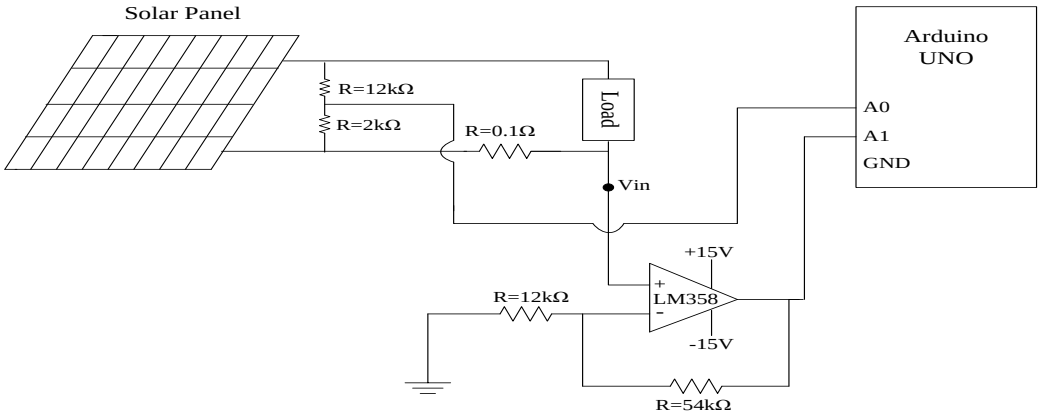

Fig. 1 Shows Circuit Diagram of Voltage and Current sensor

Scaling for current is done for 0.524V as an input to current sensor from solar panel Arduino UNO which will be in digital form. Fig.2 illustrates the power supply for current sensor to isolate this circuit from the system.

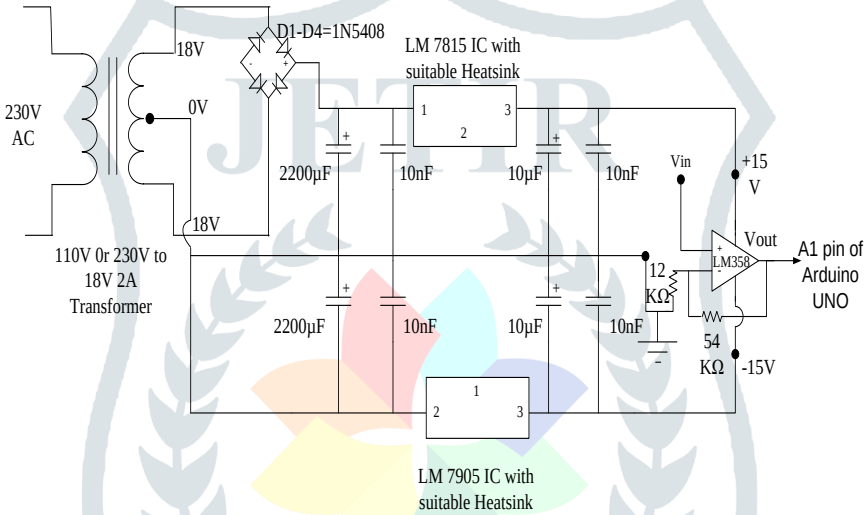

Fig. 2 Shows Circuit of Power Supply for Current Sensor

III. DESIGN OF PROTOTYPE DEVELOPED

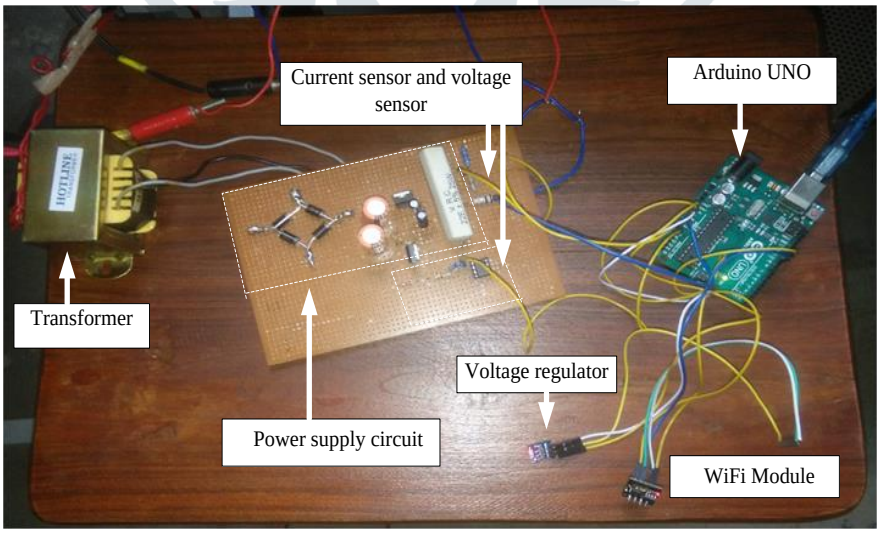

Fig. 3 Photograph of Power Supply, Current Sensor, Voltage Sensor, Arduino UNO and WiFi

Fig.3 shows the image of hardware used in the proposed work having power supply, current and voltage sensor. Arduino UNO and ESP8266 WiFi Module are connected with jumper wires.

Fig.4 shows the final prototype of the proposed work where the system is collecting the data of voltage and current of solar panel and storing the data in Thingspeak channel with the help of Arduino UNO and WiFi Module.

Fig. 4 Prototype of Proposed Work

IV. FORECASTING ALGORITHM

There are three types of forecasting techniques [13]: Qualitative methods, Time series methods, Causal method. In this paper, for making predictions causal method is used i.e. regression analysis respectively. In this technique the data relate to the past periodic values of generation. Time series refers to the past recorded values of the variables under considerations. These values are measured at specified intervals of time. These intervals may be minutes, hours, days, weeks, months etc.

Considering, the planning horizon of 12 hours shown below in Fig.3 Role of time index t and h illustrating daily 12 hours horizon spans the t-1 hour prior to the current one, the current hour t, and the 12-t hours following the current one.

Note:

i) Generation for t-1 hour is known.

ii) Generation for t hour is unknown, which needs to be communicated to the DSOs. (E.g. 10 minutes prior to current hour).

iii) The generation for following 12-t hour is unknown data whose uncertainty needs to be modeled.

iv) The spanning hour is from 6 am to 6 pm.

v) For 6 am at next day, past values can be taken as reference i.e. one day before present day for 3 hours from 6 am to 9am after this the present-day values will be used for predictions.

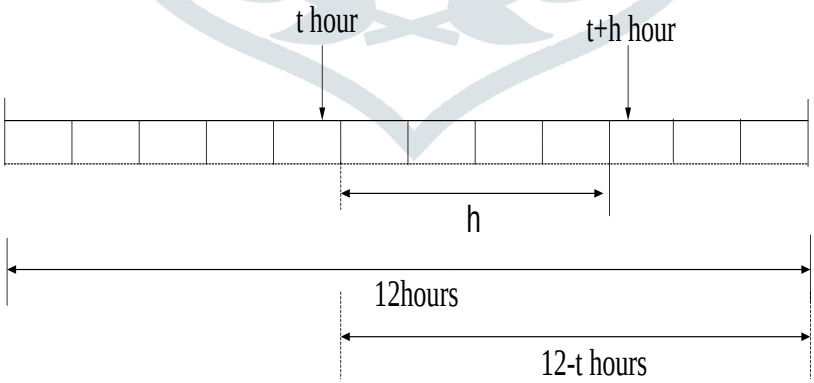

Fig.5 Role of Time Index t and h

First method used here is linear regression analysis which is a causal method.
Fig.5 shows causal method.

$$y = a_0 + a_1 * x \qquad (1)$$

$$a_0 = \frac{\sum y \sum x^2 - \sum x \sum xy}{n \sum x^2 - (\sum x)^2} \qquad (2)$$

$$a_1 = \frac{n\sum xy - \sum x \sum y}{n\sum x^2 - (\sum x)^2} \quad (3)$$

Above equation is used for regression analysis, where *y* is dependent variable, *a* is *y* intercept, *b* is slope and *x* is the independent variable. Here, y is taken as power and x is taken as time. n is number of past data collected. For any time t, the values can be calculated by putting the values of past data to the Eq. (1).

Fig.6 shows flow chart of forecast value and data analytics. It shows that data of generated power from all the solar panel (SPP) gets collected on the cloud and can be seen by DSOs, now if the demand (LD) is greater than SPP then deficit power can be taken from grid but if LD is less than SPP it means solar panel is able to fulfill the demand and surplus power from panel can be given to grid. This decision can be made by DSOs only in one condition, for making smooth operation at the time of power deficit, if DSOs are having predetermined value for next hour. This can be done by forecasting techniques. DSOs will know the nature of future events to accordingly take action or plan action when sufficient time is in their hands to implement plan. The generation of solar panel uncertainty is modeled using a forecast value.

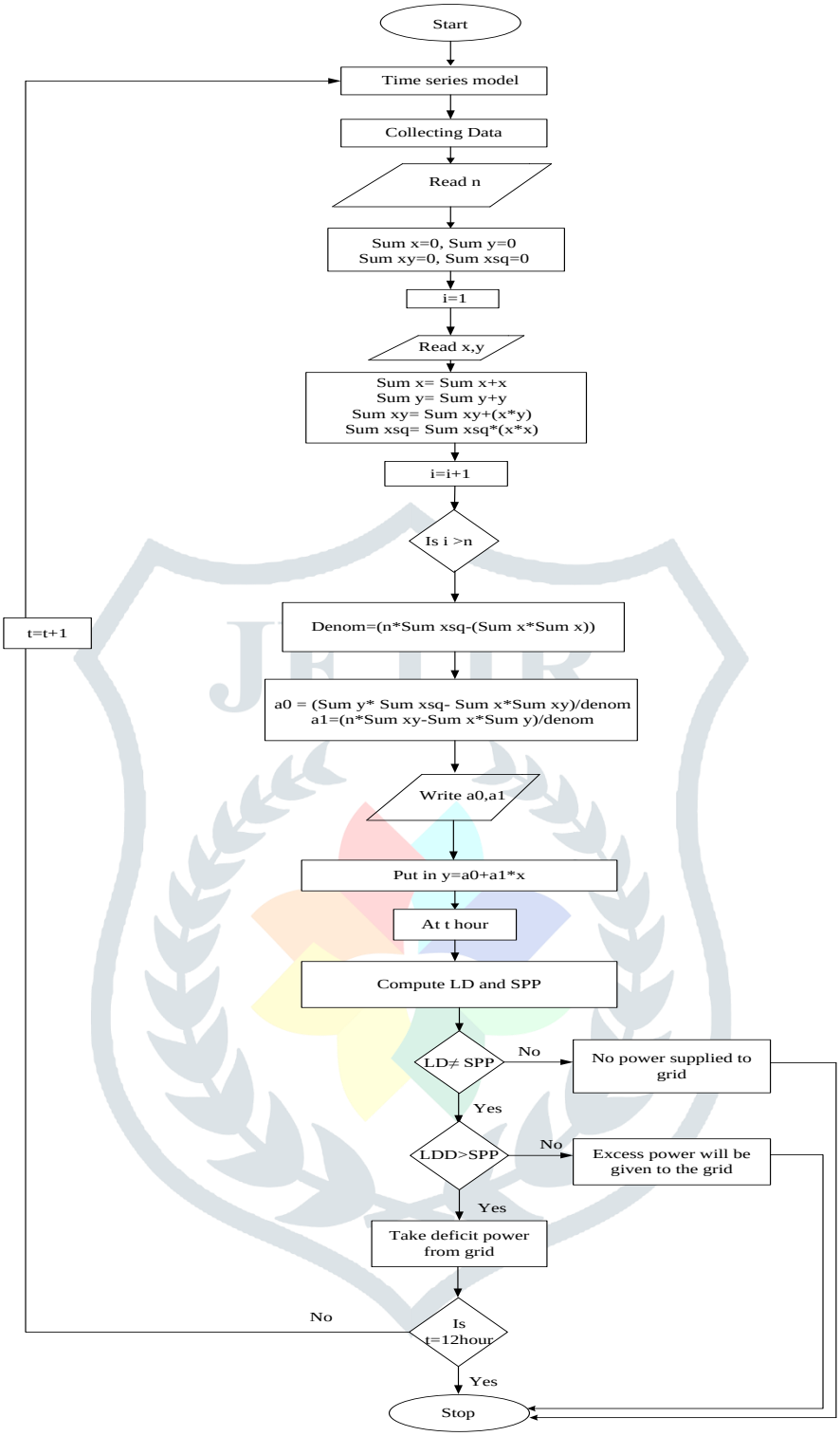

Fig. 6 Flowchart of Forecast Value and Data Analytics

V. CASE STUDY

In this paper, a Radial distribution system is chosen. It has one power source for group of customers which makes it inconvenient to use due to power failure, short circuit or downed power line. Entire system need to suffer due to this problem as it will interrupt the power and the consumer will not get any power supply for not having alternate path. Now to overcome this problem if customer installs the rooftop solar panel then it will work as an alternate source. In India, Government provides subsidy and scheme for installing rooftop solar panel [14].

Fig.7 shows block diagram of proposed work. In the block diagram the power generated from the solar panel is measured with the help of Arduino UNO and this data is transferred to the cloud or the local server. The DSOs will be continuously observing real time data from local server to fulfill the required local load demand and from this observation the power required from the grid comes in picture and this data is given to the TSOs (Transmission System Operators) and TSOs will allow the grid to send the required power so that the load demand can be fulfilled.

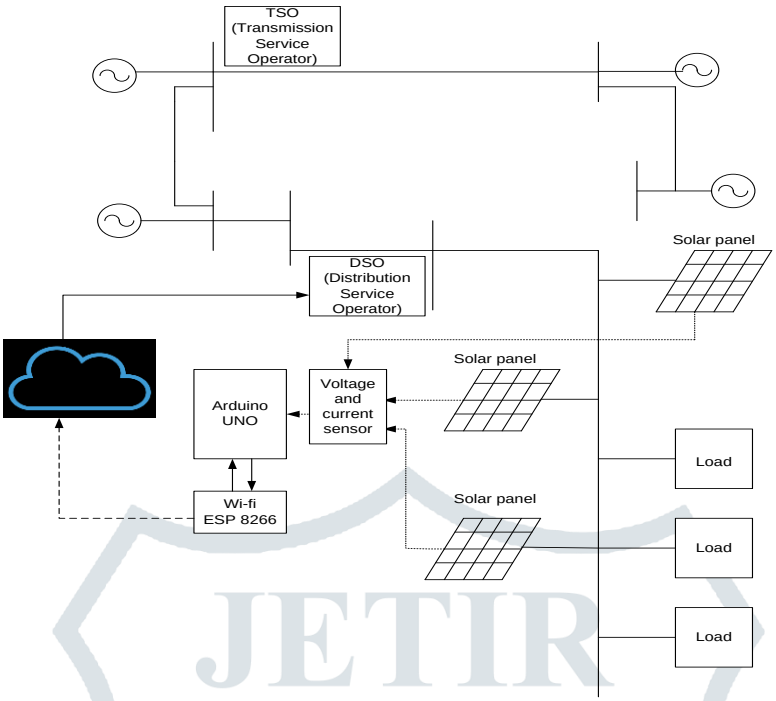

Fig. 7 Block Diagram of Proposed System

VI. Result and Analysis

Following are the results to show forecast month wise value of Load Generation Balance Report 2016-2017 for month wise power supply position of India in 2015-2016.

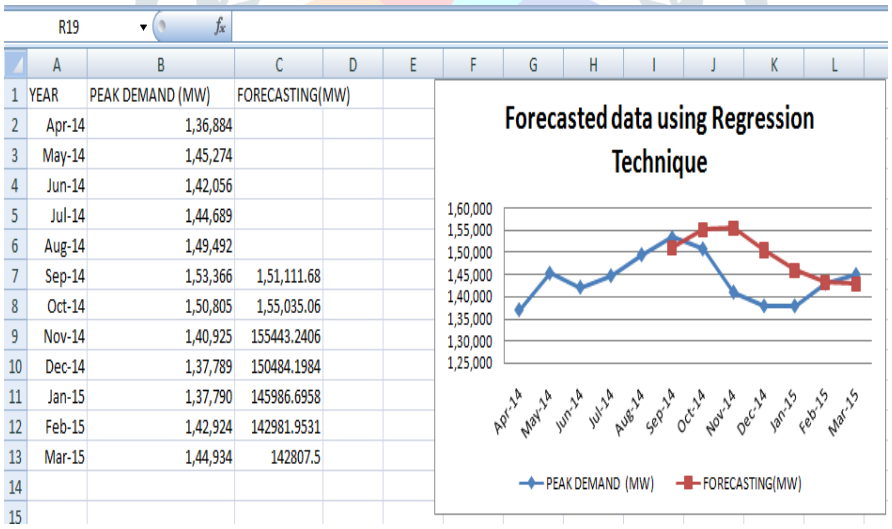

YEAR	PEAK DEMAND (MW)	FORECASTING(MW)
Apr-14	1,36,884	
May-14	1,45,274	
Jun-14	1,42,056	
Jul-14	1,44,689	
Aug-14	1,49,492	
Sep-14	1,53,366	1,51,111.68
Oct-14	1,50,805	1,55,035.06
Nov-14	1,40,925	155443.2406
Dec-14	1,37,789	150484.1984
Jan-15	1,37,790	145986.6958
Feb-15	1,42,924	142981.9531
Mar-15	1,44,934	142807.5

Fig. 8 Shows Regression Method

Fig.8 shows the forecast data of load generation balance report of India 2015-2016 using causal method.

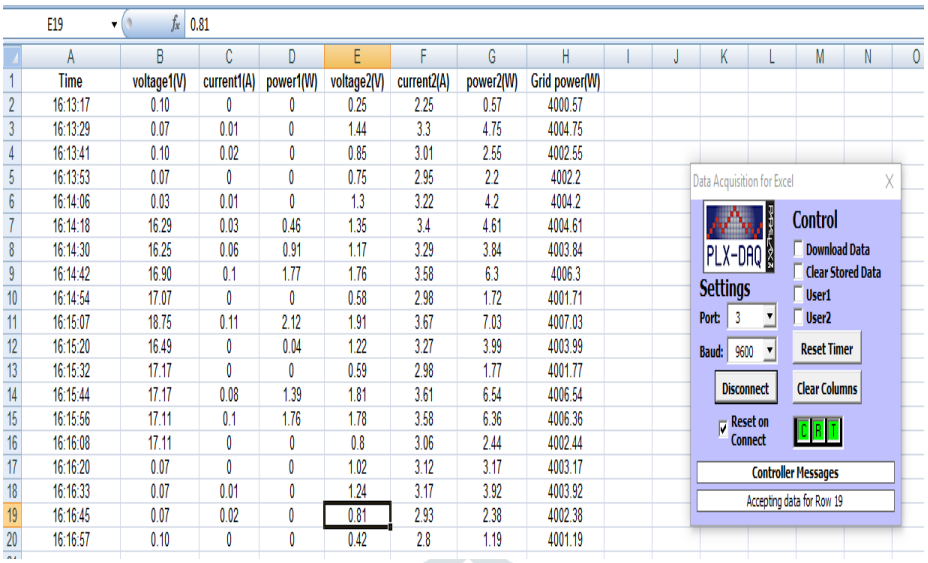

Time	voltage1(V)	current1(A)	power1(W)	voltage2(V)	current2(A)	power2(W)	Grid power(W)
16:13:17	0.10	0	0	0.25	2.25	0.57	4000.57
16:13:29	0.07	0.01	0	1.44	3.3	4.75	4004.75
16:13:41	0.10	0.02	0	0.85	3.01	2.55	4002.55
16:13:53	0.07	0	0	0.75	2.95	2.2	4002.2
16:14:06	0.03	0.01	0	1.3	3.22	4.2	4004.2
16:14:18	16.29	0.03	0.46	1.35	3.4	4.61	4004.61
16:14:30	16.25	0.06	0.91	1.17	3.29	3.84	4003.84
16:14:42	16.90	0.1	1.77	1.76	3.58	6.3	4006.3
16:14:54	17.07	0	0	0.58	2.98	1.72	4001.71
16:15:07	18.75	0.11	2.12	1.91	3.67	7.03	4007.03
16:15:20	16.49	0	0.04	1.22	3.27	3.99	4003.99
16:15:32	17.17	0	0	0.59	2.98	1.77	4001.77
16:15:44	17.17	0.08	1.39	1.81	3.61	6.54	4006.54
16:15:56	17.11	0.1	1.76	1.78	3.58	6.36	4006.36
16:16:08	17.11	0	0	0.8	3.06	2.44	4002.44
16:16:20	0.07	0	0	1.02	3.12	3.17	4003.17
16:16:33	0.07	0.01	0	1.24	3.17	3.92	4003.92
16:16:45	0.07	0.02	0	0.81	2.93	2.38	4002.38
16:16:57	0.10	0	0	0.42	2.8	1.19	4001.19

Fig. 9 Shows Data Collected on Excel-Sheet by PLX-DAQ

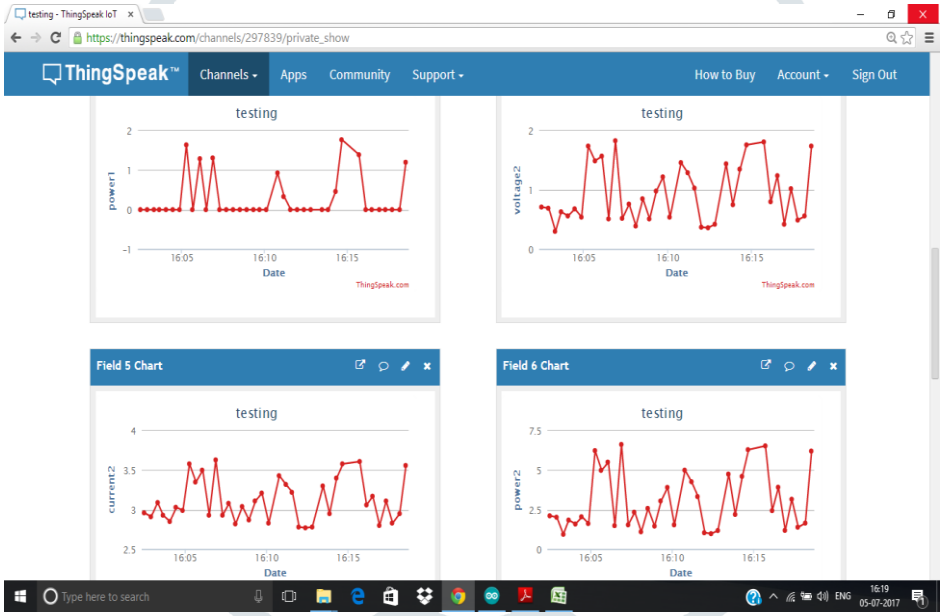

Fig. 10 Shows the Data on Thingspeak Channel

Fig.9 shows the value solar panels and grid gets collected on excel sheet for applying forecasting techniques using PLX-DAQ and Fig.10 shows sending it to cloud using Thingspeak channel.

VII. Conclusion

The proposed method is a small scale illustration of smart grid system which collects real time data of power generation of solar panel so that the power deficiency can be reduced and smooth operation can be made without load shedding problem by forecasting the value of generation of solar panel several minutes prior to the corresponding hour.

This can be used for large scale by using sensors on both renewable energy source and on load side to collect data for knowing the generation and load pattern. So that the demand and energy consumption of customer and the grid supply both can be uploaded to the cloud. DSOs will be able to make decision for supplying the power to particular load where power fulfillment is necessary.

References

[1] IEEE Guide for Smart Grid Interoperability of Energy Technology and Information Technology Operation With the Electric Power System (eps), End-Use Applications, and Loads, IEEE Std. 2030-2011, Oct.2011, pp. 1–126.

[2] W. Shi, X. Xie, C. C. Chu, and R. Gadh, “Distributed optimal energy management in microgrids,” IEEE Transactions on Smart Grid, vol. 6, no. 3, pp. 1137–1146, 2015.

[3] F. Kennel, D. Gorges, and S. Liu, “Energy management for smart grids with electric vehicles based on hierarchical MPC,” IEEE Transactions on Industrial Informatics, vol. 9, no. 3, pp. 1528–1537, 2013.

[4] L. Jia and L. Tong, "Dynamic pricing and distributed energy management for demand response," IEEE Transactions on Smart Grid, vol. 7, no. 2, pp. 1128–1136, March 2016.
[5] N. Çiçek and H. Deliç, "Demand Response Management for Smart Grids with Wind Power," IEEE Trans. On Sustainable Energy, vol. 6, no. 2, pp. 625-632, Apr. 2015.
[6] A. J. Conejo, J. M. Morales and L. Baringo "Real time demand response model," IEEE Trans. on Smart Grid,vol. 3, no.1, pp.236-242 ,Dec. 2010.
[7] P. Samadi, H. M. Rad, R. Schober and V.W.S. Wong, "Advanced demand side management for the future smart grid using mechanism design," IEEE Trans. on Smart Grid, vol.3, no.3, pp.1170-1180, Sep. 2012.
[8] M. Pavlovski, A. Gajduk, M. Todorovski and L. Kocarev , "Improving power grid stability with communication infrastructure," Accepted for publication in IEEE Journal on Emerging and selected topics in Circuits and System.
[9] V. Kounev, D. Tipper, A.A. Yavuz, B.M. Grainger,and G.F. Reed, "A secure communication architecture for distributed microgrid control," IEEE Trans. on Smart Grid, vol.6, no. 5, pp. 2484-2492.
[10] G. Capizzi, G.L. Sciuto, C. Napoli and E. Tramontana, "Advanced and adaptive Dispatch for smart grids by mean of predictive models", Accepted for publication in IEEE Trans. on Smart Grid, 2017.
[11] A. J. Conejo, M. A. Plazas, R. Espinola and A. B. Monila, "Day ahead electricity price forecasting using the Wavelet transform and ARIMA Model," IEEE Trans. on Power Syst., vol.20, no.2, pp.1035-1042, May 2005.
[12] AT Commands reference guide [online]
Available: https://www.sparkfun.com/datasheets/Cellular%20Modules/AT_Commands_Reference_Guide_r0.pdf
[13] R. M. Gor, Industrial Statistics and operational management, National Science Digital Library, 25 Mar 2009, ch. 6, sec. 6.3, pp.142-172
[14] No.30/16/2014-2015-NSM, Ministry of New & Renewable Energy, Government of India [online].
Available: http://mnre.gov.in/schemes/decentralized-systems/solar-rooftop-grid-connected/