Remote Power Transmission Utilizing Class DE Power Amplifying Device

[1]Jeffin James, [2]Dhinesh.R,
[1,2] B.Tech. Student, Department of Electrical and Electronics Engineering
SRM Institute of Science and Technology, Chennai, India

Abstract: Remote power frameworks are getting prominent with the improvement in the tech not on the grounds that it is an extravagant and cool origination yet in addition since it is progressively advantageous and more secure in certain applications. For instance, this venture expects to help high power server farm configuration to be changed to remotely fueled focus to give a safe and hands-on workplace even under various burden conditions. Thinking about the essential origination of attractive enlistment hypothesis, electric power extending from microwatts to thousand watts can be remotely exchanged starting with one loop then onto the next without having a center material. The motivation behind this venture is to apply high productivity class-DE converter approach to get substituting current so this rotating current is transmitted from essential loop to optional while being ventured up as required inside the task determinations. At the load side is a full scaffold diode rectifier that is changing over the caught substituting current back to coordinate current. In the extent of this undertaking, numerical estimations for the circuit components' qualities under the class-de control amplifier topology, reproduction results, and input control strategy will be examined.

I. Introduction

A wireless power system is a system that is capable of transferring electrical power from a power source to an electrical load without having any electrical connections. This system may transfer electrical power ranging from microwatts to megawatts with sufficient circuit components and design. In a basic wireless power system there can be three main bodies: DC AC converter, Transmitter and Receiver Coils, AC-DC Converter. Besides these, there are different control systems and switching methods. In addition to its power range, a wireless power system may be divided into three for its ability to transfer power to varying distances: Short Distance, Medium Distance, and Long Distance. Distance range has a magnificent amount of effect on efficiency of the overall system as the transferred electrical power degrades with the distance. In other way, the distance will assign the coupling factor between two coils, as it is equal to 1 for an ideal transformer. As Maxwell has proved, the magnetic induction theory allows the receiver coil to capture the magnetic fields and induce current on it. However, the important part here is to capture as many as magnetic field lines to keep the efficiency at highest point. Because of this reason, having two inductively coupled planar coils with enough surface area is one of the most efficient designs for the wireless power systems. In this project, we have two parallel planar coils with different numbers of turns. Aim is to capture most of the magnetic waves that are produced by the primary coil and circulating in the air freely. The design of the planar coils is beyond the scope of this project.

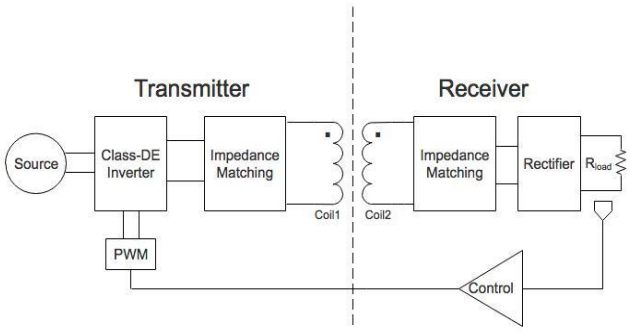

Fig.1 Proposed model

II. Architecture and Design

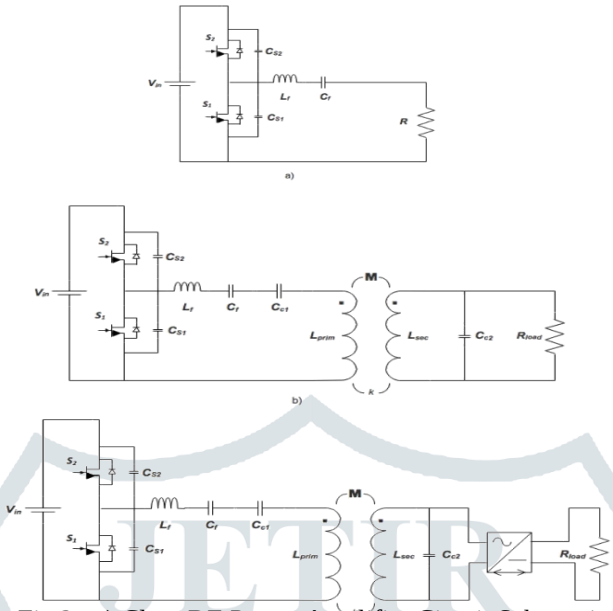

Fig.2 : a) Class-DE Power Amplifier Circuit Schematics
b) Class-DE Power Amplifier with Inductive Coils and Load
c) Class-DE Power Amplifier with Inductive Coils, Rectifier, and Load

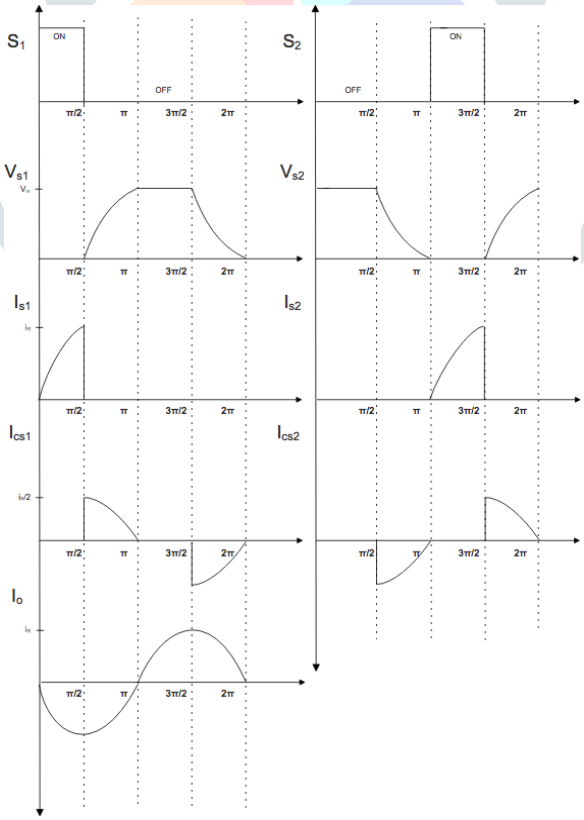

Fig. 3

Class-DE power amplifiers are not recently explored; however, their usage became more common in power electronics with the increasing interest in wireless systems. A class-DE power amplifier can be modeled by two series transistors in parallel with a dc voltage source, two shunt capacitors across the each of these transistors, a series inductor-capacitor pair that is connected from the mid-point of the two transistors, and in series to that a load is connected as shown in figure 2.a.We can simply say that class-DE topology is brought together by picking the advantages of both class-D and class-E amplifiers leaving out their lacks or disadvantages. As in class-D,class-DE has 2 transistors with less stress across them, as well as higher power pushing capability as in class-E. Eventually, after a careful design, the expected waveforms should occur as displayed in figure 3 .

III. Simulation Results and Discussions

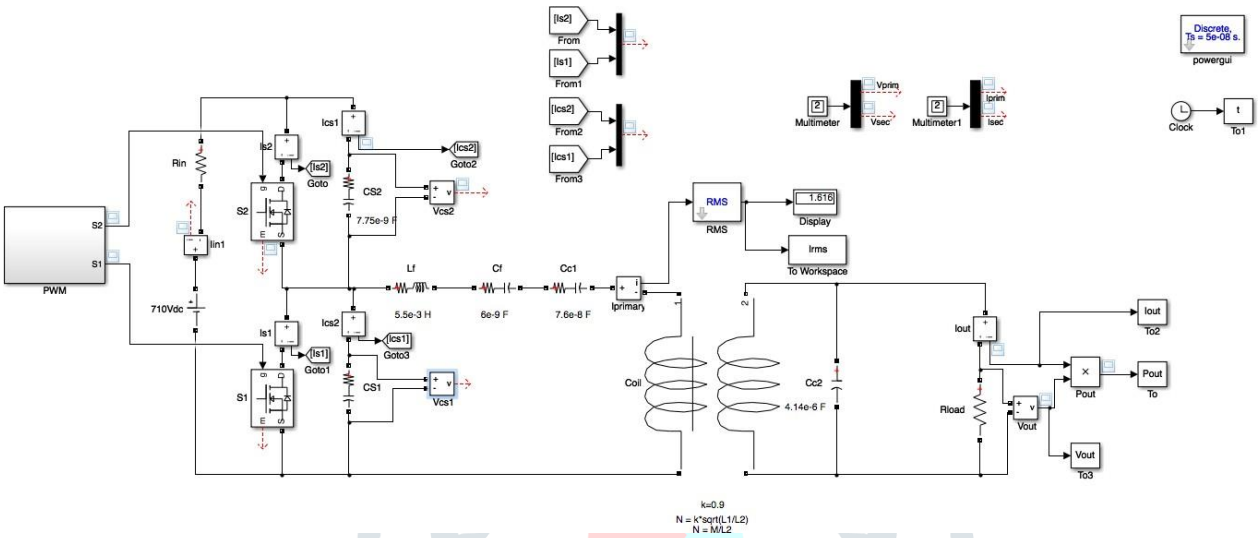

Figure 4

The Matlab Simulink file is gathered together as in shown in figure 4. The component values of the $710Vac$ to $10Vac$ converter circuit that operates under constant and full load ($500W$) condition, in which the coil's non-physical step down turns ratio is 16/1 and coupling factor k to be 0.9, can be found in table .The Powergui block in Simulink file is set to discrete analysis and the $Ts = 5e-8\ s$. Here, to have an accurate system, it is important to have a sample time less than the switching frequency that is $1\ 30e3/ = 3.33e-5s$. PWM signal block is created using a triangle block, two constant blocks to set the threshold levels, and two comparators. By adjusting the top and bottom constant blocks' values to +0.5 and -0.5 respectively, and having a triangle wave between ±1, we obtain two separate switch control waveforms with 25% ON and 75% OFF duty cycle. The Simulink schematic and the waveforms can be seen as in figure 4 and figure 5.

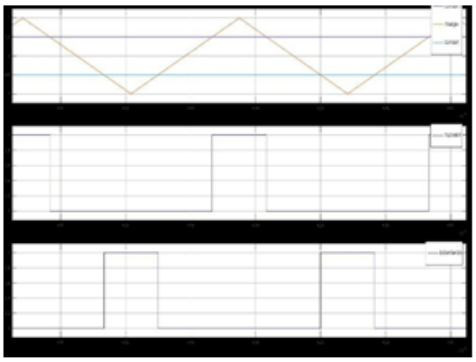

Figure 5: Two Transistor Driving PWM-Block Outputs Created Using Two Constant and a Triangle Wave

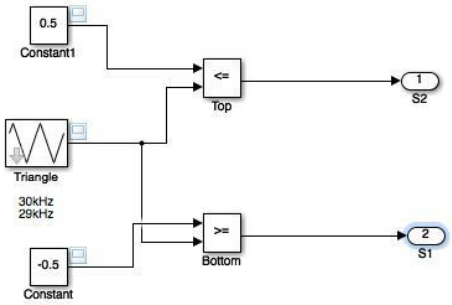

Figure 6: Inside PWM Block

	Value	Series Resistance	Ron	Rdiode
Vin	710Vdc	NA	NA	NA
S1 & S2	NA	NA	0.12 ohms	0.01ohms
Cs1 & Cs2	15e-9 F	NA	NA	NA
Lf	2.88e-3 H	1.2 Ω	NA	NA
Cf	11.3e-9 F	1e-4 Ω	NA	NA
Cc1	7.6e-8 F	1e-3 Ω	NA	NA
Lcoil Prim	2.1e-3 H	1.4 Ω	NA	NA
Lcoil Sec	6.8e-6 H	6.9e-3 Ω	NA	NA
Rload	0.2 Ω	NA	NA	NA

Table 1. Parameters of the Simulation Circuit

IV. Conclusions

In the scope of this project we have covered a new highly efficient design of class-DE type power amplifier. This topology has been studied recently with the improvements in the wireless power systems. Two circuits were designed and tested under different load conditions to find out the practicality of them. Our sole purpose was to achieve higher power transfer efficiency while challenging ourselves dropping down from high voltage at the input side to low voltage at the load side, and having an adaptive system for load variations. Eventually, the circuit that was designed for half load power condition is chosen to be a better system because of its reliability under both full load power and half load power scenarios. This has proven that the worst case or the optimal case would have no negative effect on the system with appropriate control techniques and methods. In both of the cases, the efficiency was kept above 90%, which is still a higher number than project minimum requirements.

To conclude, some future work is needed to enhance the quality of this system. In this paper, we have covered the effect of frequency and duty cycle controls to observe the changes at the output and efficiency. However, we haven't actually defined any formulization or a code algorithm. This can be achieved by sensing the output voltage or current and transmitting this data to the

receiver side to control the PWM block. One of the other needed future works could be actually building a hardware system to justify the simulation results wire experimental results. In addition to all, because one of the requirements was to have a dc power at the load side, a rectifier can be added to the system as proposed in figure 1.

V. References

[1] N. O. Sokal and A. D. Sokal, "Class E-A new class of high-efficiency tuned single-ended switching power amplifiers," in IEEE Journal of Solid-State Circuits, vol. 10, no. 3, pp. 168-176, Jun 1975

[2] Michael A. de Rooij, Wireless Power Handbook - 2nd Edition

[3] H. Koizumi, T. Suetsugu, M. Fujii, K. Shinoda, S. Mori and K. Iked, "Class DE high-efficiency tuned power amplifier," in IEEE Transactions on Circuits and Systems I: Fundamental Theory and Applications, vol. 43, no. 1, pp. 51-60, Jan 1996

[4] D. Murthy-Bellur, A. Bauer, W. Kerin and M. K. Kazimierczuk, "Inverter using loosely coupled inductors for wireless power transfer," 2012 IEEE 55th International Midwest Symposium on Circuits and Systems (MWSCAS), Boise, ID, 2012, pp. 1164-1167

[5] K. Inoue, T. Nagashima, X. Wei and H. Sekiya, "Design of high-efficiency inductive-coupled wireless power transfer system with class-DE transmitter and class-E rectifier," Industrial Electronics Society, IECON 2013 - 39th Annual Conference of the IEEE, Vienna, 2013, pp. 613-618

[6] Tiefu Zhao, B. Pahl, Jun Xu, B. Wu, P. Nirantare and M. Kothekar, "Optimal operation point tracking control for inductive power transfer system," Wireless Power Transfer Conference (WPTC), 2015 IEEE, Boulder, CO, 2015, pp. 1-4

[7] K.Siddabattula, “Wireless Power System Design Component and Magnetics Selection”, .pdf Texas Instruments

[8] D. Murthy-Bellur, A. Bauer, W. Kerin and M. K. Kazimierczuk, "Inverter using loosely coupled inductors for wireless power transfer," 2012 IEEE 55th International Midwest Symposium on Circuits and Systems (MWSCAS), Boise, ID, 2012, pp. 1164-1167