AUTOMATIC POWER FACTOR CORRECTION USING ARDUINO

CH.Vijay[1], B. Pavan Kalyan[2], D.BharathReddy[3], Mr. S. PoornaChanderRao[4]

[1,2,3]*UnderGraduate Student, Dept. of Electrical and Electronics Engineering, GCET, Telangana, India*

[4]*Assistant Professor, Dept. of Electrical and Electronics Engineering, GCET, Telangana, India*

ABSTRACT:

In this Industrial age as wastage of power is a global concern, efficient generation of power is crucial task. These days many industries in the country face monetary losses and electrical burden which are inductive in nature and therefore causing slacking power factor. The Purpose of this project is to present a simple and economical design of an Automatic power factor correction for single phase loads. This system uses relay to switch the capacitor banks in order to correct the power factor of lagging loads. The switching operation of relay is controlled by Arduino. Arduino is programmed in such a way that it can monitor the system and calculate the power factor of the loads by sensing the signals from Current Transformer, Potential Transformer and keep the power factor above 0.9 by energizing the capacitors in parallel to the connected load by Relay switching.

Keywords*: Relay, Arduino, Current Transformer, Potential Transformer, Power Factor*

1. INTRODUCTION

By observing current scenario of technological revolution, we can say that power is very valuable. As the usage of inductive loads in industries is increasing day by day it will have an impact on the power factor value of the system due to which efficiency of the power system decreases. This causes lagging power factor that gives high penalties to consumers. The high penalty situation is tackled by the Power Factor Control. Power Factor Control is a method of reducing the disagreeable effect of loads that causes power factor to drop down to lesser than one. In A.C circuits, the power factor can be described as a proportion of the actual (Real) power that does the work and the Apparent power which is provided to the circuit. Real power is well characterized as the circuit's capacity for performing work in a specific time. This project provides continuous power factor correction without manual capacitive bank loading. The limit of engrossing the reactive power created by a heap is called Power Factor Rectification. The Reactive Power charge on your electricity bill is directly targeted against those companies who do not demonstrate clear energy efficiency use. You will find this charge itemized on electricity bill. Reactive power charges can be made significantly smaller by the introduction of Power Factor Correction Capacitors which is a widely recognized method of reducing an electrical load and minimizing wasted energy, improving the efficiency of a plant and reducing the electricity bill.

2. COMPONENTS USED

ARDUINO UNO:

The Arduino Uno is a microcontroller board based on the Microchip ATmega328P microcontroller. It consists of digital and analogy pins that may be interfaced to various boards and circuits. The board has 14 digital and 6 analogy pins, and is programmable with Arduino IDE The Arduino board can be powered by the external 9-volts battery or by USB cable. The inputs to the Arduino are power supply, X-OR. It collects the data from input and accordingly gives commands to Relay and LCD display.

Relay

A Relay is an electrically operated switching device as it works to isolate or change the state of electric circuit from one state to another. It consists of set of input terminals and operating contact terminals.

Capacitor bank:

The Capacitor bank is a grouping of several identical capacitors interconnected in parallel or in series with one other. These banks are typically

used to counteract undesirable characteristics such as power factor lag.

Current Transformer:

Current transformer (CT) is a type of transformer that is used to reduce or multiply an alternating current (AC). It produces a current in its secondary which is proportional to the current in its primary. Current transformers,along with voltage or potential transformers, are instrument transformers.

Potential Transformer:

The potential transformer is a device used to transform voltage of higher value to a lower value. The voltage stepped down by the potential transformer to a safe limit value which can be measured by an ordinary voltage instruments like voltmeter, wattmeter, etc.

Zero Crossing Detector:

The zero crossing detector is device which converts sinusoidal signal into square signal. The output of the Op-Amp is zero whenever the sinusoidal signal have a value greater than zero and the output becomes zero whenever the value becomes less than zero. Thus the zero crossing detector converts the signals.

Liquid Crystal Display (LCD)

liquid Crystal Display - LCD is very basic module and is used very commonly in various circuits for display purpose. LCD display is preferred over LED display and seven segment display. LCD's are easily programmable, economical and can easily display characters, animations. A 16× 2 LCD display is used to display power factor value.

3. BLOCK DIAGRAM

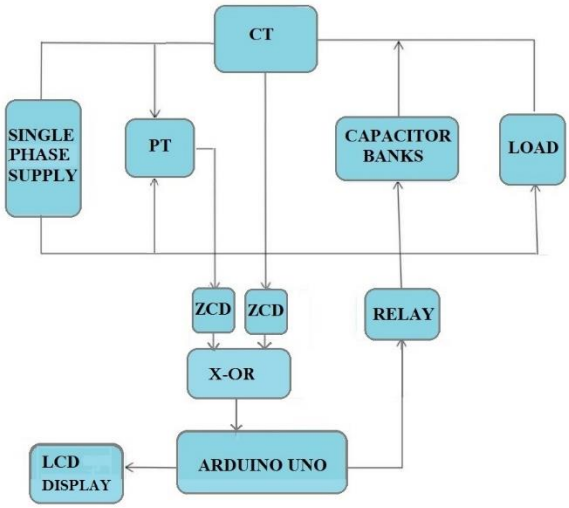

Fig1.Block diagram of Automatic Power factor correction

4. WORKING

The voltage or current waveform has a sinusoidal waveform with a wave cycle of 360 degrees which when converted into time seconds it is 20 milliseconds (Frequency = 50Hz, T=1/F = 1/50). When the load is applied the current waveforms changes its every zero-crossing position depending on the characteristics of the load. Irrespective of load the time period is similar but the every zero crossing of the current waveform changes whereas the voltage waveform remains in the same position. So the voltage is used as the reference waveform to determine the time variation or time at which current waveform starts. The difference in the every zero crossing of the voltage and current waveforms is known as phase angle difference. This phase angle difference is used to calculate the power factor as the value of the power factor is the cosine of the Phase angle difference between voltage and current.

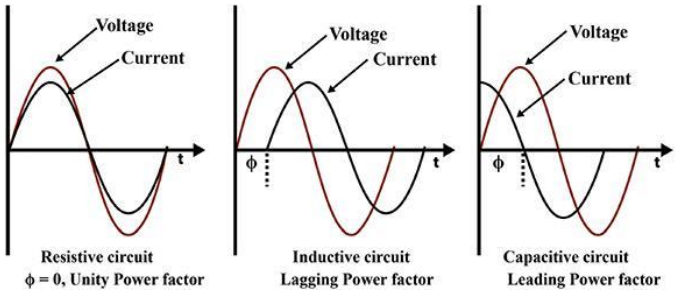

Fig 2: Different types of power factors

As mentioned above one cycle of the waveform is 20 milliseconds. The sinusoidal waveform contains a positive and negative half cycle. The waveform

touches zero mark and enters negative cycle or positive cycle for every half cycle i.e. at 180 degrees which when converted into seconds it is 10 milliseconds, this process is known as zero crossing. But the zero crossing remains the same at 10milliseconds. So when load is applied there is a difference between the zero crossing of voltage and current waveforms. The difference in their time of zero crossing is noted and converted into degrees. This value is known as phase angle difference .The power factor is the cosine of the phase angle difference of the voltage and current waveforms. So, the obtained phase angle difference gives us the value of power factor. The power for the Arduino and other components is supplied by a 5V DC supply.

The two Op-Amps converts the sinusoidal signal into square signal. The square waves from the output of the Op-Amps is fed to the Exclusive OR(X-OR) gate. The output of X-OR gate is phase angle difference which is given to Arduino. The cosine of the phase angle difference gives the power factor value. If the power factor is less than 0.9 then the capacitor is switched on .

5. FUTURE SCOPE

In case of automatic PF correction, if the load is changing frequently, the numerous switching of capacitor bank may cause harmonic problem. Suitable filter design as well as an optimum algorithm design can be done based on the frequent load change pattern to avoid regular switching of capacitor bank. A comparative study on the location of correction equipment may be employed in the field to find out the optimum location referring to maximum utilization and savings. This project can be extended using Zigbee technology, which increases operating wireless distance. The system can also be extended using GSM technology which sends the alerting SMS messages about the power factor correction to the authorities.

CONCLUSION

This project has proposed the advanced method of the power factor correction by using the microcontroller which has the many advantages over the various conventional methods of the power factor compensation. The switching of capacitors is done automatically by using the relay and thus the power factor correction is more accurate. Installation capacitor bank for power factor correction will obtain profitable both sides consumer and electric flow. Installation of capacitor bank can help in deduction of reactive current use further minimizing the losses. By considering all characteristics of the power factor it is obvious that power factor is the most important part for the utility at company level as well as for the consumer position. Utility companies get relieve from the power losses while the consumers are also free from low power factor featured penalty charges.

The automotive power factor correction using capacitive load banks is very capable and can accomplish the circuit as it reduces the cost by decreasing the power drawn from the supply. As it operates automatically, manpower operator is not, required and this Automated Power Factor Correction using capacitive load banks can be used for the industries purpose at large scale in the future to urge benefit to the system efficiency and saving energy which can be contribution in conservation of energy.

REFERENCES

[1] Design & Implementation of a Microcontroller Based Automatic Power Factor Rectification System for Different Loads.Md. Mayen Uddin; Abdullah Al Mahmud; Naeemul Islam.2019 1st International Conference on Advances in Science, Engineering and Robotics Technology (ICASERT)Year: 2019

[2] W. Ali, H. Farooq, M. Jamil, A. U. Rehman, R. Taimoor and M. Ahmad, "Automatic Power Factor Correction for Single Phase Domestic Loads by Means of Arduino Based TRIAC Control of Capacitor Banks," 2018 2nd International Conference on Energy Conservation and Efficiency (ICECE), Lahore, 2018, pp. 72-76.

[3] Y. Kabir, Y. M. Mohsin and M. M. Khan, "Automated power factor correction and energy monitoring system," 2017 Second International Conference on Electrical, Computer and Communication Technologies (ICECCT), Coimbatore, 2017, pp. 1-5.

[4] M. B. Khan and M. Owais, "Automatic power factor correction unit," 2016 International Conference on Computing, Electronic and Electrical Engineering (ICE Cube), Quetta, 2016, pp. 283-288.