Analysis of Different Approaches for Utilization of Pulsed Power

[1]Madhu Palati, [2]Sinchana S, [3]Aditi D A, [4]Awati Spandana

[1]Assistant Professor, EEE Department, BMSIT&M, Bangalore, Karnataka, India.
[2,3,4]EEE Department, BMSIT&M, Bangalore, Karnataka, India.

Abstract: The increasing Research and Development in the field of High energy density devices like Microwave tubes, Lasers etc. have led to the development of various circuit models for the production of Pulsed power. Pulsed Power is a term used when stored energy is discharged as electrical energy into a load as a single or multiple short pulse of very high power and energy with a repetition rate that can be controlled. In this paper, various electrical pulse circuit configurations that are used in different applications have been analyzed. The high-power pulses studied here are found to have an overall duration in the range of few nanoseconds to few microseconds.

***Index Terms* – Pulse repetition frequency, pulse duration, pulse electric field.**

I. INTRODUCTION

The science and technology which deals with fabricating of electrical energy over a comparatively long period of time and releasing it in a very short duration of time which results in the production of enormous amount of energy is called Pulsed Power. Energy is gathered at low power and low density from a long duration voltage pulse in the primary energy source and it is accumulated in huge capacity energy storage. After that the energy is swiftly released with a squeezed time and volume. Finally, the power is delivered to the load with enormous amount of power with in a short duration of time at much smaller volume. This serves as the essential idea of pulsed power.

Pulsed Power technology involves possibilities of producing

- Current in terms of several hundreds of Mega amperes.
- Voltage in terms of several Mega volts.
- Several hundreds of trillions of Joules per second of energy.
- Several hundreds of millions of watts per square centimeters of power densities.
- Millions of atmospheres of pressures.
- Millions of degrees Kelvin of temperature.

Main components of any high-power pulse circuits are shown schematically in the figure 1

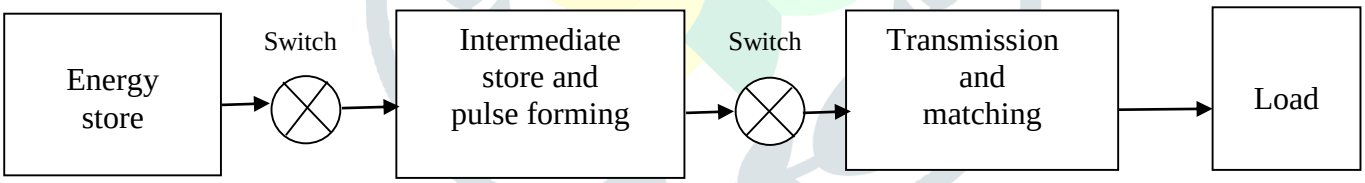

Figure 1 Main Components of a Pulsed power system.

As shown above a typical scheme is always based on an energy store which could be Mechanical energy (springs and Flywheels), Chemical Energy (Batteries), Electrical Fields (Capacitors), Magnetic Fields (Inductors) etc. However, Capacitor banks and Marx generators are widely used. Energy storage is one of the prerequisites for pulsed power applications in which charging takes place at relatively slower rate and at low power densities, thereafter the power is discharged quickly by triggering a terminating switch. This ensures large power production, ensures the required rise time and pulse duration with pulse conditioning. Lumped components are used to construct slow pulsed power systems (µs and ns range) and Transmission lines are used to construct fast pulsed power systems (ns and ps range). Diagnostics, Power controls and other ancillary elements are also to be considered for a good functional high-power pulsed power generator.

The unique advantage of Pulsed power is its very high peak-to-average power ratio which ensures exploitation of threshold and non-linear effects. This makes it suitable for applications in the medical field since the membranes of the biological cells will be opened by strong pulsed electric fields in an irreversible manner. The high peak-to-average power ratio can suppress competing heating processes. Another main advantage is its short pulse duration which allows it to exploit the time-domain for example in radar systems [7-10].

Emphasis is given on the following applications in this paper:

- Electrostatic Precipitators.
- Lasers.
- Microwave tube.
- Mercury free plasma UV lamp.
- Sterilization.
- Pasteurization.

II. DIFFERENT APPROACHES

1. Electrostatic Precipitators

Electrostatic precipitators are filtration devices that are used for controlling air pollution particularly at industrial facilities and power generating stations since they use an electric charge to remove either solid particles (dust) or liquid droplets in smokestacks and other flues. The overall performance of the electrostatic precipitators is affected by HV pulsed power supply. Efficiency of the Electrostatic Precipitators was found to increase with pulsed power since the voltage is impressed only for a very short duration and hence the chances of short circuit were found to be less over conventional continuous DC supply [10].
Analysis of a µsecond pulsed power supply which was designed with a high voltage solid-state switch for observing the performance of the Electrostatic precipitator installed at 500MW Coal power plant is been made. The ratings of the designed pulsed power supply were found to be 70kV, 400mA with pulse width of 140µs and a maximum pulse repetition of 200pps (pulse per second).
Comparison was made between conventional DC supply and Pulsed power by applying the respective voltages across the plates of the Electrostatic precipitators and results were studied.

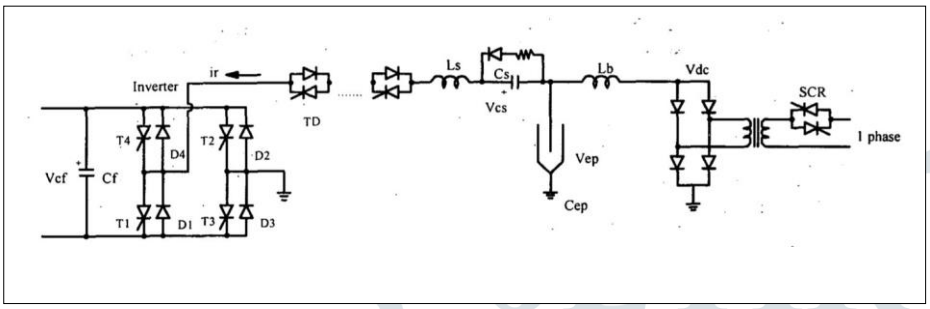

Figure 2 Proposed Circuit

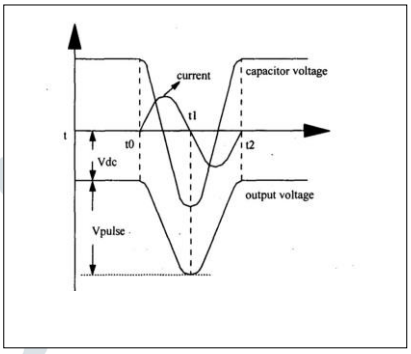

Figure 3 Output of circuit shown in figure2

The proposed topology [1] was as shown in the figure 2. As seen from the circuit it is found to contain a controllable dc power supply containing SCRs, an inverter based pulsed source of 5kV, a HV solid state switch TD, resonance tank L_s, L_c and a preventing inductance L_b. The output voltage applied to the Electrostatic precipitator was found to be a negative polarity DC voltage which was rectified that resulted in the formation of a corona amongst the collecting plates and the electrodes. In the output there was a voltage produced which was in the form of pulsed trains that were super imposed on the base voltage i.e. DC. The output pulse voltage obtained was found to have a peak voltage of 70kV and pulse width of 140µs.

Figure 3 illustrates the steady state pulse formation technique of the proposed scheme. Prior to the generation of the pulse, Vcs is the charging voltage given to the capacitor C_s. The pulse recurrence rate could be controlled up to 220pps by investigating the pulse period. The capacitor Cs which is meant for holding the charges, the Electrostatic Precipitator capacitor C_{EP} and inductor Ls when the HV solid state switch TD is closed form a series resonant circuit. Switching status of the inverter decides the involvement of 5kV in the resonant circuit as follows:
-Turning on T1 and T2: This forward biases T1, T2 and TD. V_{cs} and V_{cf} get added which reverse the direction of i_r during t1.
-Turning on T3 and T4: This forward biases T3, T4. V_{EP} and V_{cf} get added. When i_r becomes zero by the diodes of TD, then a single voltage pulse is generated and oscillations of resonance get stopped. The resonant oscillation gets stopped and one voltage pulse gets generated. By controlling this pulse-time interval the pulse repetition rate could be varied up to 200pps. Inverter compensated for the losses of the circuit and also built up the pulse voltage. The proposed circuit was found to be bulky and was not flexible for other applications.

2.Lasers

A 2kV, 40A pulse generator is been designed for this purpose. Analysis of this design makes us realize that the generator is made up of power semiconductor devices and is devoid of a HV pulse transforming device and HV DC supply. A boost converter array consisting of IGBTs, diodes LC circuits and a series connection of IGBTs and capacitors is been utilized for the design purpose which is basically a Marx circuit. The proposed circuit is found to be reliable and is suitable for generating high voltage pulses. It has simple structure i.e., to produce an output of n times the input voltage, n number of diodes, switches, capacitors and inductors were to be used.
The proposed circuit was basically a transformation of Marx circuit. The resistors of the Marx circuit which are used for charging purpose are replaced by diodes and the spark gaps that used for discharging in the Marx circuit are replaced by inductors and power semiconductor switches. In comparison to the conventional pulsed power sources, the proposed system utilizes power semiconductors as switches which enable it to have a high operational frequency up to several kHz. Since these kinds of switches are controllable, the pulse width could be varied as and when required. The proposed circuit is also found to have an important feature which is the clamping operation against over-voltages which is achieved by the capacitors across the switches [2].

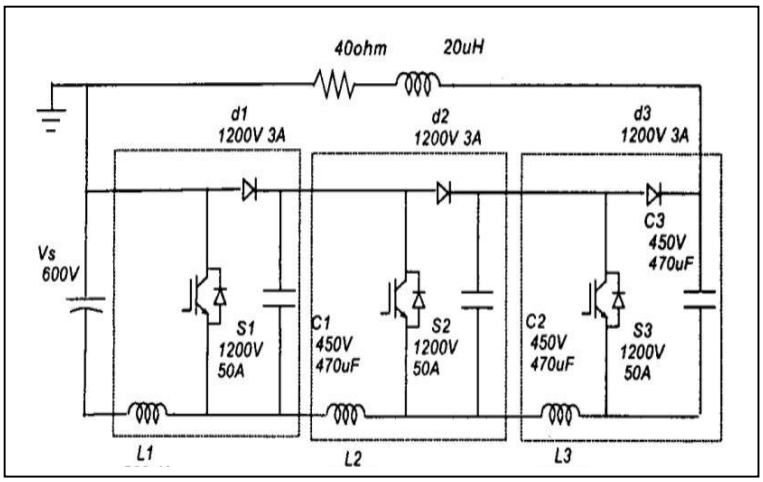

Figure 4 – Circuit Configuration

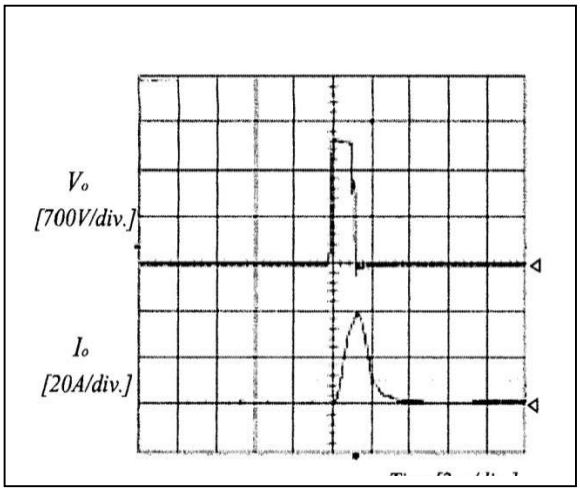

Figure 5 - Output

The proposed circuit is found to give rise to HV pulses at the on position of switches. As shown in the Figure 4, 1200V, 50A IGBT's are used as a single switch and 3 IGBTs are used as shown. Pulse width is changed from 1µs to 5µs at 1 kHz operation. Figure 5 shows the high-voltage output characteristics. It is to be observed that the pulse width is variable around 1µs to 5µs.

The proposed circuit is found to have merits such as easy control of pulse width, compact, long life, low sensitivity to difference in drive signal etc. The main disadvantage is that the power rating and the rise time cannot be varied simultaneously.

3. Microwave Tube

A HV dc pulsed power source developed for this purpose is observed to have different features like feasible control of the power factor (pf), pulse width i.e. T_{ON} and the amplification of the pulse produced. Continuous output pulse is obtained which has voltage variation of -50kV with PRF of 10Hz to 1 kHz and pulse duration of 10µs to 100µs. This system is observed to have made of continuous connection of pulse switching modules so that a pulse having the characteristics like large power, large amplitude of the voltage is produced as an output which is flexible and compact so that it could be used in various fields which demand high power. Hence there is a continuous connection of 2 modules of -25kV, 10A pulse power sources in order to obtain an output pulse having a negative voltage of 50kV and 10A current [3].

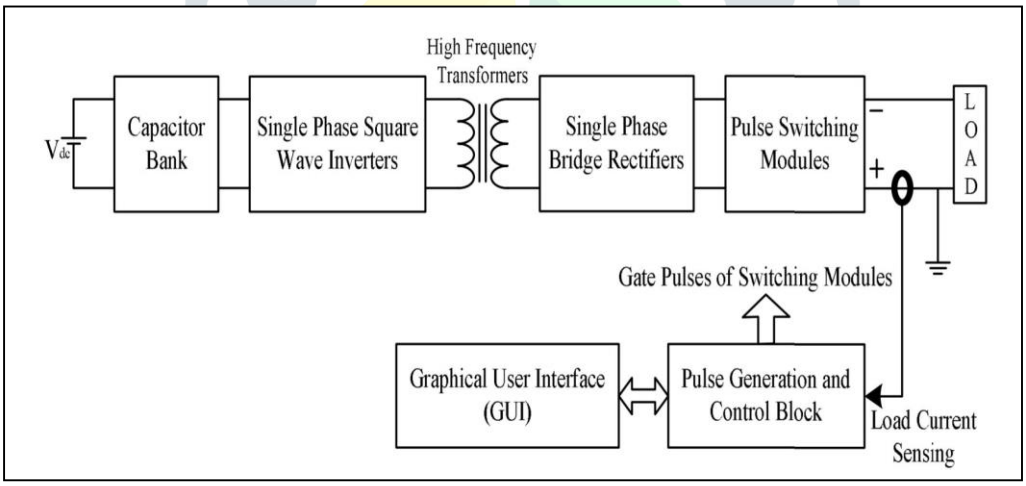

Figure 6 Block Diagram of the proposed topology

As observed from the figure 6, basic topology is found to contain bank of capacitors, step up transformer, 1Φ inverter, 1Φ rectifier, modules for switching of pulses, wireless control unit. The capacitor bank present at the source side of the square wave inverter regulates the rectified DC voltage. The regulated DC input voltage is then subjected to square wave inversion by 1Φ high frequency H-bridge inverter. Then the voltage is stepped up by the high frequency transformer which also provides isolation. Later, a regulated high voltage DC output is obtained from the output rectifier and the capacitor. Then switching of the DC voltage is done by the module meant for switching of pulses to give rise to pulses of desired pulse width and pulse repetition frequency. For gating the pulse fabrication, PC based wireless pulse generation and control unit with Graphical User Interface (GUI) having controlled Pulse Repetition Frequency (PRF) and Pulse Duration is developed. High voltage IGBT and freewheeling diodes are used by the Pulse switching module to generate required pulse output voltage. Optical Fiber cable provides the Gate control signal for the module. Xbee module controls the pulse recurrence frequency and the pulse duration. The proposed topology is found to have the merits like low losses, better reliability.

4. Hg free plasma UV lamp

In the field of disinfection of fruits, liquids, medicines, air coolers etc. the Mercury i.e. Hg free Plasma UV lamp is one of the most recent technologies that is been invented. The HV pulsed power source fabricated for this purpose is found to be efficient and is found to have employed a 1Φ AC-DC upf converter and a flyback converter. The system is found to have a constant pulse recurring frequency, pulse width and is found to produce an output as negative voltage of 5kV and 2.5A current with a prf of 25kHz and T_{ON} of 2µs supplied from a 1Φ AC supply. For the purpose of verification of the proposed circuit, simulation is also been performed where DC pulsed power source is been explained for the controlling fields that employ plasma. It is found to have utilized a H bridge type of design and as per the demands of the plasma process, there are DC supplies which perform the task of regulation to produce different kinds of pulse trains. HV pulsed power source is also analyzed which is basically designed on a base of push pull topology for the investigation of the performance of Dielectric barrier discharge (DBD) on the platforms of brightness and the energy consumed. To eliminate the over-currents resulting due to spark discharges a feedback system employing a microcontroller is included [4].

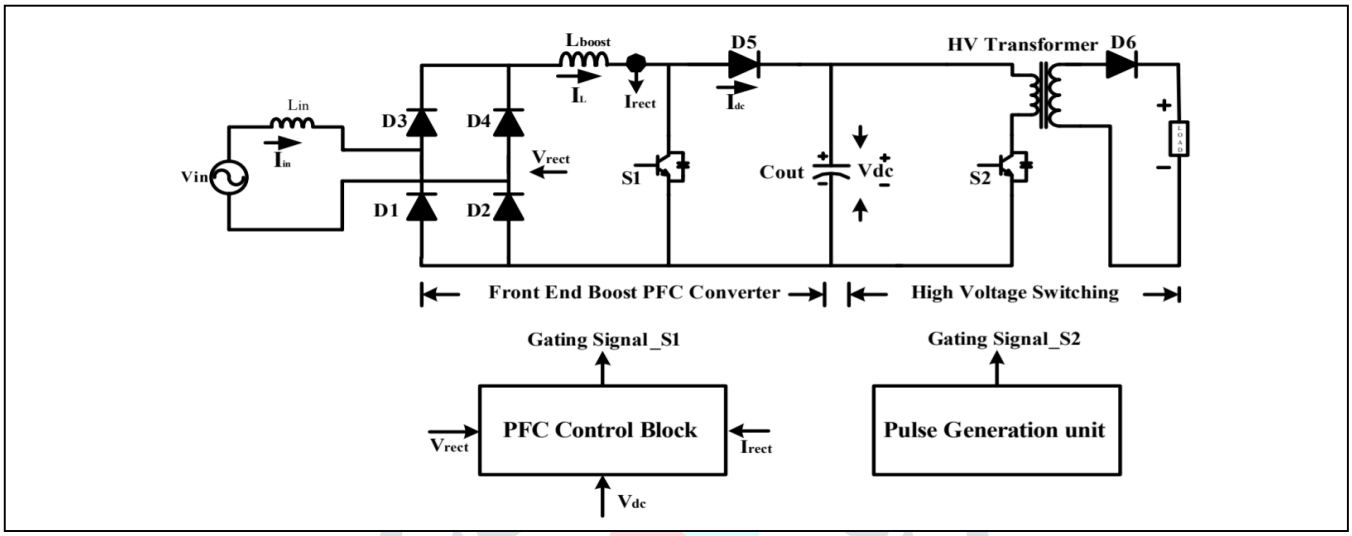

Figure 7 Schematic diagram of pulsed power supply

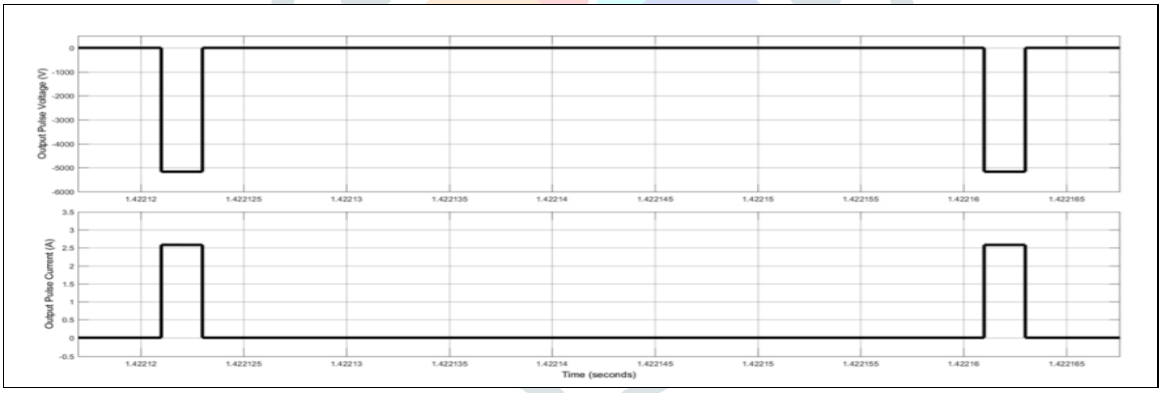

Figure 8 Output pulse waveform

HV pulsed power source for the Hg free UV lamp technique consists of 1Φ AC-DC upf converter, a generating unit of pulses, HV switching module and a transformer involved stepping up of the voltage. The 1 Φ AC will be converted into a DC regulated voltage by a AC to DC converter system. The input currents taken from the system is maintained sinusoidal and same phase as that of the final voltage by a pf correcting unit. Pulse producing unit for a HV switching purpose is found to be performing 2 functions first one being the generation of the gating signal which has a prf=25kHz and T_{on}=2µs along with the job of regulation of the output DC voltage to produce the pulse according to the requirement. The pf, the noise involved along with a PFC converter is analyzed and investigated. The proposed system includes a pulse forming network which leads to certain demerits like less improper pulse shaping, dependence of the shape of the pulse on load parameters, improper impedance equalization.

Merits of the proposed design are that it is found to be efficient and durable.

5. Sterilization

Electrohydraulic (EHD) discharge is a process where electrical discharge takes place directly inside water. A Plasma which emits ultraviolet rays that are highly intense, shock waves and also species that are found to be alive will be produced when such discharge takes place which serves as a multiple mode of action approach for sterilization which also means disinfection. Chlorella inactivation depending on the EHD is given emphasis in this section.

By carrying out EHD, the electrical energy held is released into the water across the electrode plates that are submerged in a short period which generates a high temperature and concentrated pulsed plasma in the surrounding of the dischargeable electrode. This plasma which is basically pulsed phenomenon of EHD is found to have around many appreciable impacts on the microbes like emission of highly intensive beam of UV rays, shock waves of large pressures and species that are alive [5].
Here, EHD system having more than a single electrode is designed to destroy chlorella and practical analysis of the mechanism behind the inactivation of chlorella is analyzed. A combination of Monochromator along with PMT and a high-speed CCD camera system carry out the function of finding the UV rays and bubble growth process caused by pulsed plasma, respectively and once the discharge process gets done, the chlorophyll presence is detected and scaled by a ultraviolet spectrophotometer that increases, due to the dead or inactive chlorella cells.

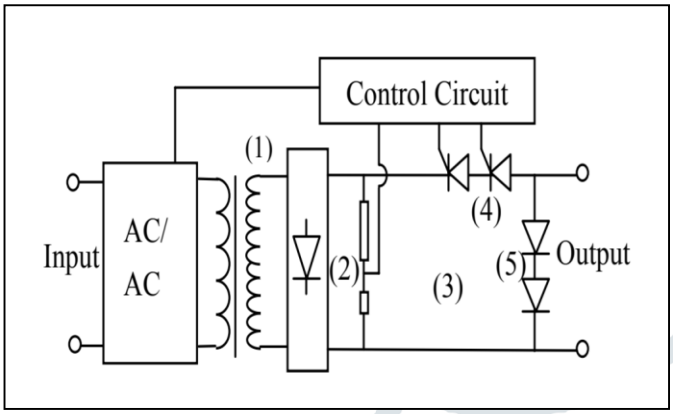

Figure 9 Proposed circuit topology

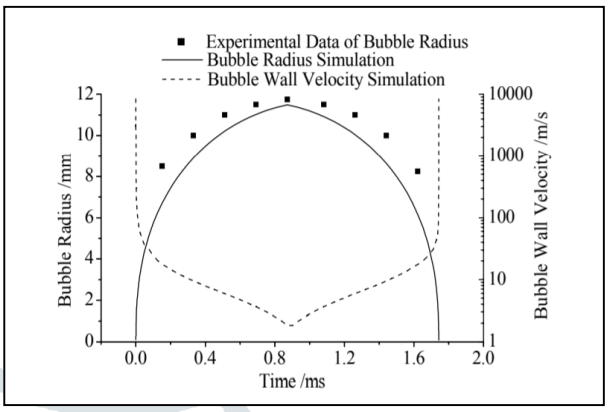

Figure 10 Result of the bubble oscillation resulting from the pulsed plasma

In the figure 9, 1 refers to the transformer that is involved in producing a negative DC. 2 refers to a basic resistance divider which evaluates the capacitor voltage (charging).3 refers to the capacitor meant for the purpose of storage. 4 refers to the semi-conductor switches i.e. a continuous connection of a pair of SCRs. 5 refers to the final pulse. Basically, there are 2 different components in an Electrohydraulic system like one is the supply which is associated with high power semiconductor switches and is capacitive and the other one is an EHD reactor which comprises of more than one electrode. Electrodes can be subjected to more than single current pulse by operating semi-conductor switches that discharge the energy via a diode like device. About 5J to 500J of energy is stored by the modules formed by combination of 2 capacitors at a relatively high voltage of -2.2kV to -5.6kV where the pulse recurring frequency is 1 to 10Hz. An extra circuit takes care of the pulse recurring frequency and the energy associated with the output produced.
The chlorella is cultured in an air incubator, in which light intensity is 6000lx and ratio of illumination time and dark time is 1:1. The inside temperature is around 25°C with a deviation of 1°C. The culture solution is made by 35g seawater salt, 1000ml purified water and some necessary nutrition. pH value is controlled around 7.5. Only 1ml of the mixture solution is sampled after each treatment to count survival chlorella number.
From the figure 10, the dependency of the radius of the bubble and the velocity of the bubble wall on each other is shown. It is found that the velocity of the bubble could attain around 1000m/s at the starting of vibration and it reduces abruptly as the radius starts increasing till radius of bubble attains it's maximum value. Then, the speed value attains 0 and begins to increase. It can also be observed that the starting speed of vibration is comparatively tiny than that present at the extreme. This denotes that size of the bubble increases at a radius not equal to 0 or when bubble is formed, it is large.
When the energy is around 5J to 10J per electrode only 75% to 78% of the chlorella cells are killed and when the energy released is around 20J about 90% of the chlorella cells are killed.

Demerits of the proposed system are that the system couldn't be used at high frequencies because of the thyristors that are used which poses a long switching time. In high voltage applications it demands the usage of withstand capacitors which increases the overall size and the cost. Advantage is that it serves as a multi-mode of action approach for sterilization and disinfection.

6. PEF Pasteurization

From time immemorial thermal heating has been used to preserve food and extend the period of storage of products like milk, fruit juices etc. But the issue with thermal heating is that it deteriorates the quality of the food by modifying the organic structures. Due to these reasons PEF i.e. Pulse Electric Field is being used as the non-heating method of preserving diary and liquid food. We can make a pulse generator using an RC circuit or RLC circuit to generate PEF of high efficiency and required wave form. Microcontroller ATMEGA 8353 is used to control the pulse frequency of the constant high-voltage that is given at the input side. The sample used here was apple juice which is found to have a very less shelf life [6].

As we are aware the storage period of apple juice is very short which is due to the microbial activities during the period of processing. S. Cervisiae is the name of the microbials. Hence, it becomes mandatory to kill these microbes which disinfects the apple juice there by increasing it's storage period in order to get a superiority in terms of quality. The apple juice contains vitamin A and vitamin C, the amount of these vitamins decreases with thermal method if pasteurization is used. In the field of liquid and semi-solid food processing, Pulse Electric Field (PEF) is the latest non-thermal technology. PEF is a process where an electric field as high as 20 to 80 kV/cm is applied to the sample food which is kept between the pair of electrodes while giving pulses of 1 to 100 µs.

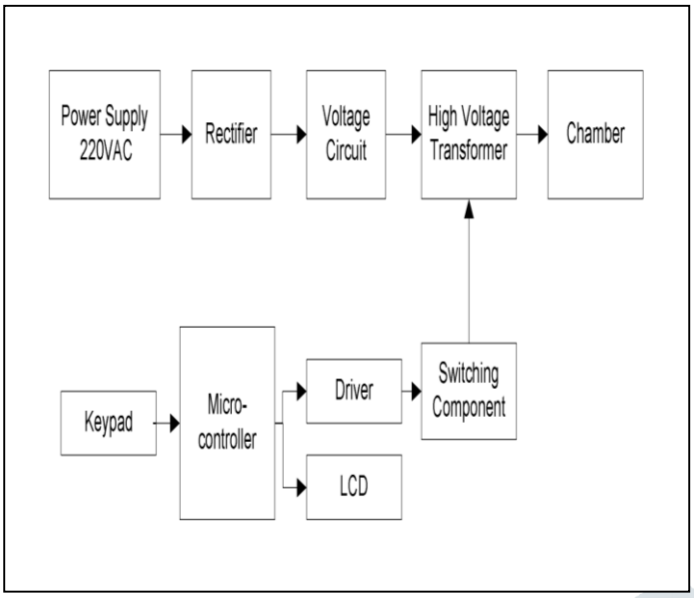

Figure 11 High Voltage Pulse Generator Block Diagram

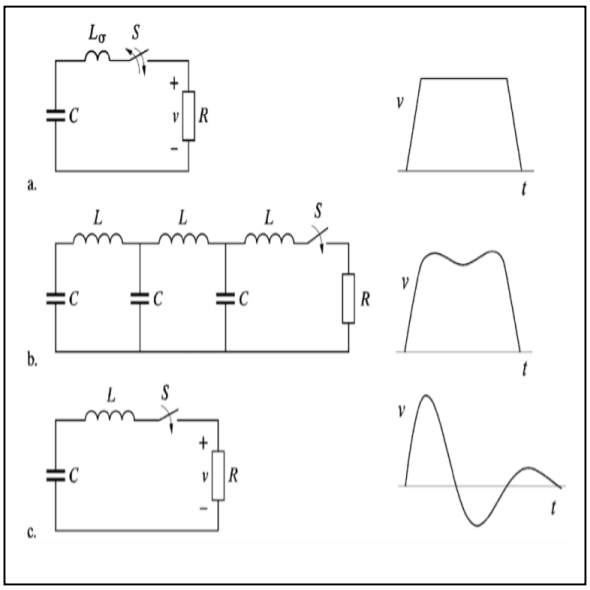

Figure 12 HV pulse generator(a), with LC(b) and with over damped oscillator (c)

The parameters to be saved in thoughts are power resulting from the electrical pulse, the duration or the overall width of the pulse, number of pulses, chamber layout. As observed from the block diagram in the figure 11, the design consists of following steps: A HV pulse formed has to be kept an eye on through keypad with highest voltage of 80kV; It is required to keep the pulse frequency as a non-variable quantity ; By the aid of a keypad, the output time period is expected to be controlled till 90 seconds at least ; A step-up transformer which has a rating of 100 kV is to be used. Micro controllers are used to carry out the job of controlling the amplitude of the voltage that is produced. Result obtained from the microcontrollers operation is connected to a voltage controller which in turn activates a relay. The voltage controller circuit utilizes relay circuit in which each relay is connected to a rectifier circuit. Based on the layout specifications, controllable high voltage is anywhere between 20 to 100 kV with an increment in terms of 20 kV scale.

As analyzed from figure 12, HV pulsed power generating circuits might be fabricated from some forms of circuit such as Resistor-Capacitor circuit (RC) and resistor-inductor-Capacitor (RLC) circuits. It is determined that the RLC circuit has better characteristics than RC circuit. A high voltage pulse generator with RC and RLC circuit generates oscillations and pulses which depends on the value of used resistors and capacitors component. High voltage (HV) transformers are then used to broaden the circuit.

High voltage pulses which must be implemented to carry out pasteurization efficiently is 20kVto 100kV. PEF pasteurization is determined to preserve the nutritional content of juice apple in preference to thermal pasteurization. PEF is a non-heating method since the fruit is processed at normal living temperature or lesser for some time which reduces the losing of nutrients from heating technique, which include vitamin A content material of apple juice.

The main advantage of this approach is Energy saving - since the energy is applied for a few micro seconds a huge amount of energy is saved whereas in thermal heating high temperature has to be applied for a longer duration of time though there is an error of about 5.41%.

III. COMPARISON OF THE DESIGNS

Table 1 Comparison of various parameters of different pulse power circuits

Applications	Voltage Rating	Current rating	Pulse width (PW) and Pulse repetition frequency(PRF)	Merits	Demerits

Electrostatic Precipitators	70kV	400mA	140µs and 220pps	Highly efficient	Circuit was Bulky
Lasers	2kV	40A	5µs and 1kHz	Compact circuit	Parameters could not be varied simultaneously
Microwave tube	-50kV	20A	100µs and 1kHz	Circuit was Reliable and Efficient	Circuit design was compact
Mercury free plasma UV lamp	-5kV	2.5A	2µs and 25kHz	Longer Life	Load dependency of the pulse shape
Sterilization	-5.6kV	2.5A	2µs And 10 Hz	Multi-mode action	High frequency operation was nil
Pasteurization	20kV	3A	20kHz	Energy saving over conventional method	Presence of error (5%)

Looking at the above table it can be inferred that each application is associated with certain advantages and disadvantages. Hence compromise has to be made if a particular application is chosen and recent research and development in this field will definitely promise better circuits with better characteristics.

IV. CONCLUSION

Different applications of the Pulsed power technology and also the designs related to the respective applications have been studied, a comprehensive comparison of the same is also made. The development of pulsed power has been made right from the period of World war II especially in the military fields. In this paper 6 applications of pulsed power are described. Apart from these, Pulsed power is also utilized in the treatment of plant cells, ion deposition, electromagnetic launcher, production of nano powder to name a few. Research is being carried out in this field which will be resulting in the invention of more reliable and affordable components for the production of pulsed power which will lead to the utilization of pulsed power in a wide variety of applications.

V. REFERENCES

I. Won-Ho Kim, Jong-Soo Kim, Iouri Kang, Geun-Hie Rim C. U. Kim, “A High Voltage Pulsed Power System for Electrostatic Precipitators”, Conference Record of the 1999 IEEE Industry Applications Conference. Thirty-Forth IAS Annual Meeting.

II. J. W. Baek, M. H. Ryu, D. W. Yoo, H G Kim, "High Voltage Pulse Generator Using Boost Converter Array", IEEE 2002 28th Annual Conference of the Industrial Electronics Society. IECON 02

III. Subhash Kumar Ram, Anand Abhishek, P. K. Pedapati, B. K. Verma, A. K. Dhakar, Rahul Varma – "Development of High Voltage Pulse Power Supply for Microwave Tube Applications", 2017 14th IEEE India Council International Conference (INDICON).

IV. Ajeet Kumar Dhakar, Subhash Kumar Ram, Brijendra Kumar Verma, Vivek Kumar Saini, Sachin Devassy, Anand Abhishek - "Simulation and Analysis of Pulse Power Supply for Mercury-free Plasma UV-lamp", 2018 8th IEEE India International Conference on Power Electronics (IICPE).

V. Y. Huang, H. Yan, S. Li, K. Yan - "Multi-electrode electrohydraulic discharge for sterilization and disinfection", 2009 IEEE Pulsed Power Conference.

VI. Ika Noer Syamsiana, Ratna Ika Putri - "High Voltage Pulse Generator Design with Voltage Control for Pulse Electric Field (PEF) Pasteurization", IEEE Proceedings of the 2011 International Conference on Electrical Engineering and Informatics, 17-19 July 2011, Bandung, Indonesia.

VII. Hansjoachim. Bluhm – "Pulsed Power Systems principles and Applications", Springer-Verlag Berlin Heidelberg publisher,2006.

VIII. Meng Wang ,"A Tesla-Blumlein PFL-Bipolar Pulsed Power Generator (Doctoral Thesis)", Loughborough University, UK,2016.

IX. Patrik Appelgren ,"Gigawatt Pulsed Power technologies and applications (Doctoral Thesis)", School of Electrical Engineering space and plasma Physics, Royal Institute of technology, Stockholm, Sweden, 2011.

X. Simon Kassel, Report on "Pulsed-Power Research and Development in the USSR", Santa Monica, CA: RAND Corporation, 1978. https://www.rand.org/pubs/reports/R2212.html.

XI. David Hosansky, "Electrostatic precipitator", https://www.britannica.com/technology/electrostaticprecipitators