Redesign the Sheilding Cylinder to Minimize the Grid Outage due to Shunt Reactor Failure

[1] Sanjay Kumar,[2]Prof. Madhu Upadhyay

[1]M Tech Scholar,[2]Head of Department
[1]DEPARTMENT OF ELECTRICAL ENGINEERING,
[1] NRI INSTITUTE OF RESEARCH AND TECHNOLOGY,
BHOPAL,INDIA.

Abstract: Grid outage is the state of complete absence of electricity at the consumer's end. There are many causes of power failures in a Grid. One of the causes is the shunt reactor failure at transmission substations. Shunt reactor is an intensive key component of transmission substation for maintaining continuous flow of electricity. It is installed for improving the efficiency of transmission line through reactive power compensation and to offset the capacitive effect of the transmission line and to regulate the voltage and reactive power. In case of failure of shunt reactor in long transmission line system, voltage of system shoots up which may lead to forced outages of the system. In this paper ,present here to work on the development of new robust, operator friendly & more reliable earthing lead of shield cylinder that is very important the part of shunt reactor.

Keywords: Shielding Cylinder, Shunt Reactor Failure, Grid Outage, Redsign etc.

I. INTRODUCTION

In power systems, transmission lines are conductors that are designed to carry high and extra high voltages to transmit power over a short, medium and long distance but as the length of the line increases Ferranti effect occurs due to directly proportional of line length increases with the capacitance of the line. In power system, transmission lines plays critical role in the part of the economy, they increase the revenue of the active power and reduced the costs due to high reliability, low maintenance costs ; low internal losses that reduce the operating costs (ABB, 2017). Transmission lines are the sets of conductors that carry electrical power from the generating stations to the substations to deliver the power to the customers.

Shunt reactors in power systems they are an investment for today and for the future. A shunt reactor is commonly used for the compensation of reactive power in long high-voltage transmission lines and in cable systems by controlling the line voltage. It is very critical for the voltage system profile to compensate the reactive power and this is helpful for the power factor improvement, decrease of losses and thus increasing the energy efficiency of the system.

In high and extra voltage, long and medium transmission lines they generate more reactive power due to their shunt capacitance that is proportional to length of the line. It is necessary to transmit power and to support voltage as reactive power at light/low loads have the undesirable effects such as: receiving end terminal voltage rises due to the low of capacitive current through the line inductance, sending end terminal voltage due to low of capacitive current through the impedance source, synchronous machines rises due with self-excitation in the event of load tripping (Sharma, 2013). It is not usual for power long lines and low short circuit power for voltage to increase by 20 percent. If not controlled the line overvoltage will minimize the life span of insulation material and results in system faults.

Shunt reactors are located at the ends of high or extra voltage transmission lines, at some installations they are isolated during the period of high circuit loading. Shunt reactors they are classified into two types, dry type and oil immersed type reactors. Dry type reactors have lower operational costs and lower losses, usually they are installed to the tertiary winding of the transformer that is connected to the high voltage line to be compensated and their rated voltage is limited up to 24.5 kilo volts with also kilo-volt ampere rating. Oil immersed reactors mostly are connected to one or both ends of transmission lines and the voltage is not a limitation, as they are used for the line connection to control the voltage of the line..

II. BACKGROUND

A dry type reactor it fails to operate due to the faults, **phase to phase faults on tertiary bus results in high magnitude phase currents**, phase to ground faults results in low magnitude ground current as this fault depends on the size of resistor and grounding transformer, **turn to turn faults occurs within a reactor and it results in a very small reactor change phase current**. A line or bus connected and oil immersed reactors can also failure due to the failure of the equipment such as bushing and insulation failure because they results in large changes in phase currents magnitude, a turn to turn faults within the reactor winding as the results in small change in current,.

change in impedance reactor, increasing operating temperature, internal pressure tank and gas accumulation, lastly a low oil and loss of cooling are miscellaneous failures.

Protection of the shunt reactor is similar to that of transformer with the size and is very critical in power systems including the reactor electrical protection and the reactor non-electrical protection. Reactor primary protection includes both overcurrent and differential protection (Das, 2017). High impedance differential protection is differential protection scheme and is connected to dedicated Current Transformers, this primary protection it does not detect inter turn faults but it prevents faults from the winding to the core, faults between the winding of different phases and winding to winding faults. Turn to turn protection scheme is directionalised to see zero sequence current flow into reactor, the relay device cannot operate for external faults. This relay setting ranges between 5 to 10 percent of the reactor rating and its tripping cycles is delayed by 15 cycles.

Phase distance relay compares the ratio input current and voltage to balance the relay its setting is applied in zone 1, zone 2, zone 3, overreaching tripping and reverse blocking. Zone 1 relays they detects faults on the first 80 to 90 percent of the protected line and they operate with no time delay.
Zone 2 relay detects faults anywhere on the protected line and relay need to be set at minimum of 125 percent of the protected line impedance.
Zone 3 is set to detect close-in faults on lines at terminals remote line and the setting is at 150 percent of the protected line impedance (Sleva, 2009).

Detecting the ground faults on the transmission line, a directional time and instantaneous overcurrent relays are used. Directional are used because lower fault clearing times can be achieved by installation of relays that can distinguish between reverse and forward directions short circuits. Instantaneous overcurrent ground relays need to be set above maximum fault current that is flowing through fault line in order to limit fault conditions since they are not obvious (Singh, 2009).

Purpose of this research is to investigate the failure of shunt reactors during manufacturing to avoid consequences as follows:

- Financial losses to the tune of 50 crores per day of outage to the utility.
- Increased Losses in transmission system.
- Available power shall be less to consumers. Disrupted power supply.
- Less efficiency.

III PROPOSED METHOD

Cross Functional Team constituted which included members from Quality, Engineering & Production.
Manufacturing process of shield cylinder was scrutinised.
Process of soldering of copper cable to make connection between cylinder and lead raised doubt.
Various alternatives for soldering process were sought.

Fig 1 .ROOT CAUSE ANALYSIS

The earthing lead was examined for flexibility.

It was observed that due to soldering operation lead breaks off in 2-3 bending after soldering operation.

The process of soldering of lead to earthing strip was found to have defects such as loose connections, sharp edges etc.

Corrections & corrective actions.

Trigger points for improvement

Fig 2The earthing lead needed to be reviewed.

The process of soldering needed to be reviewed

Cause of Breakage of Earthing Lead

The solder flows up the stranded wire through capillary action. Once the fine strands of the wire are bonded together by the solder, the wire becomes very stiff, and brittle. This is not a result initially of the metallurgical state of the junction, but the mechanical difference between a solid "bar" and one that is comprised of many fine fibres that can move in relation to each other.This stiff and brittle section of the wire is also at one of the highest stress points in the cable, and has been known to cause failure.
Hard to find out & yet more hard to repair…

Complexity of architecture
Any issue in the shield cylinder can be addressed only after complete dismantling of the reactor upto the central limb which includes- dismantling of tank,. Cutting of terminal connections & leads, Unlacing of core, Removal of windings and removal of winding covers.

This activity takes minimum 5 man days. Most of the components become unusable in dismantling process.

Item/ Process	Before Improvement	After Improvement	Result
Strip To Lead Connection	Soldering	Crimping Of Lead With Lug Rivetting Of Lug With Strip Edge Soldering Of Rivet	Since Lead Connected To Strip With Lug By Crimping, No Brittleness Due To Soldering Process Takes Place. Hence No Breakage Occurs
Earthing Lead	7//0.67mm Strands	50//0.25mm Strands	More Flexibility To Earthing Lead

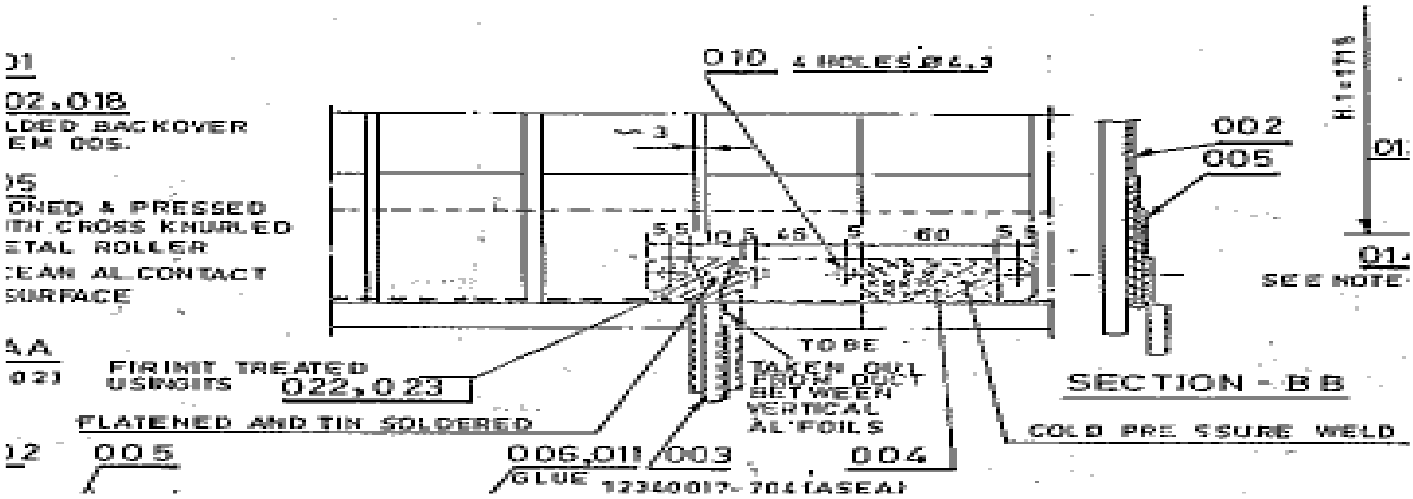

Fig. 3Before improvement

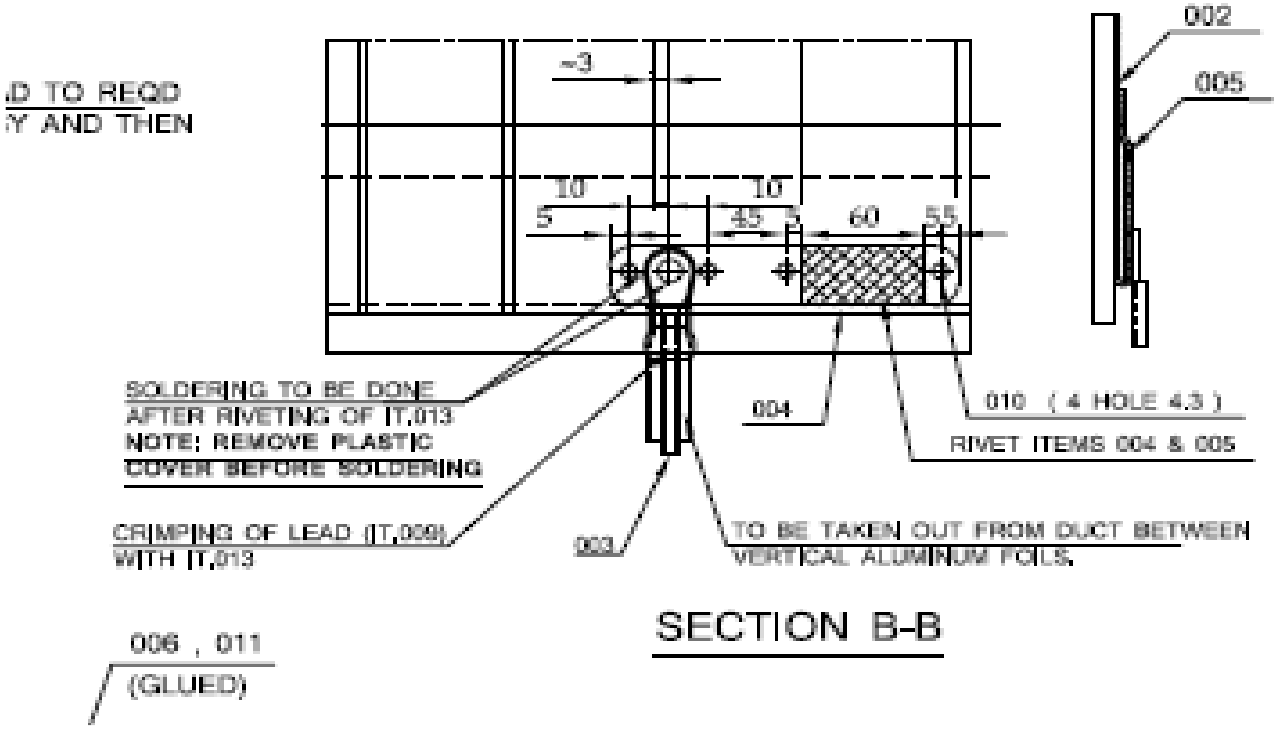

Fig 4 After improvement

IV RESULTS

Fig 5 correct way (third one)

New connection method is more flexible.No effect on copper lead as soldering process not performed on lead.No chances of loose connection or sharp edges.

Process is less skill dependent.New connection method incorporated in drawing.Subsequent reactors manufactured with improved method.These reactors passed electrical testing at BHEL works successfully

Prevention & Detection

Pull out test not possible on the job.
Continuity test between aluminium foils & earthing lead started to assure connectivity.
Routing passage designed to reduce chances of breakage by force.

V.CONCLUSION

After going with validation of results and observations following points came out for conclude

- The issue of shield cylinder may look small but its repercussion to the reactor is HIGH.
- Any Rework in shield cylinder involves repairing the product from beginning.
- Big door hang from small hinges.

REFERENCE

[1] Martin J.Heathcote C Eng FIEE ,The J&P Transformer Book.

[2] IEC 60076-Part 6.

[3] IS 5553-Part 2.

[4] TRANSFORMER(BHEL),Second Edition ,Bhel.

[5] S.V.Kulkarni & S.A.Khaparde,Transformer Engineering Design & Practice.

[6] CIGRE TB655 (Final Report of WG A2.48), Technology and Utilisation of Oil-Immersed Shunt Reactors, May 2016.