GWO AND CSA BASED SHUNT ACTIVE POWER FILTER FOR CURRENT HARMONIC MITIGATION

[1]S. MS Iyer, [2]Rajkumar Jhapte

[1]M-Tech Scholar, [2]Associate Professor,
[1]Department of Electrical and Electronics Engineering,
[1]SSTC, Bhilai (C.G.), Bhilai, INDIA.

Abstract : In present days with the increasing demand for electricity, the quality of electricity at the end of the distributors is also becoming an important objective to be achieved. Due to the introduction of electronic power conductors that are more prone to fluctuations, equipment for end users has become more susceptible to power quality. All these nonlinear loads required harmonic current to function as a result of these harmonic components of the load current quality of the power system being reduced. Ultimately SAPF creates harmonic current equivalent as that creates by the nonlinear load on the other hand reverse in phase. Subsequently that only the fundamental component of current movement from the mains power and power factor of stream source sustained near to unity. In this paper a voltage source converter is used with PWM technique for governing the switching of the converter. Instantaneous Reactive Power Theory are used to generate the reference current signals and also called as the P-Q Theory. This paper demonstrations the solicitation of the proposed method for elimination of harmonics under different load condition.

***IndexTerms* - Shunt Active Power Filter (SAPF), Optimization, PI controller, Total Harmonic Distortion (THD), Grey Wolf Optimization (GWO), Cuckoo Search Algorithm (CSA), Point of Common Coupling (PCC).**

I. INTRODUCTION

The term power quality is the term used to recall power at the point of consumption where it is very thrilling and the distribution network must be maintained at the consumer side. Power quality is the perception of accomplishing the predictable output for device provision by supplying beneficial power and grounding to the refined equipment [1]. The concern produced by power quality is the failure of over voltages, voltage loss, and increased current due to harmonics, etc. The use of active, passive, hybrid filters in series; shunt or combination of both for different configurations such as single-phase two-wire, three-phase three-wire, and three-phase four-wire has helped balance linear and non-linear loads together with harmonic mitigation [2]. A three phase active series filter and shunt connected passive filter which is dignified by the dual IRPT theory, the active filter supports in the reimbursement of the reactive power and harmonics [3]. The reimbursement coordination espoused delivers recovering filtering features and also diminishes the cost of consecutively [4]. These nonlinear loads are the most important source of harmonic creation in the power system network which is detrimental. In present days the main objective of the power system engineers is to eradicate the undesirable harmonics from the complete power system to recover the power quality of the power system. Largely the core foundations of the harmonics are ASDs, Power electronics converter etc. Pureness of the voltage and current waveform expresses the quality of power. Annoying Harmonics are created in the power line due to the nonlinear loads. Harmonic existing in the line current creates additional voltage fall in the line impedance due to which source voltage and current waveform correspondingly get inaccurate [5-9]. Current detecting of energy usefulness queries is the key aim of Filters. Filters respond unstable currents, neutral current, reactive power, and harmonic distortion, which are the supreme recurrent power quality reliant on anxieties. Within the AC transmission systems, Filters skill has now progressed a practicable technology to afford reactive control, load handling and static current. This nurtured with progression in terms of definite organisms, control approaches and solid-state devices over the past quartier period [10-12]. On the base of the demands and control procedure, the framework to be applicably picked, these tasks are proficient independently. Our aim is to design GWO and CSA Optimized PI Controller based APF for mitigate the current THD.

A) ACTIVE POWER FILTER

SAPF with dc bus alignment is equivalent as the static compensator recycled for the reimbursement of reactive power in the power system network. SAPF is ultimately a PE device which is used for fabricating harmonic current of equivalent magnitude and reverse in phase to that produced by the nonlinear load. Voltage source converter is the central foundation of the SAPF which gives the necessary recompense [1].

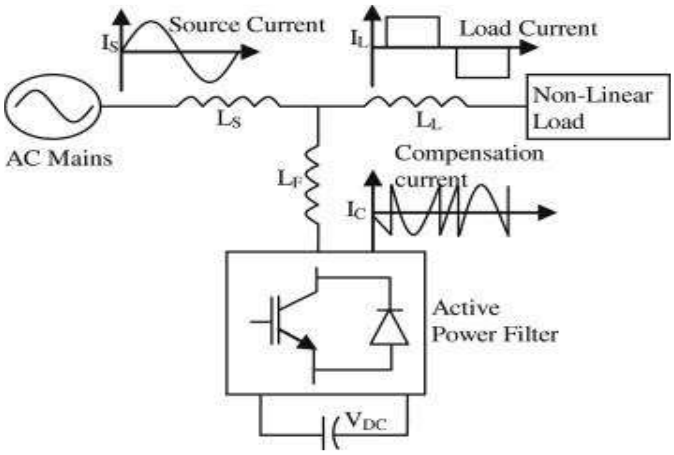

Figure1. Active power filter

II. OPERATING CONDITION OF SAPF

Basic recompense principal of the SAPF is shown in the figure2. SAPF are coupled in shunt with the load to remain observer the load current and inoculate the current into the scheme affording to load current. On witnessing of load current, reference reimbursing current are engendered by the APF. For compensating the load harmonic current SAPF uses the converter of current controlled voltage source topology based on the IGBT. The core role of the SAPF is to remove the harmonic current generated by the nonlinear load by injecting the same amount of current but opposite in the phase.

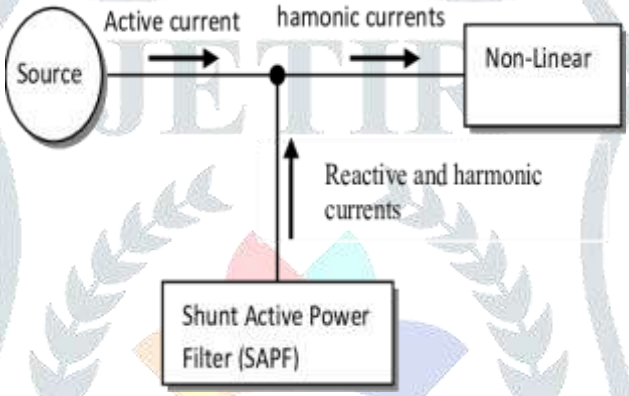

Figure2. Operating principal of SAPF

III. INSTANTANEOUS REACTIVE POWER THEORY (IRPT)

The mechanism approach block illustration based on the philosophy of instantaneous reactive energy can be originate in fig 4.1.This segment familiarizes a new control scheme established on the theory of instantaneous reactive power theory. Instantaneous active and reactive power is calculated at the point of common coupling by sensing load currents and voltages. The three phase load voltages filtered by Clark transformation are converted into two phase (α-β) orthogonal coordinates given as(v_0, v_α, v_β).

$$\begin{pmatrix} v_\alpha \\ v_\beta \end{pmatrix} = \sqrt{\frac{2}{3}} \begin{pmatrix} 1 & -\frac{1}{2} & -\frac{1}{2} \\ 0 & \frac{\sqrt{3}}{2} & -\frac{\sqrt{3}}{2} \end{pmatrix} \begin{pmatrix} v_{sa} \\ v_{sb} \\ v_{sc} \end{pmatrix} \quad (1)$$

Likewise, the three phase load currents (i_{La}, i_{Lb}, i_{Lc}) are converted into two phase α-β orthogonal $(i_{L\alpha}, i_{L\beta})$.coordinates.

$$\begin{pmatrix} i_{L\alpha} \\ i_{L\beta} \end{pmatrix} = \sqrt{\frac{2}{3}} \begin{pmatrix} 1 & -\frac{1}{2} & -\frac{1}{2} \\ 0 & \frac{\sqrt{3}}{2} & -\frac{\sqrt{3}}{2} \end{pmatrix} \begin{pmatrix} i_{La} \\ i_{Lb} \\ i_{Lc} \end{pmatrix} \quad (2)$$

Instantaneous reactive power on the load side can be given as:-

$$q_L = v_\alpha i_{L\alpha} - v_\beta i_{L\beta} \quad (3)$$

Instantaneous active power on the load side can be given as:-

$$p_L = v_\alpha i_{L\alpha} + v_\beta i_{L\beta} \quad (4)$$

Now,

$$p_L = \overline{p_L} + \widetilde{p_L} \quad (5)$$

$$q_L = \overline{q_L} + \widetilde{q_L} \quad (6)$$

Where, $\overline{p_L}$ - DC component of p_L, $\widetilde{p_L}$ - AC component of p_L, $\overline{q_L}$ - DC component of q_L, $\widetilde{q_L}$ - AC component of q_L.

In these terms, the basic load power is transformed into $p_L$and q_LDC components and the distortion or negative sequence is transformed into $\widetilde{p_L}$ and $\widetilde{q_L}$AC components. The effective and passive power parts of DC are obtained using two LPFs. The reference current in two phase system is ;

$$\begin{bmatrix} Il\alpha \\ Il\beta \end{bmatrix} = \frac{1}{Vs\alpha^2 + Vs\beta^2} \begin{bmatrix} Vs\alpha & Vs\beta \\ Vs\beta & -Vs\alpha \end{bmatrix} \begin{bmatrix} p \\ q \end{bmatrix} \quad (7)$$

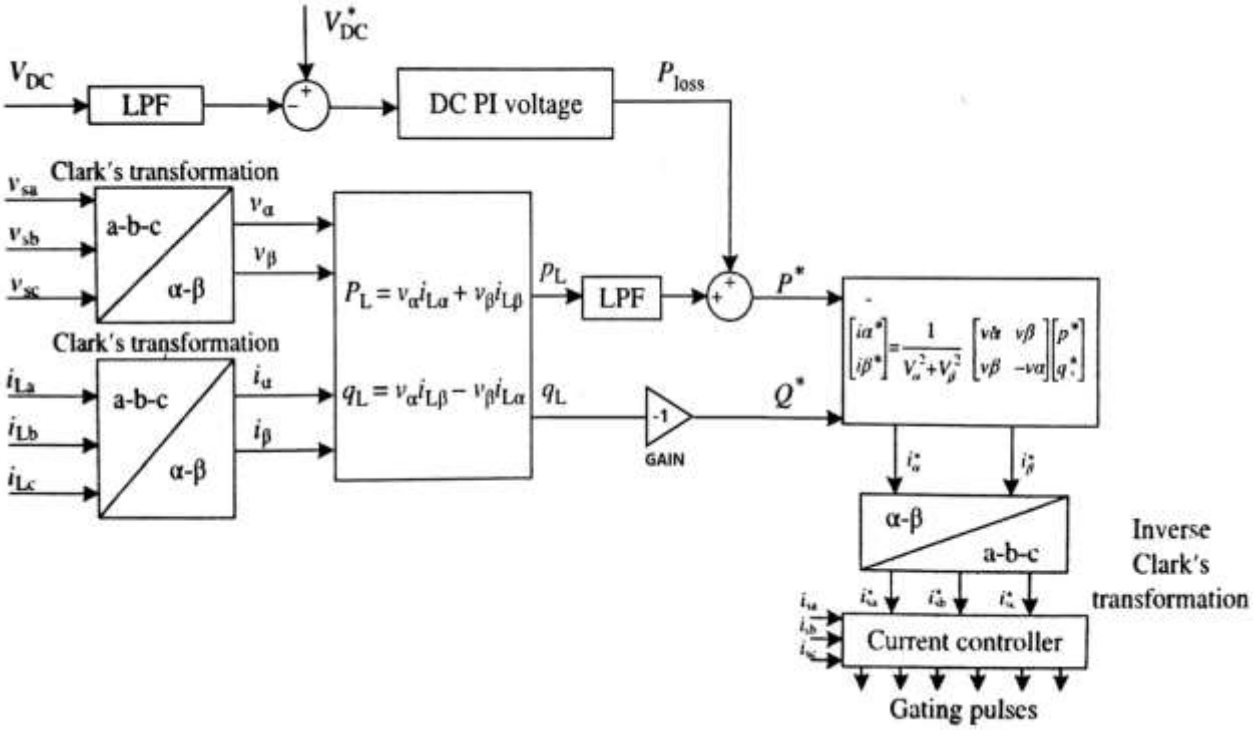

Figure3. Instantaneous Reactive Power Theory based control algorithm

Isa* Isb* Isc* are the reference three-phase storage signals

$$\begin{pmatrix} i_{sa}^* \\ i_{sb}^* \\ i_{sc}^* \end{pmatrix} = \sqrt{\frac{2}{3}} \begin{pmatrix} 1 & 0 \\ -\frac{1}{2} & -\frac{\sqrt{3}}{2} \\ -\frac{1}{2} & \frac{\sqrt{3}}{2} \end{pmatrix} \begin{pmatrix} v_\alpha & v_\beta \\ -v_\beta & v_\alpha \end{pmatrix}^{-1} \begin{pmatrix} p^* \\ q^* \end{pmatrix} \quad (8)$$

IV. PI CONTROLLER

PI Controller is basically used for tuning the parameter which is K_p and K_i. Here in this model PI controller is basically used for tuning the parameter of the V_{dc} and $V_{dc\ reference}$ signal. Voltage and reference voltage is set as input to the PI controller for the reference current generation. Productivity of the PI controller is deliberated as the extreme value of the system current. Output of the PI controller consist two factor, first is active power component of the load current and the second component is losses of active power filter. For sustaining the continuous voltage across the capacitor, the output of the PI controller is taken as the peak value of the coordination current. Error signal are used for the switching of the converter switches.

V. RESULTS AND DISCUSSION

The system is simulated under nonlinear load configuration for which the approach of PI controller based SAPF. The main objective is to minimize the odd harmonic components using Cuckoo search Algorithm technique and Gravitational search Algorithm. The simulation can be performed under two optimization techniques. In this exploration work SAPF is simulated with nonlinear load which is known as DC Motor Drive load. Figure 4 depicts the simulation diagram of SAPF is done DC Motor drive load. In this work nonlinear load has been connected with diode bridge rectifier. In this paper PWM controller is used for switching the converter switches and for tuning the parameter of PI Controller GWO and CSA optimization techniques are used. Comparative analysis of THD values and PI Controller parameter tuning values are shown in the table1 and table2 respectively.

5.1 Simulation Model

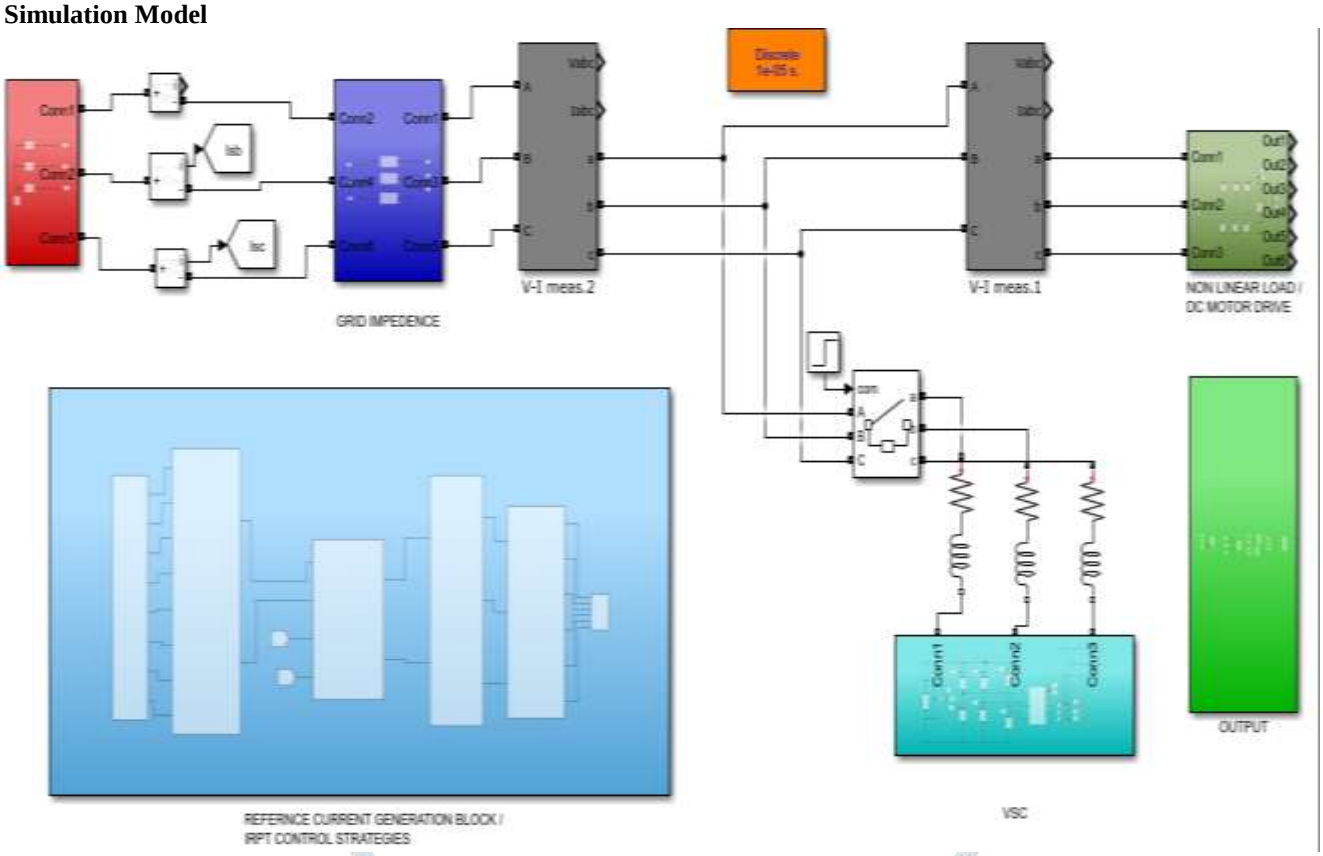

Figure4. Simulation matlab modeling of SAPF.

5.2 OUTPUT WAVEFORM

Figure 5 shows the waveform of source Current when SAPF cannot be connected in the circuit for filtering the harmonic current components which can be generated due to nonlinear load. From the figure 5 it is clear that the current harmonic can be generated by the connected nonlinear load and Fig 6 shows the FFT waveform of source Current. From the below figure it is clear that the current harmonic can be generated by the connected nonlinear load i.e. 30.32%.

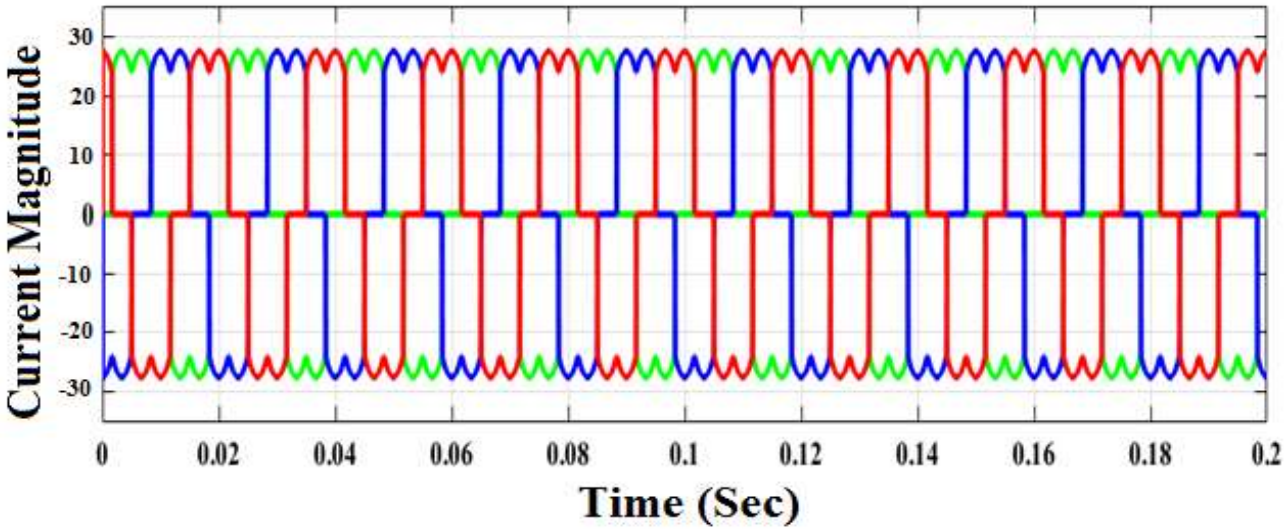

Figure5. Waveform of Three phases source current waveform without filter.

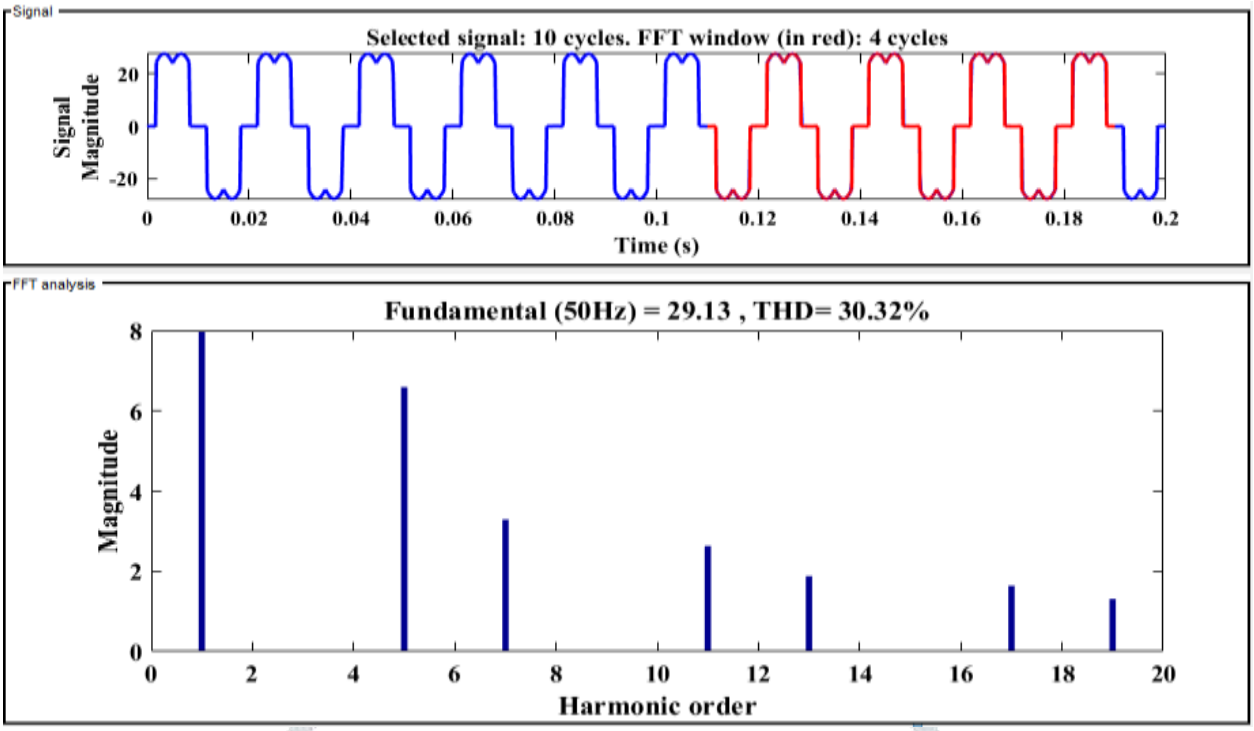

Figure6. FFT Waveform of Three phase source current waveform without filter.

Figure 7 shows the waveform of source Current with conventional PI Controller connected in the circuit for filtering the harmonic current components which can be generated due to nonlinear load and Fig 8 shows the FFT waveform of source Current with conventional PI Controller. From the figure 8 it is clear that the current harmonic can be reduced from 30.32% to 14.54% by the help of Conventional PI Controller.

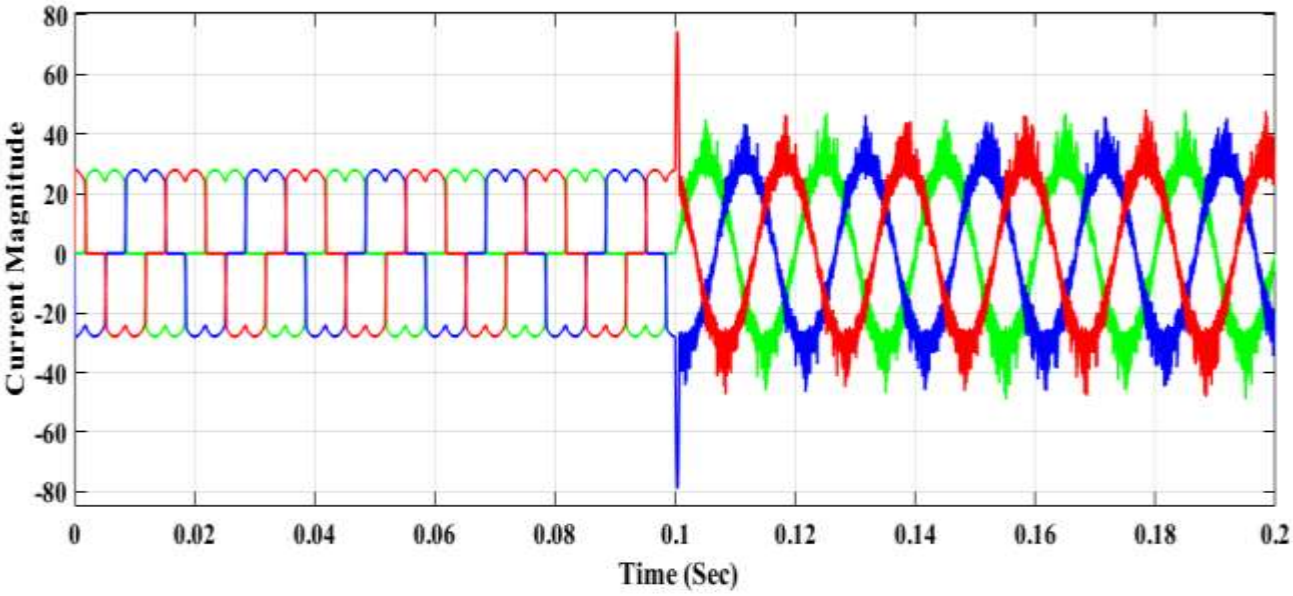

Figure7. Waveform of Three phase source Current with Conventional PI Controller.

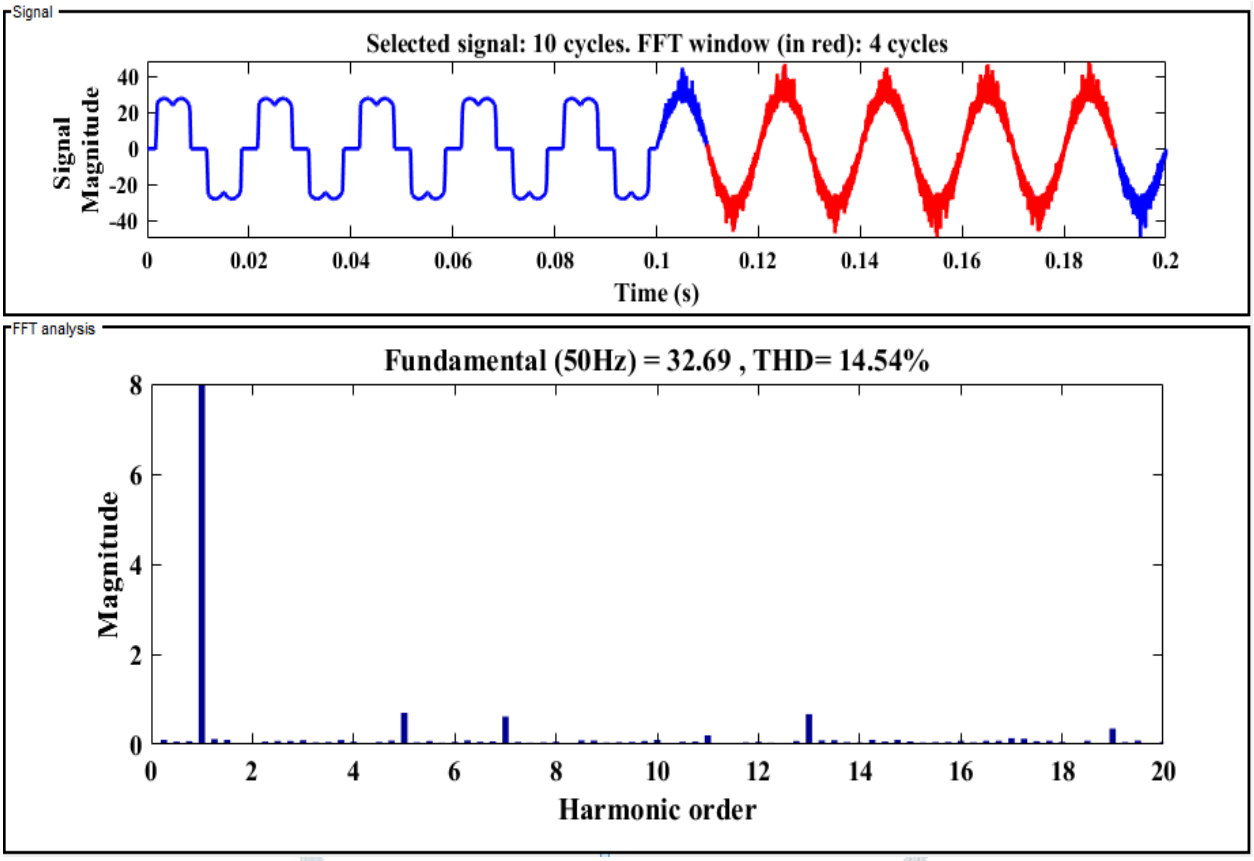

Figure8. Waveform of Three phase source Current with Conventional PI Controller.

Figure 9 shows the waveform of source Current with Optimized Grey Wolf Optimization Based optimized PI Controller connected in the circuit for filtering the harmonic current components which can be generated due to nonlinear load and Figure 10 shows the corresponding FFT waveform of source Current with Optimized Grey Wolf Optimization Based optimized PI Controller. From the figure 10 it is clear that the current harmonic can be reduced from 14.54% to 5.34% by the help of Grey Wolf Optimization Based optimized PI Controller.

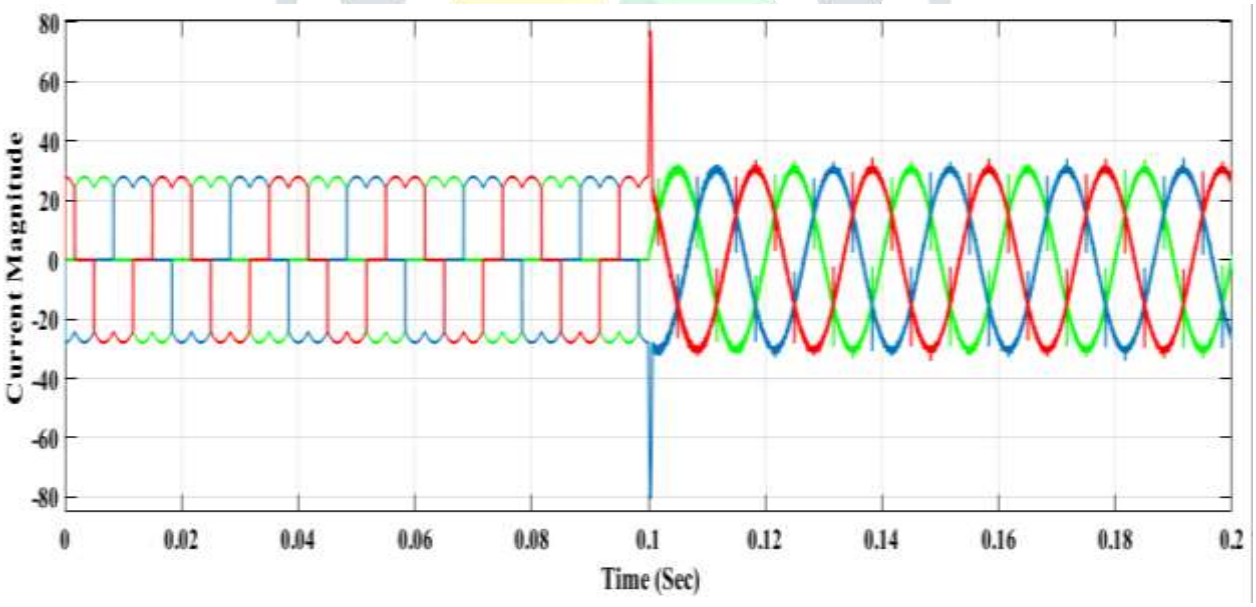

Figure9. Three-phase source current waveform with optimized PI Controller (GWO).

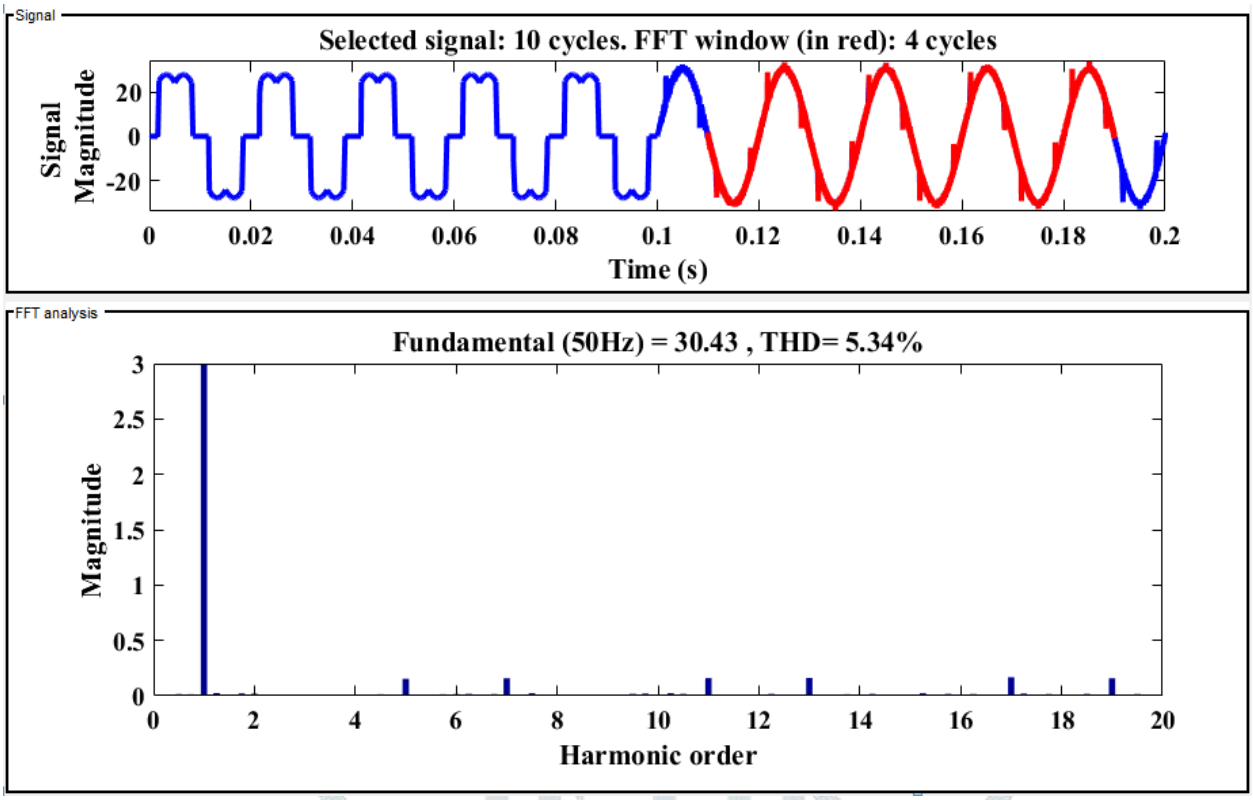

Figure10. FFT analysis of three phase source current waveform with optimized PI Controller (GWO).

Figure 11 shows the waveform of source Current with Optimized Cuckoo Search Algorithm Based optimized PI Controller connected in the circuit for filtering the harmonic current components which can be generated due to nonlinear load and Figure 12 shows the corresponding FFT waveform of source Current with Optimized Grey Wolf Optimization Based optimized PI Controller. From the figure 12 it is clear that the current harmonic can be reduced from 5.34% to 4.50% by the help of Cuckoo Search Algorithm Based optimized PI Controller.

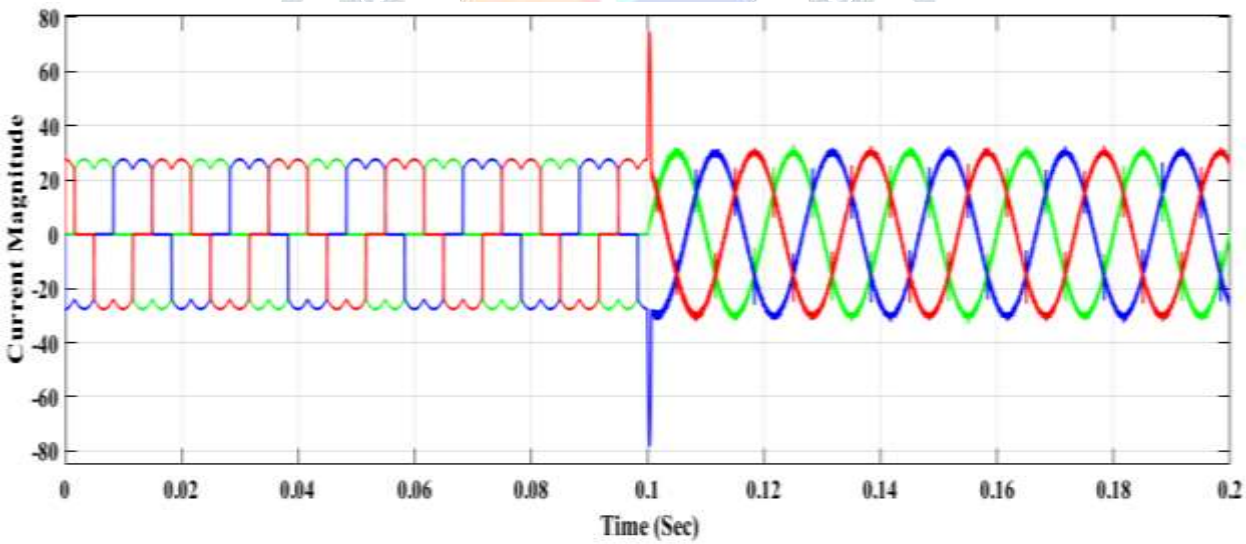

Figure11. Three-phase source current waveform with optimized PI Controller (CSA).

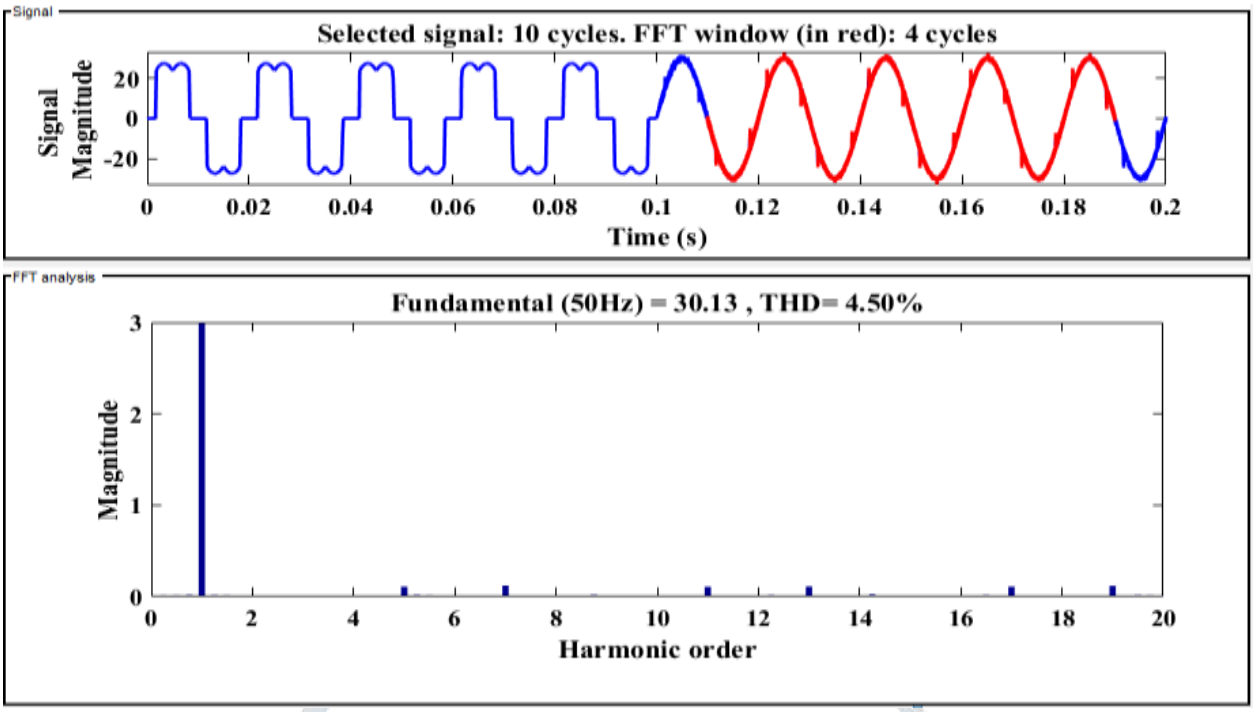

Figure12. FFT analysis of three phase source current waveform with optimized PI Controller (CSA).

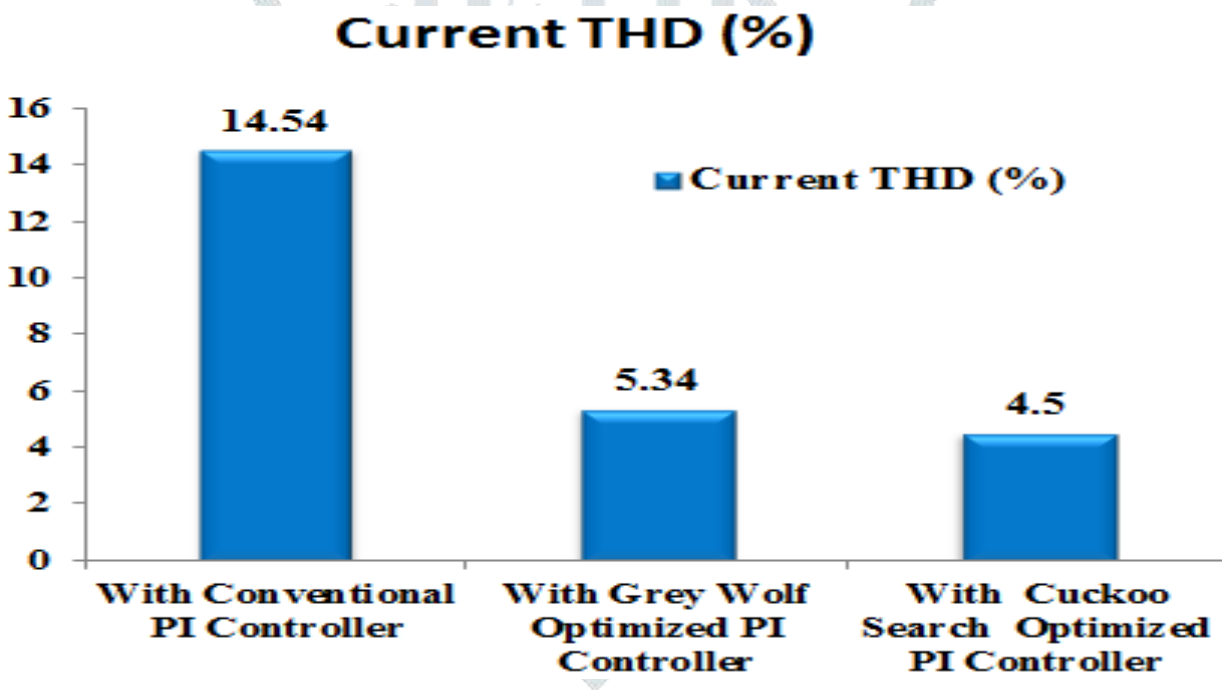

Figure13. Comparison analysis of THD current.

From Figure 13 it is clear that the THD of source current can be significantly reduced by the help of Cuckoo Search Algorithm as compared to the conventional PI Controller and Grey Wolf Optimization Techniques. Table 1 and Table 2 shows the corresponding parameter value which is considered about the whole simulation running time period.

Table 1:- Grey Wolf Optimization Parameter

GSA Parameter	P	I	Kp	K_i
Optimization Values	51.29	39.85	82.34	91.35
CURRENT THD (%)	5.34%			

Table 2:- Cuckoo Search Algorithm Parameter

GSA Parameter	P	I	Kp	K_i
Optimization Values	55.15	54.25	87.15	73.25
CURRENT THD (%)	4.50%			

VI. CONCLUSION AND FUTURE WORK

The power quality issue generated by altered charges in electrical power systems has been profoundly changing crucial manufacturing processes. The power quality problems generated by load distortion in electrical equipment have increasingly disrupted vital operational processes. Active filter are mandated to tackle these issues on the utility and charge parties. SAPF strategies offer decent alternative approaches for reactive power impairments including faster reactions. In this research work, VSC converter is being used to administer reactive power to the PCC on the line. The overall harmonic distortion before compensation was 30.32% and after compensation is 4.50%. The following research gaps have been recognized for potential works based on the investigation performed.

- Implement of the system in the grid faults and analyze the performance.
- The approach proposed is implemented in three phase three wire system which can be flourished further into 3 phase 4 wire system.
- Apply some other new optimization technique.

REFERENCES

[1] A. P. Vishwakarma and K. Milan Singh, "Comparative Analysis of Adaptive PI Controller for Current Harmonic Mitigation," 2020 International Conference on Computational Performance Evaluation (ComPE), Shillong, India, 2020, pp. 643-648.

[2] B. Singh, Kamal Al-Haddad, "A Review of Active Filters for Power Quality Improvement", IEEE Transactions On Industrial Electronics, VOL. 46, NO. 5, October 1999.

[3] B. Singh and J. Solanki, "A Comparative Study of Control Algorithms for DSTATCOM for Load Compensation," *2006 IEEE International Conference on Industrial Technology*, Mumbai, 2006, pp. 1492-1497.

[4] Bhim Singh,Jitendra Solanki "A Comparison of Control Algorithms for DSTATCOM" IEEE Transactions On Industrial Electronics, Vol. 56, No. 7, July 2009.

[5] D. Nair, M. Raveendran, A. Nambiar, N. P. Mohan and S. Sampath, "Mitigation of power quality issues using DSTATCOM," *2012 International Conference on Emerging Trends in Electrical Engineering and Energy Management (ICETEEEM)*, Chennai, 2012, pp. 65-69.

[6] V. M. Awasth and V. A. Huchche, "Reactive power compensation using D-STATCOM," *2016 International Conference on Energy Efficient Technologies for Sustainability (ICEETS)*, Nagercoil, 2016, pp. 583-585.

[7] A. Sode-Yome, N. Mithulananthan and K. Y. Lee, "A Comprehensive Comparison of FACTS Devices for Enhancing Static Voltage Stability," *2007 IEEE Power Engineering Society General Meeting*, Tampa, FL, 2007, pp. 1-8.

[8] Mohammed Barghi Latran, Ahmet Teke, Yeliz Yoldaş "Mitigation of power quality problems using distribution static synchronous compensator a comprehensive review" ISSN 1755-4535,2015.

[9] Ambrish Chandra Bhim Singh, B. N. Singh,and Kamal Al-Haddad, "An Improved Control Algorithm of Shunt Active Filter for Voltage Regulation, Harmonic Elimination, Power-Factor Correction, and Balancing of Nonlinear Loads", IEEE TRANSACTIONS ON POWER ELECTRONICS, VOL. 15, NO. 3, MAY 2000.

[10] Anant Naik, Udaykumar Yaragatti "Comparison of Three Popular Control Strategies Used in Shunt Active Power Filters" Asia Pacific Conference on Postgraduate Research in Microelectronics & Electronics (PRIMEASIA) 2012.

[11] Gunjan Varshney, D.S. Chauhan ,M.P. Dave "Performance Analysis of Photovoltaic based DSTATCOM using SRF and IRP Control Theory" 2015 1st International Conference on Next Generation Computing Technologies (NGCT-2015) Dehradun, India, 4-5 September 2015.

[12] P. Rao, M. L. Crow and Z. Yang, "STATCOM control for power system voltage control applications," in *IEEE Transactions on Power Delivery*, vol. 15, no. 4, pp. 1311-1317,Oct.2000.

[13] Y. Xu and F. Li, "Adaptive PI control of STATCOM for voltage regulation," *2014 IEEE PES General Meeting | Conference & Exposition*, National Harbor, MD, 2014.