Modeling and Analysis of Human Femur Bone with Alternate Material

[1]Rishikesh Gaikwad, [2]S. M. Arali,

[1]Student, [2]Assistant Professor,
[1] Mechanical Engineering Department,
[1] Walchand College of Engineering, Sangli, 416415, India.

Abstract : The primary aim for this study is to conduct biomechanical analysis of human femur bone using different biomaterials and for various activities**.** Using various tools the modeling of femur bone is carried out within the dimensions. For different activities using the respective boundary conditions and respective material properties of the biomaterials the analysis is done using ANSYS software. Both stress and deformation are calculated using ANSYS. For justifying the results, computational analysis is done for deformation criteria. The analytical and computational results are correlated and basis of graphical representation, both results are justified.

***Keywords* – Biomechanical, analysis, human femur, biomaterials.**

I. INTRODUCTION

Biomechanics involves the application of mechanical principles in the field of medical science. Mainly the mechanical principles are applied related to the bone as it is an important part in the body. Femur bone is the part of the body which is essential body part which carries the human body weight and provides the support to human body. The femur bone is connected to hip joint and knee joint. At various conditions various type of load act on this bone hence considered as important part and the main focus goes towards this part. The head of Femur bone have very complicated structure and it is mainly affected by the load acting on the femur bone. Finite Element Method (FEM) is widely accepted as a power tool for biomechanics modeling. FE model would be advantageous in complementing experimental works.

The replacement or the repair of the femur bone or the joint of the bone is a complicated process but it is essential. Various materials are available for the bone replacement. Materials to be used for the replacement need to be biocompatible i.e. it should not harm the human body. The material used for replacement needs to work similar to the bone. The load/force acting on the femur is available based on many studies carried out previously. Using the data, analysis is carried out and the failure of the bone can be predicted. Mostly the failure occurs at hip joint in normal falling situation.

Various materials are available which are biocompatible and having similar material properties to the actual bone. FE analysis of these materials is also required so that the most suitable material can be selected for the replacement of the femur bone.

II. MODELING OF HUMAN FEMUR BONE

the morphometric study 91 femurs of both sexes were used. This study was carried out in Department of Anatomy of Lady Hardinge Medical College, New Delhi in the span of 1 year from January 2015 to January 2016. Visible disabilities like tumors, deformities, fractures are neglected during the study. Also these readings are crosschecked by another method in which all the bones were photographed anteroposteriorly (along the axis) by digital camera. Femur was placed in a position parallel to surface of table by rotating femoral shaft [8].

Different dimensions are measured using both techniques and results are approximately similar. Statistical analysis is performed and values of all dimensions of all readings are calculated. These dimensions are referred for preparation of CAD model. Using UNIGRAPHICS NX software the CAD model is prepared. The model is not exact but it is close to the dimensions obtained [8]. From the literature [8] the bone dimensions are justified.

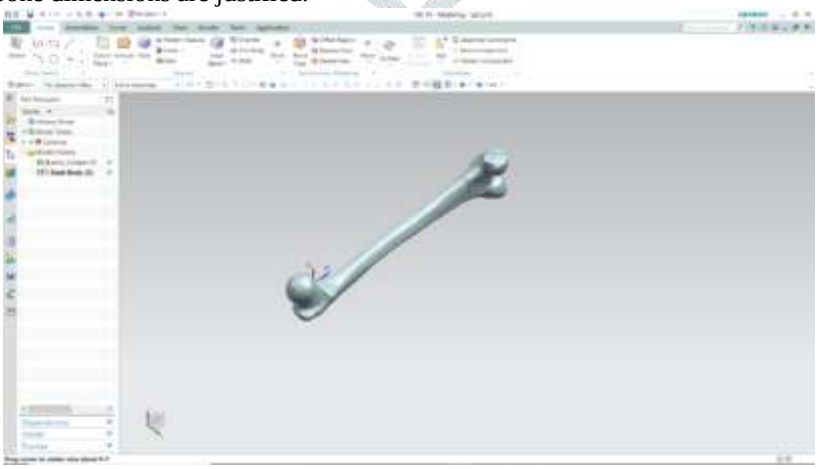

Figure 1. CAD model of human femur bone

III. BIOCOMPATIBLE MATERIALS

Bone replacement, especially hip joint replacement is increasing recently. Various materials are present which can be replaced these are called biocompatible. Biomaterials are synthetic materials which are generally used to replace a body part or function of body part in safe and reliable manner. Biomaterials are used in human body hence they need to be inert and mechanically strong enough to bear the load.

Various applications of biomaterials are listed below,

1. Replacement of damaged or diseased part
2. Improvement in functionality
3. Remove abnormality
4. Assist in healing
5. Aid to diagnosis

Biomaterials are expected to work satisfactorily in body environment. During daily activities the femur bone is subjected to variable load according to the activity being performed. [6] The biomaterials are classified in 3 categories metallic, ceramic and polymers.

3.1 Metallic

In 20th century stainless steel and cobalt-chrome based alloys were used in orthopaedic applications. Stainless steel material allows self-healing, corrosion resistance properties because of high Cr content (more than 12%). Despite these properties the use of stainless steel was reduced due to some limitations. Wear resistance of austenitic stainless steel is relatively weak. Also the modulus of stainless steel is about 200GPa which is much higher than that of bone.

Cobalt based alloys is high corrosion resistant due to formation of oxide layer within human body environment. They have superior mechanical properties such as high resistance to fatigue and cracking caused by corrosion with excellent wear resistance.

Titanium based alloys are also popular in hip replacement. It is because of its characteristic like low density, high specific strength, good corrosion resistance and complete inertness along with biocompatibility. Moderate elastic modulus approximately 110 GPa which is half of that of stainless steel or cobalt based alloys.

3.2 Ceramic

In 18th century, the controlled implantation of bio-ceramic materials started in dental with the use of POP, or gypsum for bone filling. Ceramic bearings were first introduced as alternatives to polyethylene (PE) in THR after some years as Sir John Charnley introduced the first durable THR with a metal-PE articulation. Best application of bio-ceramic was replacing traditional metallic femoral heads of hip using high density and pure alumina. Alumina is commonly used ceramic for THR because of its low friction and wear coefficient, makes its suitable alternative for the orthopaedic bearing.

3.3 Polymers

Polymer materials are mostly used for various applications because of their advantages like low cost, wide range of mechanical and physical properties. Polymers can be divided into two categories as Bio-stable and Biodegradable according to their durability in biological environments.

Examples of bio-stable polymers are polyethylene (PE), poly-methylmethacrylate (PMMA) and poly-etheretherketone (PEEK) which are used in hip and dental implants. Examples of bio-degradable polymers are poly-e-caprolactone (PCL), poly-glycolic acid (PGA), Poly-lactic acid (PLA) and poly latic-co-glycolic acid (PLGA) which breakdown gradually in the physiological environment of body into biocompatible products.

All material properties are referred from [6].

IV. Boundary Conditions and Meshing

Femur is very important part of human body as it almost carries entire load of human body. During the activities like running, vertical jumping the application of load increases and can damage the femur. Recently many researchers carried biomechanical studies for quantifying the forces experienced by lower limbs during above mentioned activities. The results obtained are essential for FE analysis of the femur bone during performance of these activities.

4.1 Standing Still

Load acting on femur during standing position is simple to calculate. Only body weight is acting on the femur. Load on one femur is calculated as,

Force acting on hip = 0.5*9.81* BW

4.2 Running

For obtaining the results sample of 10 men were recruited. All anthropometric measurements were taken before carrying out the tests. The contact forces were instantaneous, compressive and large compared to other component. The result obtained is as follows [9],

Peak axial Force on Hip = (11.89±2.19)* BW

During application of load in FE analysis the lower end is considered as fix end [9].

4.3 Vertical Jumping

The forces acting during this activity are measured by using similar process as running activity. Load acting is compressive and instantaneous. The other end is considered as fixed [10].

Axial force on hip = (5.6-8.4)*BW

The load is applied on hip joint, while tibiofemoral end is fixed. Loading end and fixed ends are shown in fig 2.

Meshing is performed using auto-mesh. Refinement is done for fine meshing at both ends of femur bone i.e. hip joint and tibiofemoral joint as both ends comes under application of boundary conditions. It is shown in fig 3. Number of tetrahedral elements used for femur model are 71879 and nodes are 118351.

Figure 2. Boundary Conditions

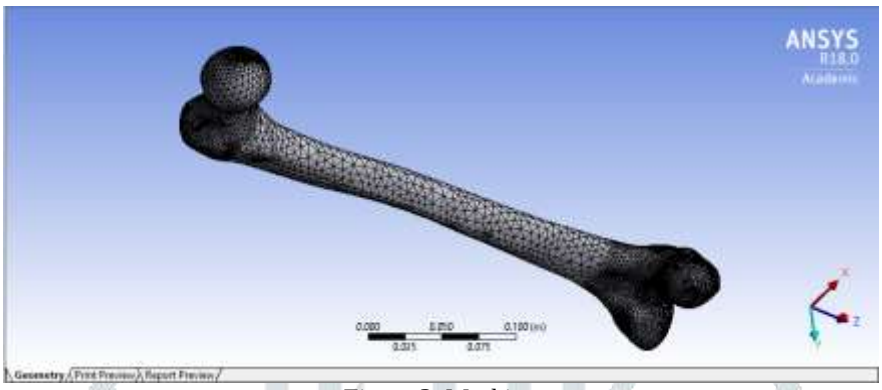

Figure 3. Meshing

V. ANALYSIS

Analysis for all materials and every activity is carried out. Deformation and von mises stress are determined in analysis. The sample of standing activity and co-cr alloy is shown in fig 4 and 5.

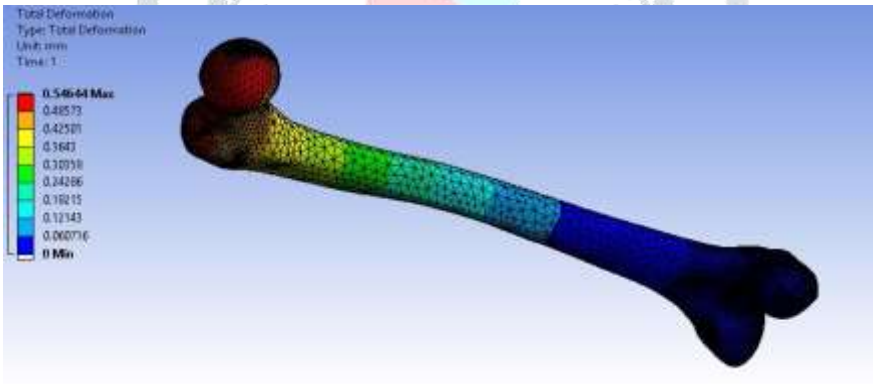

Figure 4. Total deformation

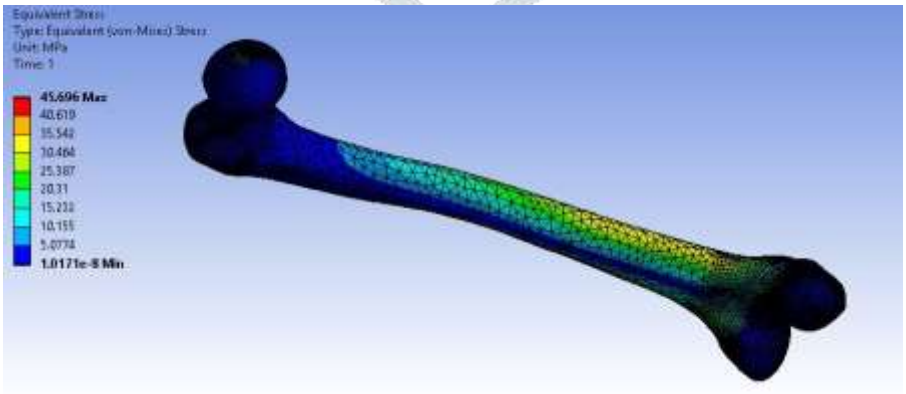

Figure 5. Von mises stress

Total deformation –x direction is 0.54 mm
Maximum von Mises stress is 45.62 MPa
All other results are shown in table 1

Table 1. Results of analyses for bio-materials

Materials	Activity	Total Deformation (mm)	Von Mises Stress (MPa)
Titanium	Standing	1.04	45.51
	Running	2.50	109.22
	Jumping	1.45	63.71
Co-Cr Alloy	Standing	0.55	45.69
	Running	1.31	109.67
	Jumping	0.76	63.97
Al_2O_3	Standing	0.25	45.92
	Running	0.61	110.21
	Jumping	0.35	64.28
Si_2N_4	Standing	0.38	46.112
	Running	0.91	110.67
	Jumping	0.53	64.56
PLA	Standing	28.63	45.91
	Running	68.71	110.18
	Jumping	46.08	64.27
Polyether ketone	Standing	31.79	46.03
	Running	76.29	110.48
	Jumping	44.50	64.45

VI. Computational Analysis

The validation of analytical results is based on the deformation factor. To perform the computational analysis, many considerations regarding geometry of femur bone needs to be taken. As the bone poses irregular shape hence the uniform shape is considered while calculating deformation (as shown in fig 6). Here a sample calculation for standing activity with co-cr alloy material is given,

STANDING ACTIVITY
E = 541 GPa
G = 83 GPa

Resolving the force
$F_x = 350 \cos(35) = 286.72$ N
$F_y = 350 \sin(35) = 200.75$ N
Consider ΔOCB,
OB = 44 cos(35) = 36.04 mm
OC = 44 sin(35) = 25.23 mm
Distance from O to centre of column AB = 36.04+15= 51.04 mm
Twisting moment on AB due to F_y,

$$T = F_y * 51.04 = 200.75 * 51.04 = 1.02*10^4 \text{ N-mm}$$

Bending moment on AB due to F_x,

$$M = F_x * 25.23 = 286.72 * 25.23 = 0.72*10^4 \text{ N-mm}$$

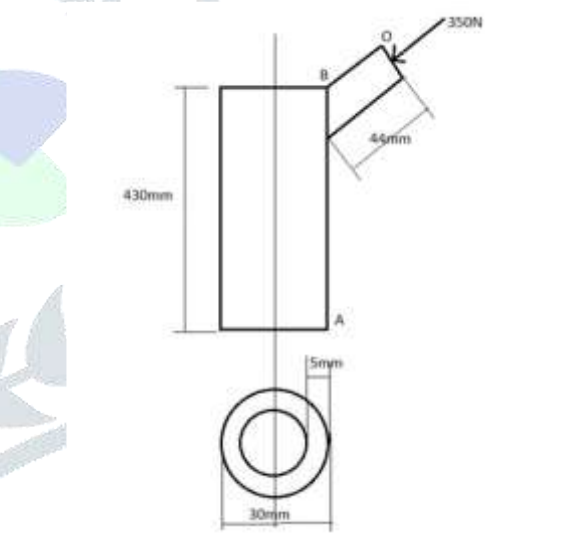

Figure 6. Schematic diagram for loading condition

Titanium Material
DEFLECTION DUE TO BENDING MOMENT

$$Y_m = \frac{ML^2}{8EI} = \frac{0.72*10^4*430^2}{8*541*10^3*\frac{\pi}{64}*(30^4-20^4)} = 0.01 \text{ mm}$$

DEFLECTION DUE TO TWISTING
Strain energy due to twisting

$$U_T = \frac{T^2L}{2JG}$$

Deflection is given as,

$$Y_T = \frac{dU}{dW}$$ where, W is load (here it is twisting)

$$Y_T = \frac{d}{dW}\left(\frac{T^2L}{2JG}\right) = \frac{2TL}{2JG} = \frac{TL}{JG}$$

$$= \frac{1.02*10^4*430}{\frac{\pi}{32}*(30^4-20^4)*83*10^3}$$

$$= 8.28 * 10^{-4} \text{ mm}$$

DEFLECTION DUE TO f_x

$$Y_{fx} = \frac{WL^3}{3EI}$$

$$= \frac{286.72*430^3}{3*541*10^3*\frac{\pi}{64}*(30^4-20^4)}$$

$$= 0.5 \text{ mm}$$

TOTAL DEFLECTION

$$Y = 0.01 + 8.28 * 10^{-4} + 0.5$$

$$= 0.51 \text{ mm}$$

Total deflection in analytical results is 0.55. Percentage relation between analytical and computational is 107.84%. All other results correlation is shown in fig 7.

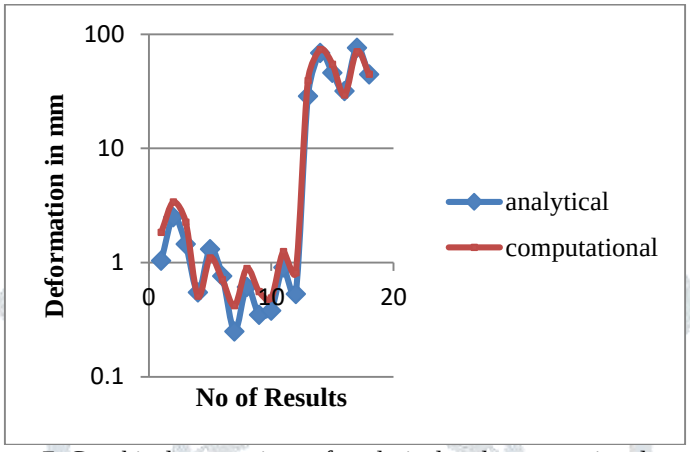

Figure 7. Graphical comparison of analytical and computational results

VII. Conclusion and Future Scope

Different analyses are carried out using various material properties for different activities on human femur bone. Based on the results obtained from the analyses suitable materials can be selected as a substitute for bone material. On the basis of computational results, the analytical results from FE analysis can be considered as accurate. Metallic and ceramic bio-materials can be preferred over polymer materials as they have shown comparatively less values of deformation and based on these criteria best suitable materials are selected.

The future scope for this study plays vital role here. Firstly the validation method used needs to be optimized i.e reducing the considerations will reduce the differences between analytical and computational results. Also while analysis for actual bone material, properties are considered as orthotropic. Actual bone material is functionally graded so there is scope of carrying out the analysis using actual bone material properties.

VIII. References

1. Nithin Kumar KC, Tushar Tandon, Praveen Silori and Amir Shaikh, “Biomechanical stress analysis of a Human Femur bone using ANSYS”, 4th International Conference on Materials Processing and Characterization.
2. Somkid Amornsamankul, Kamonchat Kaorapapong and Benchawan Wiwatanapataphee, “Three-Dimensional Simulation of Femur Bone and Implant in Femoral Canal using Finite Element Method”, International Journal of Mathematics and Computers in Simulation.
3. Muhammad Shahzad Masood, Atique Ahmad and Rizwan Alim Mufti, “Unconventional Modeling and Stress Analysis of Femur Bone under Different Boundary Condition”, International Journal of Scientific & Engineering Research, Volume 4, Issue 12, December-2013 293 ISSN 2229-5518.
4. Prof. Dr. Albert E. Yousif and Mustafa Y. Aziz “Biomechanical Analysis of the human femur bone during going upstairs and sitting down”, The First National Conference for Engineering Sciences FNCES'12 / November 7 - 8, 2012.
5. Raji Nareliya and Veerendra Kumar, “Finite Element Application to Femur Bone: A Review”, Journal of Biomedical and Bioengineering ISSN: 0976-8084 & E- ISSN: 0976-8092, Volume 3, Issue 1, 2012, pp.-57-62.
6. Sachin G. Ghalme, Ankush Mankar and Yogesh Bhalerao “Biomaterials in Hip Joint Replacement”, International Journal of Material Science and Engineering.
7. S S Das and P Chakraborti “Development of Biomaterials for Total Hip Joint Replacement”, International Conference on Mechanical, Materials and Renewable Energy IOP Publishing IOP Conf. Series: Materials Science and Engineering 377 (2018) 012177 doi:10.1088/1757-899X/377/1/012177.
8. Minakshi Verma, Sheetal Joshi, Anita Tuli, Shashi Raheja, Priyanka Jain and Priyanka Srivastva, “Morphometry of Proximal Femur in Indian Population”, Journal of Clinical and Diagnostic Research. 2017 Feb, Vol-11(2): AC01-AC04.
9. Edwards, William Brent, "Internal structural loading of the lower extremity during running: Implications for skeletal injury" (2009).Graduate Theses and Dissertations. 10656.
10. Daniel J Cleather, Jon E Goodwin and Anthony MJ Bull, “Hip and Knee Joint Loading During Vertical Jumping and Push Jerking”, Clin Biomech (Bristol, Avon), 2013 January.

11. E. M. M. Fonseca, M. J. Lima and L. M. S. Barreira "Human Femur Assessment Using Isotropic And Orthotropic Materials Dependent Of Bone Density", 3rd International Conference on Integrity, Reliability and Failure, Porto/Portugal, 20- 24 July 2009.
12. Theodore G. Torldist "Stress Analysis of the Femur", Biomechlmics. Vol. 2. pp. 163-174. Pergamon Press. 1969.