"A NUMERICAL INVESTIGATION OF THERMODYNAMIC PERFORMANCE OF CASCADE REFRIGERATION SYSTEM OPERATED BY DIFFERENT REFRIGERANT PAIRS"

[1]Alok Ahirwal, [2]Rakesh Mangore, [3]Prachi Kenhekar

[1]M.Tech Scholar, [2]Asst. Prof., [3] Asst. Prof.

[1]Department of Mechanical Engineering

[1]Samrat Ashok Technological Institute (SATI), Vidisha, India

ABSTRACT

Due to increasing , global pollution in terms of air, water & soil, scientific community concentrating on development of new alternative refrigerants which are safe for nature & eco friendly. Many researchers of around the world have made part of accomplishments in the substitution of refrigerants, looking for the refrigerant option in low temperature circuit and high temperature circuit of cascade system with zero ODP & low GWP value. That is the reason I consider refrigerants in my research work with zero ozone depletion potential and low global warming potential. Natural refrigerants should be preferred for selecting refrigerants in cascade refrigeration system due to its environment friendly nature. Successful design of cascade vapour refrigeration system mainly depends upon the selection of refrigerants for both temperature circuits: high temperature circuit &low temperature circuit. The goal of my research work is to analyze two distinctive cascade vapour refrigeration system utilizing two refrigerant sets R41/R290 and R41/R600. Performances of cascade vapour refrigeration system using R41/R290 refrigerant pair & R41/R600 refrigerant pair are analyzed thermodynamically. A mathematical model used for this purpose.EES (ENGINEERING EQUATION SOLVER) software is used for mathematical modeling. Performances of cascade vapour refrigeration system in terms of COP, X_{TOTAL}, W_{TOTAL} & η_{Ex} analyzed under various operating conditions like T_{EVA}, T_{CON} & T_{CASLTC} .Result shows that the Coefficient of performance (COP) of refrigerant pair R41/R600 used in cascade vapour refrigeration system is higher compared to R41/R290 refrigerant pair operated at same working conditions.

KEYWORDS: COP, Natural Refrigerants, Engineering Equation Solver, Mass Equilibrium

1. GENERAL

In our day to day life, we can't imagine without refrigeration & air conditioning. Refrigeration & air conditioning make our daily live more easily. It plays an important role in each sector of our daily life like to keep fresh vegetables, dairy products, eggs, preservation of food items, formation of ice & ice cream, room air conditioning etc. It has also important role in medical applications & industrial applications. Medical applications include blood storage, drugs and vaccine storage, preservation of organs for transplant & blood tissues etc. These days due to COVID19 global pandemic, preservation of vaccines at very low temperature required which is only possible by refrigeration system. Industrial applications of refrigeration & air conditioning are very vast. It's not only including product industry but also process industry. Power plants, pharmaceuticals companies, chemical industries are few examples.

2. CASCADE VAPOUR REFRIGERATION SYSTEM

A cascade vapour refrigeration system having two circuits one is HTC & another is LTC. HTC stands for high temperature circuit & LTC stands for low temperature circuit. Both circuits are operated with different temperatures & different refrigerants. A heat exchanger connects the LTC & HTC side of cascade vapour refrigeration system**.** Two heat exchangers are used to connect LTC,

MTC & HTC side of three stage cascade vapour refrigeration system. MTC stands for middle temperature circuit. LTC operates at low evaporating temperature and produce refrigerating effect & HTC operates at high evaporating temperature. In two stage cascade vapour refrigeration system, a heat exchanger employed as a cascade condenser. This cascade condenser works as an evaporator for HTC & as a condenser for LTC. High temperature circuit wields refrigerants with higher boiling point & higher critical point and low temperature circuit wields refrigerants with lower boiling point. Two or more than two VCRS create the **cascade vapour refrigeration system.**

3. SELECTION CRITERIA FOR REFRIGERANTS IN CASCADE REFRIGERATION SYSTEM

Successful design of cascade vapour refrigeration system mainly depends upon the selection of refrigerants for both temperature circuits: high temperature circuit &low temperature circuit. Following points should be considered for selecting the refrigerants in Cascade Refrigeration System:

1.Due to increasing , global pollution in terms of air, water & soil, scientific community concentrating on development of new alternative refrigerants which are safe for nature & eco friendly. These refrigerants having very low GWP (Global Warming Potential) & zero ODP (Ozone Depletion Potential) [3]. Due to **KYOTO PROTOCOL, MONTREAL PROTOCOL** & **KIGALI AMENDEMENT** reduction & phase out of refrigerants which are harmful for nature and reduce the emissions of green house gases. This will help in protecting the environment [5]. Select the refrigerant pairs for cascade system with very low GWP & zero ODP and environment protected.

2. Natural refrigerants should be preferred for selecting refrigerants in cascade refrigeration system due to its environment friendly nature.

3.Boiling point ,critical point & freezing point are main properties of refrigerants which may be consider for selecting appropriate refrigerants for cascade system. Low temperature circuit refrigerant should have low boiling point & low freezing point. Freezing point of refrigerant should be less than the temperature to be attained. High temperature circuit refrigerant should have high boiling temperature compared to low temperature circuit. Critical pressure & temperature of refrigerant should be high. Boiling point is directly proportional to cooling required. It should be low as possible.

4. REVIEW OF PAST STUDIES:

BARIS YILMAZ Et al. (2020) [1] compared natural and synthetic refrigerants used in cascade refrigeration system at very low temperature applications. Natural refrigerants used in this studied are R1270 –R170 & synthetic refrigerants used are R404 (A)-R508 (B). He compared both refrigerant pairs in terms of their COP, environmental aspects & for finding out which one is better.

YIJIAN HE Et al. (2020) [2] developed a cascade system which makes use of 45-60^{0}C heat. He designs a two stage cascade compression absorption system. In compression, R1234yf and R1234ze (E) refrigerants are selected & in absorption, LiBr/H_2O refrigerant pair is selected.

VICTOR ADEBAYO Et al. (2020) [3] compared four different refrigerant pairs for cascade system in respect of its COP, exergetic efficiency, TEWI values. Four different refrigerant pair combinations are NH_3-CO_2, R134A-CO_2, HFE7000-CO_2 and HFE7100-CO_2 .

SHYAM AGARWAL Et al. (2020) [4] analyzed the cascade compression absorption three stage system. In absorption, LiBr–h_2o is selected and in compression, R1234yf is selected. Engineering equation solver software is used for thermodynamic analysis.

YOUSUF ALHENDAL Et al. (2020) [5] studied used for find out the best alternative refrigerant for automobile A.C. System which one is eco friendly. This study help us to find out alternative of R134A.Three potential substitutes of R134A are R152A,R1234YF and R1234ze(E).

5. NUMERICAL MODEL

This part manages the numerical modeling of two areas:

1. CASCADE VAPOUR REFRIGERATION SYSTEM (R41/R290 REFRIGERANT PAIR)

2. CASCADE VAPOUR REFRIGERATION SYSTEM (R41/R600 REFRIGERANT PAIR)

Cascade vapour refrigeration system is a combination of two vapour compression refrigeration systems (VCRS). A heat exchanger connects both VCRS. In LTC (Low Temperature Circuit), R41 refrigerant utilized due to its low NBP. This refrigerant generates desired cooling effect in proposed cascade system. In HTC (High Temperature Circuit), R290 refrigerant utilized which is used for condensing the R41 of LTC.

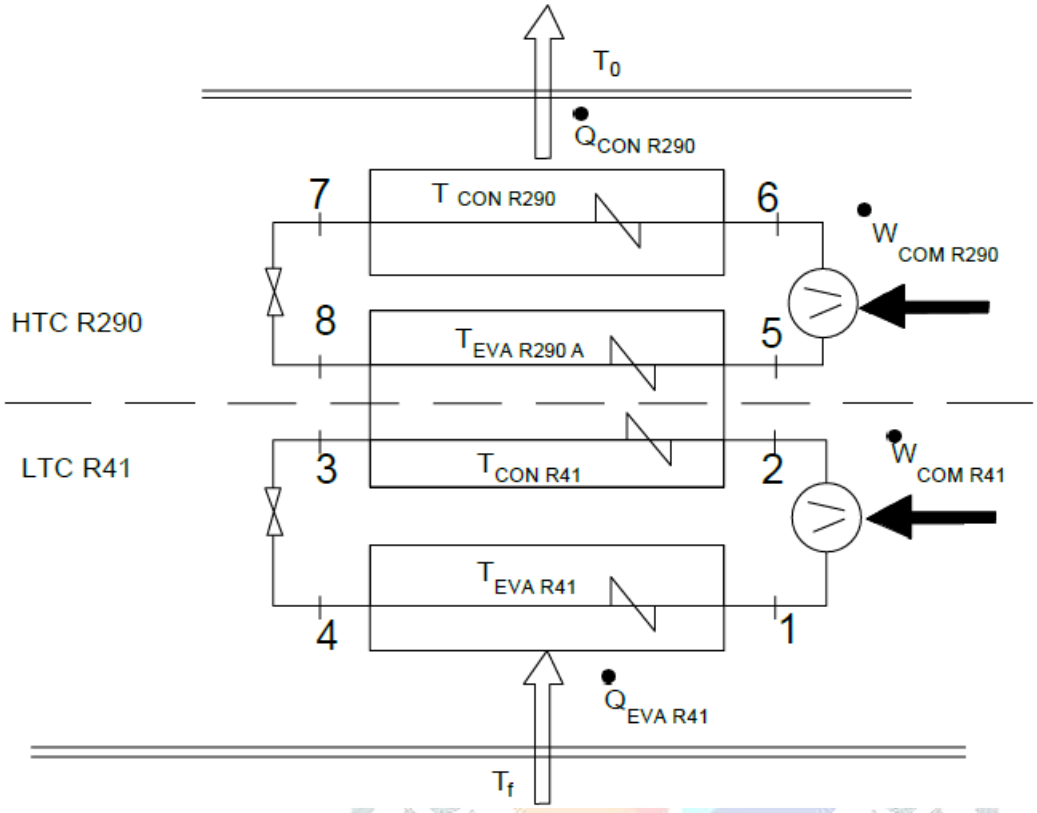

FIG.1 LINE DIAGRAM OF CASCADE VAPOUR REFRIGERATION SYSTEM (R41/R290 REFRIGERANT PAIR)

5.1.1. RESEARCH ASSUMPTIONS FOR CASCADE VAPOUR REFRIGERATION SYSTEM (R41/R290 REFRIGERANT PAIR):

(1). All segments are thought to be a steady state steady flow measures. The adjustments in the potential and the kinetic energy of the parts are not considered due to minor.

(2). Refrigerant used in cascade system assumes to be a saturated state at outlet of evaporator, condenser & heat exchanger.

(3). Compressor used in LTC of cascade system having isentropic compression. Isentropic efficiency of Compressor is 0.6.

(4). Expansion devices used in cascade system isenthalpic.

(5). It is assumed that no heat added or rejected in framework parts of the system. Also pressure is assumed insignificant in system.

(6). Equilibrium state temperature & pressure are $t_O = 26^0C$ & $p_O = 1.01325$ bar.

(7). Temperature difference for cascade condenser is 4^0C.

5.1.2. MASS EQUILIBRIUM & ENERGY EQUILIBRIUM:

Following relation is used for finding out the COP of refrigeration system:

$$COP = Q_L/Wr$$

Where Q_L=Heat extract from cold body, Wr= Total work required on the refrigeration system

TABLE 1: MASS & ENERGY EQUILIBRIUM EQUATIONS FOR R23/R290 CASCADE REFRIGERATION SYSTEM

ELEMENT	MASS EQUILIBRIUM	ENERGY EQUILIBRIUM
LTC Compressor	$M_2=M_1$	$W_{com}R41=M_1*(h_{2s}-h_1)$
HTC Compressor	$M_6=M_5$	$W_{com}R290=M_5*(h_{6s}-h_5)$
LTC throttling. Device	$M_4=M_3$	$h_4=h_3$
HTC throttling Device	$M_8=M_7$	$h_8=h_7$
LTC Evaporator	$M_1=M_4$	$Q_{eva}R41=M_1*(h_1-h_4)$
HTC Condenser	$M_7=M_6$	$Q_{con}R290= M_5*(h_7-h_6)$
C.H.E	$M_3=M_2, M_5=M_8$	$M_1*(h_3-h_2)=M_5*(h_5-h_8)$

6. NUMERIC EXPRESSION

(a). COP of low temperature circuit cascade vapour refrigeration system is given by:

$$COP_{LTC} = \frac{Q_{EVA}}{W_{LTC}} = \frac{(h_1 - h_4)}{(h_2 - h_1)}$$

(b). COP of high temperature circuit cascade vapour refrigeration system is given by:

$$COP_{HTC} = \frac{Q_{EVA}}{W_{HTC}} = \frac{(h_5 - h_8)}{(h_6 - h_5)}$$

(c). COP of overall cascade vapour refrigeration system is given by:

$$COP_{CASCADE} = \frac{Q_{EVA}}{W_{LTC} + W_{HTC}}$$

$$COP_{CASCADE} = \frac{COP_{LTC} \times COP_{HTC}}{1 + COP_{LTC} + COP_{HTC}}$$

Where COP_{LTC} = COP of low temperature circuit cascade vapour refrigeration system.

COP_{HTC} = COP of high temperature circuit cascade vapour refrigeration system.

(d). Mass Equilibrium

$$\sum_{in} \dot{M_1} = \sum_{out} \dot{M_2}$$

(e). Energy Equilibrium

$\dot{q}$- $\dot{w}$=$\sum_{out} \dot{M_2} h_2$-$\sum_{in} \dot{M_1} h_1$

(f).Various relations are:

Evaporator Capacity

$\dot{Q}_{Eva}$ = $\dot{M_{LTC}}$ ∗(h_1-h_4)

FOR LTC:

$\eta_{LTC\ ISEN} = \frac{h_{2s-}\ h_1}{h_2 -\ h_1}$

FOR HTC:

$\eta_{,HTC\ ISEN} = \frac{h_{6s-}\ h_5}{h_6 -\ h_5}$

FOR LTC, power of compressor is given by equation:

$\dot{W}_{LTC}$ = $\dot{M_{LTC}}$ ∗(h_2-h_1)

FOR HTC, power of compressor is given by equation:

$\dot{W}_{HTC}$ = $\dot{M_{HTC}}$ ∗(h_2-h_1)

Actual work done for cascade vapour refrigeration system:

W_{ACT}= $\dot{W_{HTC}}$ + W_{LTC}

Heat transfer in the cascade heat exchanger

$\dot{Q_{CASCADE}}$ = $\dot{M_{LTC}}$ ∗(h_2-h_3) = $\dot{M_{HTC}}$ ∗(h_5-h_6)

Condenser Heat dissipation

$\dot{Q_{HTC}}$ = $\dot{M_{HTC}}$ ∗(h_6-h_7)

EXERGY DESTRUCTION can be calculated by following relations:

(A). $\dot{Ex}_{CON}$= $\dot{M_{HTC}}$$T_o$∗($s_7$-$s_6$) + $\dot{M_{HTC}}$$T_o$∗($h_6$-$h_7$)/$T_{CON}$

(B). $\dot{Ex}_{EVA}$ = T_o [$\dot{M_{LTC}}$ ∗ (s_1-s_4) - $\dot{M_{LTC}}$ ∗(h_1-h_4)/T_{EVA}]

(C). $\dot{Ex}_{LTC\ Comp}$= $\dot{M_{LTC}}$$T_o$∗ ($s_2$-$s_1$)

(D). $\dot{Ex}_{HTC\ Comp}$= $\dot{M_{HTC}}$$T_o$ ∗(s_6-s_5)

(E). $\dot{Ex}_{LTC\ Expansion\ device}$= $\dot{M_{LTC}}$$T_o$ ∗(s_4-s_3)

(F). $\dot{E}x_{HTC\ Expansion\ device} = \dot{M}_{HTC} T_{o*} (s_8 - s_7)$

(G). $\dot{E}x_{Cascade\ Heat\ Exchanger} = T_o [\dot{M}_{LTC} *(s_3 - s_2) + \dot{M}_{HTC} *(s_5 - s_8)]$

Value of TOTAL EXERGY DESTRUCTION can be calculated by following relation:

$$\dot{E}x_{Total} = \dot{E}x_{LTC\ Comp} + \dot{E}x_{HTC\ Comp} + \dot{E}x_{Con} + \dot{E}x_{LTC\ Expansion\ device} +$$

$$\dot{E}x_{LTC\ Expansion\ device} + \dot{E}x_{Cascade\ heat\ exchanger} + \dot{E}x_{Eva}$$

EXERGETIC EFFICIENCY can be calculated as following:

$$\eta_{Ex} = \frac{\dot{W}_{HTC} + W_{LTC} - \dot{E}x_{Total}}{\dot{W}_{HTC} + W_{LTC}}$$

7. RESULTS & DISSCUSSION

Result of this analysis broadly classified into two sections:

1.**PERFORMANCE OF CASCADE VAPOUR REFRIGERATION SYSTEM USING R41/R290 REFRIGERANT COUPLE.**

2.PERFORMANCE OF CASCADE VAPOUR REFRIGERATION SYSTEM USING R41/R600 REFRIGERANT COUPLE.

2.1 IMPACT OF VARYING T_{EVA} ON COP

If T_{EVA} varying from -60^0 to -24^0C .Other design parameters (constants) are taken as follows:

(1).Condenser temperature $T_{con}=27^0$C

(2).Temperature difference in cascade heat exchanger $\Delta T = 4^0$C

(3).Temperature of LTC side of cascade heat exchanger $T_{casltc} = -7^0$C

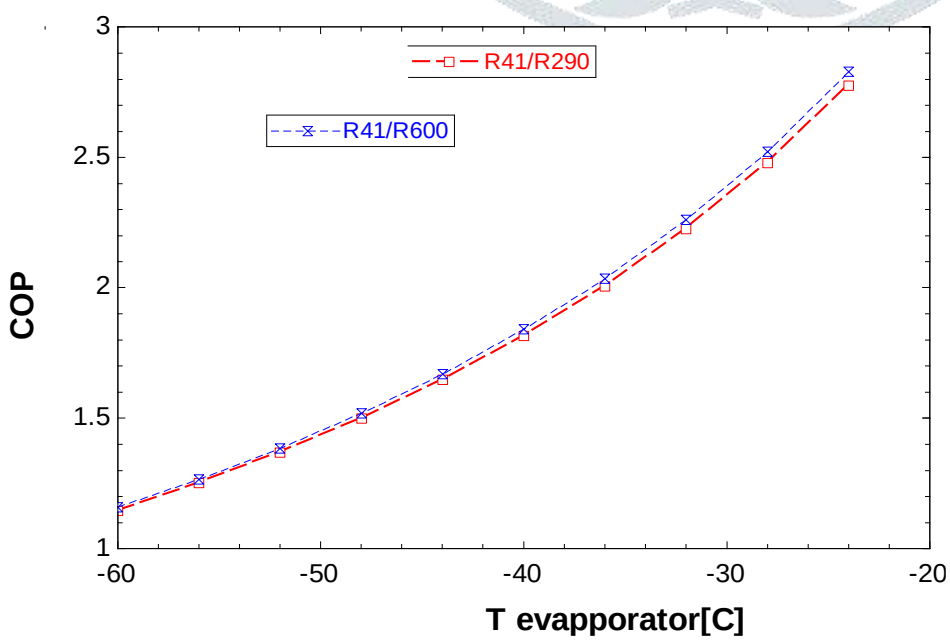

FIG 2. IMPACT OF VARYING T_{EVA} ON COP

2.2 IMPACT OF VARYING T_{CON} ON COP

T_{CON} varying from 27^0 to 45^0C .Condenser temperature varying at a interval of 2^0C.Other design parameters (constants) are taken as follows:

(1).Evaporator temperature T_{eva}=-60^0C

(2).Temperature difference in cascade heat exchanger $\Delta T = 4^0$C

(3).Temperature of LTC side of cascade heat exchanger T_{casltc}= -7^0C

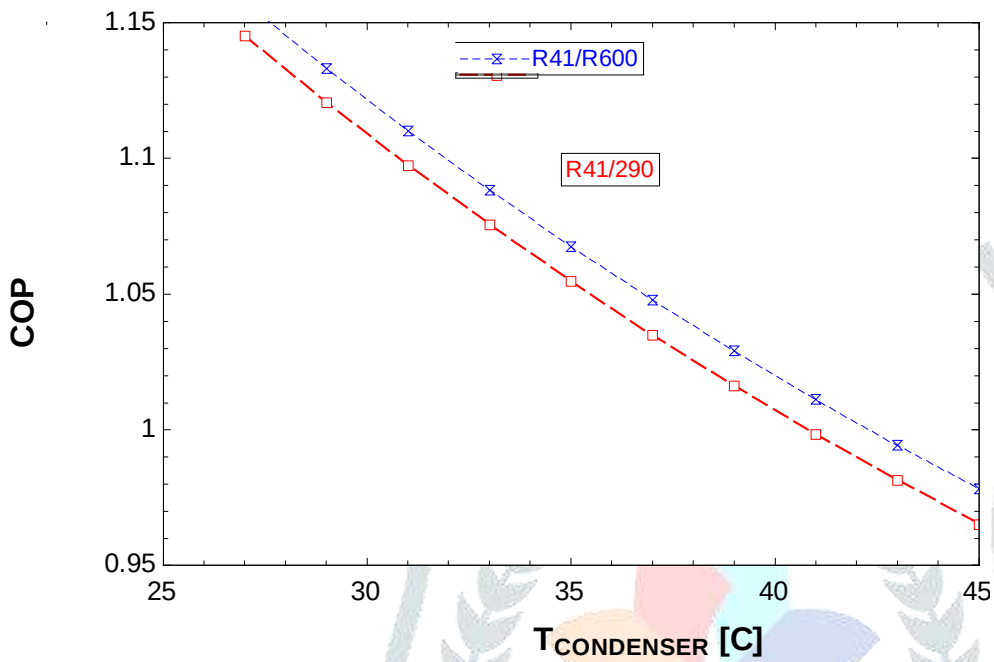

FIG 3. IMPACT OF VARYING T_{CON} ON COP

2.3 IMPACT OF VARYING T_{CASLTC} ON COP

T_{CASLTC} varying from -30^0 to -3^0C .Temperature varying at a interval of 3^0C.Other design parameters (constants) are taken as follows:

(1).Evaporator temperature T_{eva}=-60^0C

(2).Temperature difference in cascade heat exchanger $\Delta T = 4^0$C

(3). Condenser temperature T_{con}=27^0C

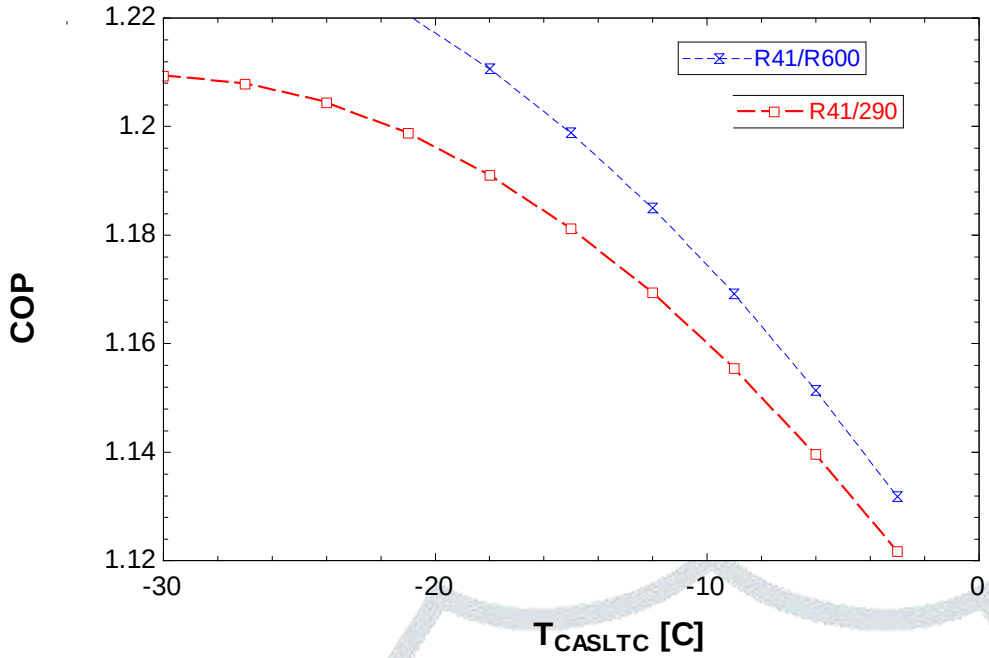

FIG 4. IMPACT OF VARYING T_{CASLTC} ON COP

8. CONCLUSION

In my research work, a Numerical Model is prepared by the help of engineering equation solver software to estimate the performance of cascade vapour refrigeration system for R41/R290 & R41/R600 refrigerant couples. Performance of cascade vapour refrigeration system for both refrigerant couples are thermodynamically compared for finding out which pair is best one in terms of performance. Performance of cascade vapour refrigeration system is express by COP. Important conclusions of my research work are following:

(1).On the basis of thermodynamic investigation, performance of R41/R600 is better than R41/R290.

(2).Coefficient of performance (COP) of refrigerant pair R41/R600 is higher compared to R41/R290 refrigerant pair used in cascade vapour refrigeration system.

(3). If the evaporator temperature T_{EVA} is increasing, the overall COP of cascade system is also increasing from 1.158 to 2.828 for R41/R600 refrigerant pair & from 1.145 to 2.775 for R41/R290 pair.Both refrigerant pairs operating at same evaporator temperature(-60^0 to -24^{0}C).R41/R600 refrigerant couple shows better cofficient of performane compared to R41/R290 refrigerant couple in cascade vapour refrigeration system.

(4). If the condenser temperature T_{CON} is increasing, the overall COP of cascade system is decreasing from 1.145 to 0.965 for R 41/R290 refrigerant pair & from 1.158 to 0.9781 for R 41/R600 refrigerant pair.Value of COP is slightly higher for R41/R600 refrigerant couple in cascade vapour refrigeration system compared to R41/R290 refrigerant couple ,operating at same condenser temperature T_{CON} (27^0 to 45^{0}C).

(5). If LTC side cascade condenser T_{CASLTC} is increasing from -30^0 to -3^{0}C , the overall COP of cascade system is decreasing for both refrigerant couples. COP is decreasing from 1.209 to 1.122 for R41/R290 & from 1.238 to 1.132 for R41/R600.Maximum COP is equal to 1.238 for R41/R600 & maximum COP is equal to 1.209 for R41/R290. Value of COP is slightly higher for R41/R600 refrigerant couple in cascade vapour refrigeration system compared to R41/R290 refrigerant couple ,operating at same T_{CASLTC}.

(6). As the evaporator temperature T_{EVA} increases, the refrigeration impact increments imperceptibly and the pressure ratio is decreases.The necessary total compressor work W_{TOTAL} reduces essentially, subsequently the presentation of the cascade vapour refrigeration system increments significantly.

(7).Total exergetic losses X_{TOTAL} less for R41/R290 refrigerant couple compared to R41/R600

refrigerant couple cascade vapour refrigeration system.

(8). R290 & R600 both are natural refrigerants & can be considering as eco friendly refrigerants make refrigerant pair with R41for cascade vapour refrigeration system.

REFERENCES

[1]. **BARIS YILMAZ, EBRU MANCUHAN AND DENIZ YILMAZ ,**Theoretical Analysis Of A Cascade Refrigeration System With Natural And Synthetic Working Fluid Pairs For Ultra Low Temperature Applications, J. of Thermal Science and Technology , ISSN 1300-3615,40, 1, 141-153 (2020).

[2]. **YIJIAN HE , YUNYUN JIANG , YUCHEN FAN , GUANGMING CHEN , LIMING TANG,** Utilization of ultra-low temperature heat by a novel cascade refrigeration system with environmentally-friendly refrigerants, **Elsevier** , Renewable Energy 157 (2020) 204-213.

[3]. VICTOR ADEBAYO, MUHAMMAD ABID, MICHAEL ADEDEJI, MUSTAFA DAGBASI, OLUSOLA BAMISILE, Comparative thermodynamic performance analysis of a cascade refrigeration system with new refrigerants paired with CO2, **Elsevier,** Applied Thermal Engineering (2020) 116286.

[4]. **SHYAM AGARWAL, AKHILESH ARORA , B.B. ARORA,** Energy and exergy analysis of vapor compression–triple effect absorption cascade refrigeration system **, Elsevier,** Engineering Science and Technology, an International Journal 23 (2020) 625–641.

[5]. YOUSUF ALHENDAL, ABDALLA GOMAA, GAMAL BEDAIR AND ABDULRAHIM KALENDAR, Thermal Performance Analysis of Low-GWP Refrigerants in Automotive Air-Conditioning System. Advances in Materials Science and Engineering, Volume (2020) , Article ID 7967812.

[6]. **K.LOGESH, S. BASKAR, MD AZEEMUDEEN.M, B.PRAVEEN REDDY, GAJAVALLI VENKATA SUBBA SAI JAYANTH,** Analysis of Cascade Vapour Refrigeration System with Various Refrigerants, **Elsevier,** 18 (2019) 4659–4664, ICMPC-(2019).

[7]. **FATIH YILMAZ & RESAT SELBAS,** Comparative thermodynamic performance analysis of a cascade system for cooling and heating applications, International Journal of Green Energy,16:9, 674-686, (2019).

[8]**. LUIZ HENRIQUE PAROLIN MASSUCHETTO, RAIZABARCELOSCORREADO NASCIMENTO, STELLA MAIA ROCHA DE CARVALHO, HUGOVALENCADE ARAUJO, JOSEVICENTEHALLAK D'ANGELO ,** Thermodynamic performance evaluation of a cascade refrigeration system with mixed refrigerants: R744/R1270, R744/R717 and R744/RE170, **Elsevier,** International Journal of Refrigeration 106 (2019) 201–212.

[9].**EBRU MANCUHAN, BARIŞ TUNC, KUBRA YETKIN, CEM CELIK, '**Comparative Analysis Of Cascade Refrigeration Systems' Performance And Environmental Impacts, JOTCSB (2019);2(2):97–108.

[10]. **RANENDRA ROY, BIJAN KUMAR MANDAL,** Thermo-economic analysis and multi-objective optimization of vapour cascade refrigeration system using different refrigerant combination, Springer, Journal of Thermal Analysis and Calorimetry, August (2019).

[11]. **SUN, Z.; WANG, Q.; DAI, B.; WANG, M.; XIE, Z.** Options of low global warming potential refrigerant group for a three-stage cascade refrigeration system. Int. J. Refrig. (2019), 100, 471–483.

[12]. **CANAN CIMSIT,** Thermodynamic Performance Analysis of the double effect absorption –vapour compression cascade refrigeration cycle. Journal of Thermal Science and Technology, Vol.13, NO.1 (2018).

[13].**LEONARDO ARRIETA MONDRAGON, GUIMLLERMO VALENCIA OCHOA, GAUDY PARDA BOTIA,** Computer-Aided Simulation of the Energetic and Exergetic Efficiency of a Two Stage Cascade Cooling Cycle, International Journal of Applied Engineering Research, ISSN: 0973-4562, Volume 13,NO. 13 (2018), pp. 11123-11128.

[14].**JINKUN ZHOU, SHENGJIAN LE, QIN WANG AND DAHONG LI,** Optimization analyses on the performance of an auto-cascade absorption refrigeration system operating with mixed refrigerants, International Journal of Low- Carbon Technologies (2018), 13, 212-217

[15]. **R S MISHRA,** Thermal modeling of three stage vapour compression cascade refrigeration system using entropy generation principle for reducing global warming and ozone depletion using eco friendly refrigerants for semen preservation, International Journal of Research in Engineering and Innovation Vol-1, Issue-2, (2017), 22-28

[16]. **ZHILI SUN, YOUCAI LIANG , SHENGCHUN LIU, WEICHUAN JI, RUNQING ZANG, RONGZHEN LIANG, ZHIKAI GUO,** Comparative analysis of thermodynamic performance of a cascade Refrigeration system for refrigerant couples R41/R404A and R23/R404A, **Elsevier,** Applied Energy 184 (2016) 19–25

[17]. **MANOJ DIXIT, S.C. KAUSHIK, AKILESH ARRORA,** Energy & Exergy Analysis of Absorption –Compression Cascade refrigeration system, Journal of Thermal Engg. 5(2016), pp 995-1006.

[18].**UMESH C.RAJMANE,** A Review of Vapour Compression Cascade Refrigeration System, Asian Journal of Engineering and Applied Technology, Vol.5 No.2, (2016), pp.36-39.

[19].**J.S.JADHAV, A.D.APTE,** Review of Cascade Refrigeration System with Different Refrigerant Pairs, International Journal Of Innovations In Engineering Research And Technology [Ijiert] ISSN: 2394-3696 Volume 2, Issue 6, June (2015).

[20]. **K.S. RAWAT, H. KHULVE, A.K. PRATIHAR,** Thermodynamic Analysis of Combined ORC-VCR System Using Low Grade Thermal Energy International Journal for Research in Applied Science & Engineering Technology (IJRASET) Volume 3 Issue VII, July (2015).

[21]. **A. D. PAREKH, P. R. TAILOR,** Thermodynamic Analysis of Cascade Refrigeration System Using R12-R13, R290-R23 and R404A-R23, International Journal of Mechanical and Mechatronics Engineering, 8(8), (2014)1351-1356.