LOW-COST TECHNOLOGYSOLUTIONFOR EFFECTIVE SANITIZATION OF COMMUNITY TOILETS

1. Shakti Raj Chopra
2. SaiTeja Amirishetti
3. Sama Venkata Sai Manikanta Dharma Teja
4. Narasimha Narala
5. Aakash Reddy Bathina
6. Charan Kumar Dabbara

Author Affiliations

1) School of Electronics and Communication Engineering
Lovely Professional University)
Phagwara, India
2) School of Electronics and Communication Engineering
Lovely Professional University)
Phagwara, India
3) School of Electronics and Communication Engineering
Lovely Professional University)
Phagwara, India
4) School of Electronics and Communication Engineering
Lovely Professional University)
Phagwara, India
5) School of Electronics and Communication Engineering
Lovely Professional University)
Phagwara, India
6) School of Electronics and Communication Engineering
Lovely Professional University)
Phagwara, India

Author Emails

a. shakti.chopra@lpu.co.in
b. amirishettisaiteja@gmail.com
c. svsmdharmateja@gmail.com
d. naralanarasimha100@gmail.com
e. akashbabblu9@gmail.com
f. charancherrychamp@gmail.com

Abstract. Moving towards our goal of a developed and prosperous nation, cleanliness is one of the biggest needs in our life. 'Swatch Bharat Abhiyan' is our main motto behind the research of our project **Low-cost Technology Solution For Effective Sanitization of Community Toilets** and it leads towards the cleanliness of private and public Toilets. The grimy toilets cause contagious diseases which are hazardous for human life. This system rectifies our human health as well as our goal towards 'clean and smart India. The purpose of the project is a hygienic level of cleaning the toilets by using sanitization. At Present the situation the cleaning of toilet is worst and its leads to health issues. By using a servo motor, which is attached to the flush, by this, its will automatically sanitize. In this system, there is no usage of water and electricity. But by using an energy source it will work automatically. The advantage of the system is that it reduces labor work. It is affordable for consumers for its implementation.

I. INTRODUCTION

The impact of waste can be bodily, Microbiological, organic, or Chemical sellers of disease. Sanitation refers to public health and it is also for the hygienic method of promoting fitness thru the prevention of human contact with waste.

In today's world, hygiene in public facilities is the most important aspect of urban sanitation. There is no other cleaning system for cleaning facilities than by doing it manually, which requires a lot of human efforts and still has more possibility of spreading the contagious diseases which are very dangerous and even death[1].

This system has been designed from the point of view of eliminating the efforts for such heavy jobs that a human does.

nowadays creation of a bathroom is accountable for the householder's but investments in sanitation through the poor households are enforcing force through diverse troubles along with affordability and uncertainty over land tenure. in case you having a proper sanitation facility results in hygienic dwelling conditions, that is a fundamental proper of the people of India below Article 21 of the Indian charter which offers the security of lifestyles [2].

The most important thing for every country is to need to be very clean, neat and Green. Everyone is supporting this one from various countries are implementing different kinds of Missions to achieve this goal. In this the main aim of our goal is Sanitization. When it comes to our country our government is going to give more priority to this project. So under this project Government had implemented the community toilets in most number. By this Project, the community toilets can get cleaned more effectively with less cost and manpower[6].

The main motto behind our project is that toilets to get automatically cleaned with the help of this project and it leads to a reduction in manpower. In this kind of our project, we are going to use electricity that will be used to get the work done automatically that can be drawn through the solar panels arranged on the roof of the community toilets. It is going to be cost-effective but on another hand, it is almost free of cost in implementing except its maintenance but this is not so expensive[5].

While these community toilets are establishing the government has one more challenge regarding these because if the community toilets are far away from main cities the public won't use them more and also if anyone is going to use them after a long time it is impossible to use them as well as it leads to lack of maintenance too. In that situation, if the community toilet is not being used so the government should get rid of that resources.

Traditionally public policy on fundamental urban services in India has been targeted on water deliver, which has loved primacy inside the investments whilst sanitation has lagged. Even these days, nearly one-fourth of the urban populations in India do not have get admission to to secure and sanitation centres.

Insufficient get right of entry to sanitize specially in excessive-density urban slum settlements is one of the key obstructions to enhancing the first-rate of life and productivity of city centres. in the absence of quick and effective measures, we also run the chance of unexpectedly increasing vulnerability to illnesses as a result of such conditions [4].

Maintaining this as a concept; I've decided to focus on my ideas: "whether sanitation can come out as a profitable possibility with the supply of low-cost technological options.

A. MOTIVATION

*India is a developing country but villages have not been developing. Villages are considered the backbone of our country.

* Nowadays, the villages don't have a proper toilet. By considering the health of the people we have decided to implement automatic Sanitization of the toilets which are implemental at the low cost.

* It will not require any type of mankind's power. It works by the power of the electricity and the power is continuously by placing the Solar power panels.

*These will generate power and helps for the continuous Sanitization of the t

oilets.

* With the help of the continuous Sanitization of toilets, we can reduce the work of the man such as cleaning will be reduced and the health of the people can be protected.

*The main motto of our project is to decrease the illness and work of the people. By this project, we can plant the automatic Sanitization systems in every toilet at a very low cost and can ensure the health and hygienic of the people.

B. CONTRIBUTION

*The contribution of "Low-cost sanitization of public toilets using IoT technology " towards society is, by proper maintenance and sanitization of public toilets helps to decrease the diseases and improves the health of the public and also it decreases the attack of viruses, bacteria, and strains which causes diseases and viral fevers.

*With the inclusion of IoT technology in these projects, we can provide a lot of job opportunities to the people who are educated.

*By using automation sanitization in public toilets, it decreases the cost of labor which eventually increases the economy of the government.

*With this automation sanitization using IoT technology, we can step ahead in the swatch- Baharat mission across our country.

*The main contribution of this project is to increase the hygienic conditions in public toilets which eventually decreases the diseases and also it is used to save water and maintain the sustainability of resources[3].

C. ORGANISATION

This model is prepared in the following manner such as

By discussing the total connections between the components.

By keeping the main objective of the model which is useful for everyone

Explains the realization of the objective

D. TYPES OF FAULTS

It has a very large infrastructure investment.

The dependence on energy sources is very high.

The cost of removing sludge is very high.

High Demonstrated technical functioning.

Lack of sanitization and hygienic technology.

Large capital investments are both practical and financial.

It is not suitable for rural areas as it is so expensive as well as it needs more areas.

The pit should be removed by the manual process.

II. REALIZATION AND REPRESENTATION OF OBJECTIVES:

BLOCK DIAGRAM

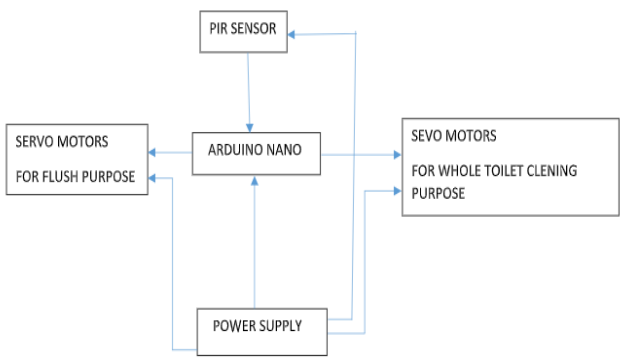

Fig 1: block diagram of community sanitization of toilet

AS shown in fig1 Power Supply will be given to the Arduino. PIR Senor will be connected to the Arduino. Arduino will be connected to the servo motors one for flush purposes and the other servomotor for the whole toilet cleaning. By Giving the Arduino command with the help of a timer that has been interconnected within the Arduino itself will get started working. The main thing is here according to the timer count it is going to decide whether only to flush or any need to clean the entire toilet. Here if the Human presence is less than 3 minutes, the flush will only work. if the Human presence more than 3 minutes, then there is a need to clean the entire toilet.

A. Algorithms:

1) Algorithm: Power Supply

Step1: Apply Power supply through battery lithium-ion (5v)

Step2: the power supply will go to the Arduino and it is connected to the ground state and the PIR sensor is also connected to Arduino only.

Step3: For the working purpose of the flush we are given the power to the servo motor with a 5voltage supply

Step4: And last for cleaning purpose of toilets we given power supply through a battery and it is connected to the servo motor.

Step 5: finally through given voltage it will generate a power supply

2) Algorithm: Arduino

Step1:Arduino will be connecting to the servomotors.

Step2:One with Flush and Whole toilet.

Step3:Arduino will be given the information on whether to flush or whole toilet by the PIR Sensor.

3) Algorithm: PIR Sensor

Connecting PIR sensor to a micro controller is an easy task.

Step1: The PIR acts as a digital output, it can be high voltage or low voltage, so all you want to do is concentrate for the pin to flip excessive (detected) or turn low (now not detected) through listening on a digital input to your Arduino.

Step2:Provide power to the PIR with 5V and connect ground to ground.

Step3: Connect the output to a digital pin . In this example, we'll use pin 2.

The code is very simple and is simply continues song of whether or not the enter to pin 2 is excessive or low. It also tracks the country of the pin, in order that it prints out a message whilst movement has started out and stopped.

4) Algorithm: Servomotor with Flush and Toilet

Step1:Servomotor typically have three connections are following

GND: - is connected for both motor and logic.

5V: - is a positive voltage it gives power supply the servomotor is the input for the control system

Step2:PIR sensor is connected to the servomotor. PIR sensor gives the signal to servomotor when it gets positive signal or 1 to servomotor gets started.

Step3:When the motor is ON it takes water into the flush.

Step4:When we get a negative signal or 0 the servomotor gets stopped.

Step5:When the motor is stopped it will automatically flush.

Step6:When human presence is less than 3 times the flush is on.

Step7:When human presence is more than 3 times servomotor for a toilet.

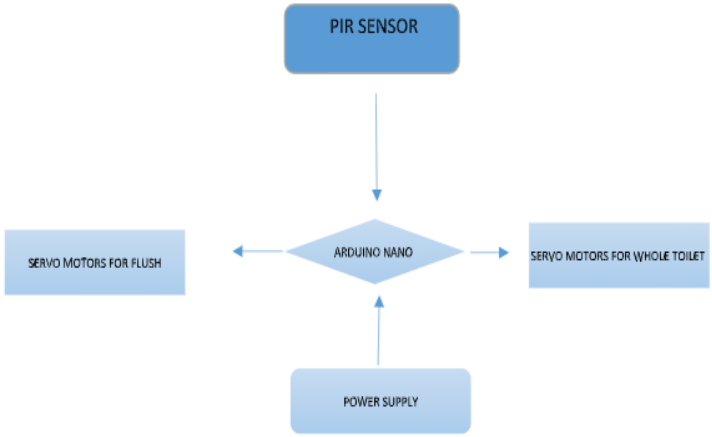

Fig 2: flow chart of sanitization of community toilets

- As shown in fig2 Let's start with the PIR sensor it's the main responsible for detecting whether human presence is there or not.

*Aurdino gets the information from the PIR sensor and gives instructions to the servo motor to do the task which is already installed in the

program

*Servomotor for flush gets on when a

person in a toilet leaves the toilet before three minutes

as per the given instructions from the Arduino, the PIR sensor detects the human presence is there or not.

*Servomotor for toilet gets on when a

person in the toilet leaves after 3 minutes

*For all the processes mentioned above power comes from the main power supply only.

B. HARDWARE REQUIREMENTS

PIR Sensor

Arduino nano

Servo motors

Power Supply

1) Pyroelectric infrared Sensors:

A PIR Sensor is an digital sensor that measures the light from radiating gadgets in point of view. The Sensors permit us to sense the motion whilst the objects are moved in or out of the sensor range. through using this sensor the electricity consumption and costs are very low.

2) Arduino:

Arduino is the platform for open-source electronics. The way of Arduino is used in hardware and software is very easy. Arduino comes in a complete package deal from which includes the 5v regulator a[2].

3) Serial Microcontroller:

Communication Interface, LED and headers for the connection.

4) Power supply:

It is an electric powered tool that components electricity to the electric load. the energy deliver used to convert electric powered modern-day from a selected source to rectify the voltage frequency and current to the weight.

C. *Servo motors*: *A servomotor is an actuator that is linear or rotary motion. It permits for specific manipulate of linear position, velocity, and acceleration. For the position remarks, it consists of a appropriate motor coupled to a sensor.it is used in a closed-loop manage system.*

D. WORKING

*The most important thing is about the component placement. We have used different components to buildup this Project.

*Firstly, the PIR Sensor is should be Placed behind the flush. This PIR Sensor usually works with radiant heat.

*The next thing is Servomotors. The servomotor can rotate with great precision. These Servomotors play a key role in handling the working of these things Automatically.

*The next step is we will program the Arduino nano in such a way that when a person is going to enter the toilet, the PIR Sensor will start the timer which is going to be an inbuilt feature in the Arduino nano itself. The Timer gets terminated when the sensor stops sensing the human Activity.

*The main thing is here according to the timer count it is going to decide whether only to flush or any need to clean the entire toilet. Here if the Human presence is less than 3 minutes, the flush will only work. if the Human presence more than 3 minutes, then there is a need to clean the entire toilet.

*We use the Servomotors to automatically turn on the flush. There will be a common water pipe to all the toilets, so we will use the servomotors at all the valves. Here The servomotors are interfaced with the Arduino nano. So, it will Automatically control the valves as well as flush. To this pipe which has a valve, the small pipes are connected to all the sides of the floor so that the entire floor gets cleaned.

*We will also design the Program in such a way that daily at 5 A.M all the community toilets get cleaned to help the toilets without going under maintenance even though they are not used for a long period.

*Since there is the usage of the electric power by the Arduino nano and the other sensors and motors, we will keep the solar plates on the toilet roofs and a solar kit which also helps to draw the solar power. It also helps to run the motor which fills the water tank using solar power.

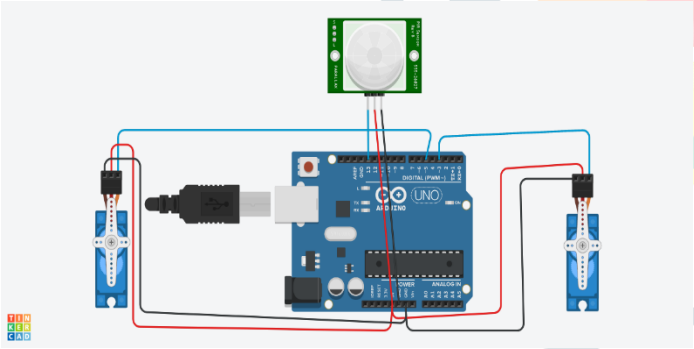

Fig 3: connection diagram

*As shown in fig3 By using a battery we have given the power supply to Arduino which is connected to the Vcc and ground state.

*Another pin is connected to the servo motors for flush and cleaning toilets purpose.

*PIR sensor is connected to the Arduino.

*By using servo motors both the pins are connected to the Arduino digital pins and another two pins are connected to Arduino ground state.

III. RESULT

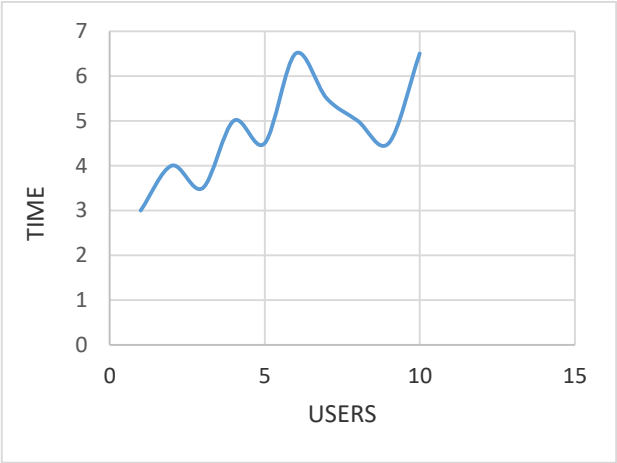

Fig.4.For 10 user

Ton = 48 Toff = 1392

Duty cycle=(48/48+1392)*100 = 3%

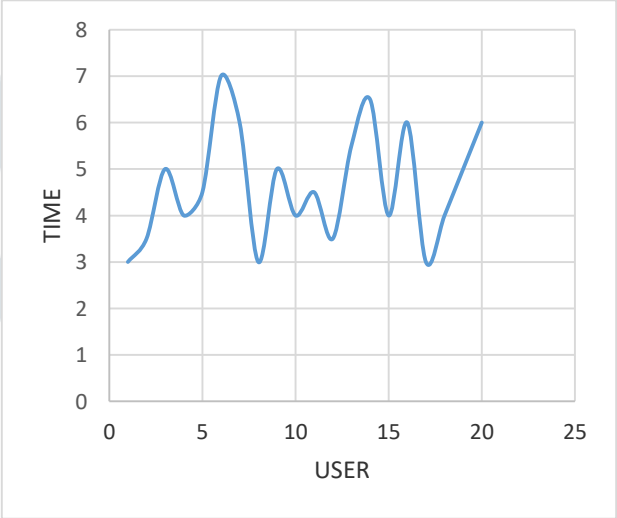

Fig.5. For 20 user

T0n = 93 Toff = 1347

Duty cycle =(93/93+1347)*100 =6.6%

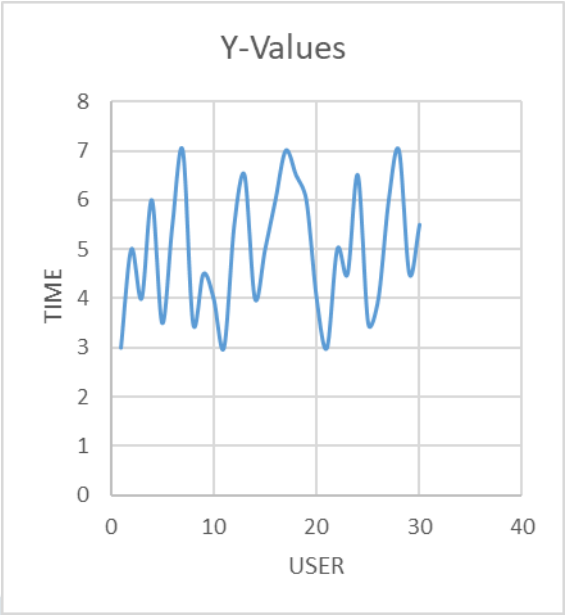

Fig.6. For 30 user

Ton = 149 Toff = 1291

Duty cycle = (149/149+1291)*100 =10%

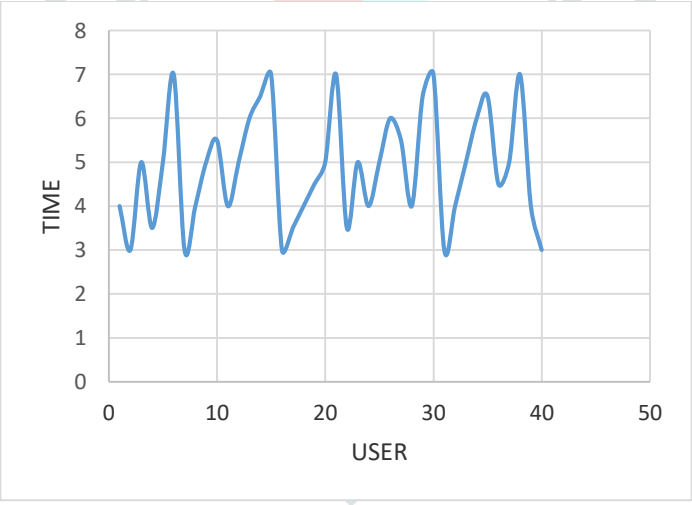

Fig.7. For 40 user

Ton = 195 Toff = 1245

Duty cycle =(195/195+1245)*100 =13%

From the graph we came to know that the users are increasing and also decreasing from varying time to time.Sometimes it goes high and then it goes low but here the main thing is that the average no of users using this sanitation facility.

Fig 4,Fig5,Fig6,Fig7 show that as number of users increasing duty cycle of the system increases it means that better utilisation of community toilets occurs.hence the system is working properly.

CONCLUSION

The main motive of our project is to get awareness among people by maintaining the toilets properly. It helps them to leave life hygienic and healthy. The project consists of power as the main source for the automatic continuous working of the sanitization process. It doesn't require any type of manpower and it is done at a low cost. The automatic sanitization system will help in keeping the toilets clean and does the proper sanitization process. Due to this system, every toilet is maintainable clean and we can see good health for the people and our country will be developed quickly. India is always a developing country but with the proper maintenances of toilets, we can have proper health and hygienic. It will help our country to move forward and helps in the development of the country. Every country in this world is suffering from various kinds of diseases. In most of that, the main problem is related to the sanitization facilities. it's miles an extended manner to make India completely loose from this type of risky sickness and defecation. i'm hoping my research will take an exquisite step towards this task. With the assist of diverse published files on urban development and plenty of greater, I've defined the exceptional technology in India. This project is already and can be taken by using government, Non-authorities and private on this discipline.

So, by using taking a nearby area as a case examine, we have advanced a business version with an in depth value evaluation of a favoured technological alternative. The Indian government is also going with the same idea to improve the sanitation facilities implementing missions like Swatch Bharat to make the country Clean and Green.

REFERENCES

1. Anil C. Gawande, Shivani Telrandhe, Ashwin Satone, Prasad Kade, "*Design And Fabrication of Advanced Mechanism for Indian Toilet Dome Cleaning with Multi Washer's Assembly*" International Journal of Research in Advent Technology, Vol.6, No.4, April 2018.
2. Yusuf Abdullahi Badamasi, *"The Working Principle of an Arduino"* 2014 IEEE Conference
3. S.M. Ashiq. K. Karthikeyan, S. Karthikeyan (2013, Feb.). "*Electrical Fabrication of Semi-Automated Pressurized Flushing System in Indian Railway Toilet.*" International Journal of Engineering and Advanced Technology (IJEAT).
4. Chien-Wei Chen, Rui-Ming Hong, Hung-Yu Wang, *"Design of a controlled robotic arm",* 2016 3rd International Conference on Green Technology and Sustainable Development.
5. E.Elakiya, K.Elavarasi, Mrs.R.P.Kaaviya Priya, "*Implementation of onSmart Toilet (swatch shithouse) using IOT embedded sensor devices* " International Journal of Advanced Research Trends in Engineering and Technology (IJARTET) Vol. 5, Special Issue 9, March 2018.
6. Appropriate Low-cost toilet technology – An Indian perspective, Gramalaya.

"If every household clean its surroundings,

the city will be clean."