Development of a hybrid seat belt for monitoring vehicle ignition using microcontroller and sensors to reduce road accident injuries

Anikate Rana[1], Sanjog Karki[2], Ritesh Rathore[3], Rahul Kumar[4] , Dr. Gavendra Norkey[5]

[1-5]*School Of Mechanical Engineering, Lovely Professional University , Punjab*

anikate207rana@gmail.com

ABSTRACT

Every year 15-20 crore of people die because of road accidents around the world, making road accidents the seventh leading cause of death. Since childhood, we were taught how important our safety is. But still, we never pay attention to the safety guidelines while driving. According to the MORTH (Ministry of Road Transports and Highways), approximately 420 people die every day among them 62 people die due to the lack of safety norms while driving. Although the number might look very small but this becomes giant issue when one of them is related to us. Keeping all of this in our mind the proposed system covers all the current safety limitation. The system proposed here consists of a microcontroller, temperature sensor, load cell, and automated ignition circuit. Since our purposed system is integrated with various sensors and controlled with a microcontroller our system is able to detect whether the seat belt is worn or not. In each of the circumstances, the circuit responds after checking the safety norms around the driver and co-passenger seats with the help of the IoT devices. Our system consists of two modes and the main purpose of creating two modes is to prevent ceasing of ignition during any kind of dysfunction in the proposed system. Also, our purposed system is integrated with the Engine control unit so that we could change the speed and ignition of the engine. This gives us the flexibility of controlling the limit above which the vehicle could not travel if the seat belt is not worn by the occupants in the vehicle.

Key Words: Microcontroller, Seat belt, Sensors, Engine control unit

I. INTRODUCTION

Nowadays, vehicles and roads are becoming much better and faster and passengers are becoming less concerned about their safety. Seat belts are a primary safety feature used to prevent serious injuries to the passengers. Even after making it mandatory to wear seat belts, due to insufficient enforcement accidents are still increasing due to the failure of vehicle occupants to wear seat belts. This leads to fatal injuries and can likewise cause the loss of lives. As indicated by the study from New Delhi, by Maruti Suzuki 75 percent of traveller vehicle clients in India do not wear seat belts, which are prompting around 15 deaths per day. In order to decrease the death toll, we have attempted to plan a system based on IoT that will urge vehicle clients to wear seat belts appropriately all throughout the ride. This system consists of sensors and a microcontroller and it works on two different modes as selected by the driver. In normal mode ignition is only provided when the seat belts are engaged properly of both the driver and the co-driver(if present inside the vehicle) and in the maintenance mode ignition is provided regardless of the seat belt is engaged or not engaged but the vehicle runs under the specified speed.

II. LITERATURE REVIEW

The idea of making it mandatory to wear a seatbelt to protect human life and injuries during accidents is not a new concept. With the advancement and automation that we have at the moment, we can imagine the implication that can be done to make sure that everyone is wearing one to remain safe. Some of the papers that we have reviewed to find the latest trend in hybrid seat belt are listed below:

Priyal N Sheth et.al, 2015 [1] – In this paper, the author integrates different systems and sensors such as driver-assistive system, Ignition interlocking, pressure sensors, speed sensors, microcontroller, relay, etc. Wearing a seatbelt gives the high output and in every circuit, LEDs are mounted, and tracking the condition LEDs can give the feedback needed to the microcontroller. Based on the condition of wearing a seatbelt vehicle can

have two modes i.e. City mode and highway mode. In highway mode wearing a seatbelt is mandatory but in a city, the speed of the vehicle is relatively low, and avoiding a seatbelt is also an option.

Akshay Vetal et.al, 2017 [2] - In this paper, the author concluded that without fastening the seat belt of the driver the vehicle is not going to start. In this purposed system, the authors are making the use of ECU, Seat Belt Assembly, various sensors, and Actuators to make the vehicle stops if the seatbelt is not worn and also gives an estimated time when the vehicle will come to stop if the seatbelt is unfastened during cruising.

S.D. Rahul Bhardwaj et.al, 2014 [3] - In this project, the author is purposing a system that can detect the presence of the human in the car with the help of touch sensors and load cells. If the human occupant in the car fails to wear the seat belt then he purposes locking mechanism such that the vehicle will not start. Moreover, the author also describes how this locking mechanism will be stopped once the human occupant wears the seat belt.

Prof. Hemal Patel et.al, 2018 [4] - The safety system of this project is to ensure that the co-driver and driver wear a seat belt while driving a car. This project mainly contains two load cells, speed control, and ignition interlocking in the circuit. The role of the first load cell is to detect if the seat belt is worn or not and the second load cell detects the presence of the driver. In this paper, the author describes the effectiveness of preventing fatal injuries during an accident if the seat belt is worn.

Dr. Hershal Shah et.al, 2020 [5] - This purposed system consists of lots of hardware such as Ignition Interlocking System, IoT devices, Seat Belt, Seat Belt Monitoring, Raspberry Pi, Reed Switch, Load Cell, IR Temperature Sensor, RFID Tag, and Reader, etc. The sensors mounted on and around the seat detects lots of parameter like human occupants, temperature, weight, etc. and all data proceed by microcontroller after examining all data sensor detect seat belt is properly buckled or not then the engine will start. In this system during cruising if the seat belt is removed by the occupant then the speed of the vehicle will reduce to the pre-determined speed in the system.

III. RESEARCH GAPS

One of the main shortcomings that we found which doing a literature review is that most of the authors are only focusing on the driver seat only [2] [4] [6]. Most of the papers have just missed the point of consideration for the co-driver seat. Since, both the driver and co-driver are in a similar situation so they are likely to face equal chances of getting fatal injuries. Not mentioning ways to prevent the passenger in the front seat just reduces chances for the driver. In the paper, Akshay Vetal et.al, 2017 [2], the author has mentioned the use of ECU but fails to explain how it can be integrated with the system. Also, in the paper by Priyal N Sheth et.al, 2015 [1] the author has mentioned the various mode that can be installed and the driver can choose between those modes according to his/her speed but the author has failed to explain how the speed on those modes could be controlled. In the purposed system by Dr. Hershal Shah et.al, 2020 [5], the author has mentioned that the vehicle would not start if the seat belt is not worn but the author has failed to explain how the ignition of the vehicle will be stopped.

IV. WORKING MECHANISM

In the proposed model there are various component and circuits which interact with each other to perform intended functions. There are sensors: load cell and temperature, microcontroller, Engine control unit, and ignition circuits which interact with each other to perform their intended function. Sensors are connected to the microcontroller and the microcontroller reads this information and dictates the roles that should be performed by the help of the device connected as output to the microcontroller. The working of the microcontroller varies according to the different modes and scenarios it is placed in. So, the working of the purposed system can be divided into various parts. Since the action that is to be performed for the driver and passenger seat is different so it can be divided into two groups. According to the mode, the microcontroller can instruct to ignite the engine or limit the speed of the vehicle. Also, during limiting the speed the vehicle needs to be controlled so the role of the engine control unit comes into the picture and can be explained separately.

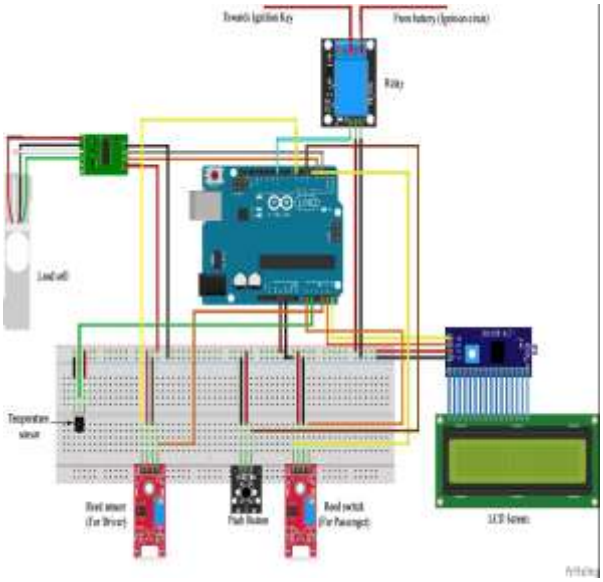

Figure (1). Circuit diagram

For drivers in the proposed system, there are two modes: Normal mode and Maintenance mode. The vehicle in the Normal mode runs as a regular passenger vehicle and maintenance mode is for the maintenance purposes. There is a Push button switch mounted on the Vehicle which is used to change the mode of the vehicle. In Normal mode, the first thing that is checked while the ignition switch is switched on is whether the seat belt is put on or not. This is done with the help of a magnetic sensor (reed sensor) mounted on the seat belt. Reed sensor is placed on the buckle of the seatbelt while the magnet that activates the sensor is placed on the tongue of the seatbelt. When the tongue of the seat belt is inserted on the buckle the reed sensor is activated and the information is sent to the microcontroller as shown in the flowchart diagram below. Once this information is received the microcontroller; it delivers input to the relay. Since the relay is connected to the ignition circuit when the microcontroller sends output to the relay the circuit is closed and lets the vehicle be ignited. On the other hand, if the reed sensor does not get activated then the microcontroller does not get any information and it does not sends any kind of output to the relay. Thus, resulting relay in the ignition circuit to be open and preventing the vehicle from igniting. At the same time, a sign blinks which indicates to wear seat belt and the alarm system also goes off warning so the driver becomes aware and wears a seat belt in order to start the vehicle.

If the push button is pressed then the mode of the car is changed to Maintenance and this mode is to be used during maintenance. This mode is used when the engine should be started during maintenance. In the maintenance mode, the configuration is different and there is no role of the reed sensor. Vehicle will ignite irrespective of the information sent by the reed sensor. One of the features which maintenance mode possesses is the ability to limit the speed of the vehicle. In this mode, the microcontroller sends an output to the Engine management system or Engine control unit (ECU) regarding the maximum speed with the vehicle can travel. Once the Engine control unit (ECU) receives this information the speed is maintained under the specified limits.

Once the checks for the driver are completed then it checks for co-driver seat.One of the major modifications done for the co-driver seat is that instead of completely stopping the ignition of the vehicle when the seat belt has not worn, the speed of the vehicle at which it is traveling is controlled. The first thing that should be done while checking whether the passenger is wearing a seatbelt or not is to check if there is any human occupant or not. For this, two types of sensors are used: Load cell or weight sensor and Temperature sensor. A load cell is used to sense the presence of any kind of force or weight on the seat and the temperature sensor is used to detect the presence of any heat source that is in contact with the seat or in its periphery. The input from these sensors is processed in the microcontroller, which helps to indicate the human occupancy. In case human occupancy is detected and the reed sensor is activated then the vehicle runs normally without any interruption. If the presence of a human is detected and the reed sensor is not activated then the microcontroller sends a signal to ECU to limit the speed upto maximum of 40 kmph .

In the purposed system, there is an addition of a relay which is normally open and is placed in between the power source and the ignition key. The addition of the relay in between these components is important because it allows the microcontroller to control the ignition of the vehicle. This arrangement is important when the driver is not putting the seat belt and trying to ignite the vehicle in the normal mode. The output from the microcontroller to the relay will only be sent when the driver puts buckles the seat belt. The output from the microcontroller energizes the relay and closes its contact. Once the contact is closed when the ignition key is switch on the ignition will take place. Failing to wear a seat belt by the driver will prevent the vehicle from ignition if the vehicle is in normal mode. The ignition circuit is mentioned below in figure (4). In maintenance mode even though the driver is not wearing a seat belt the relay will be energized as in this case the limitation of speed is there through the Engine control unit and so is in the case when the co-driver fails to buckle the seat belt.

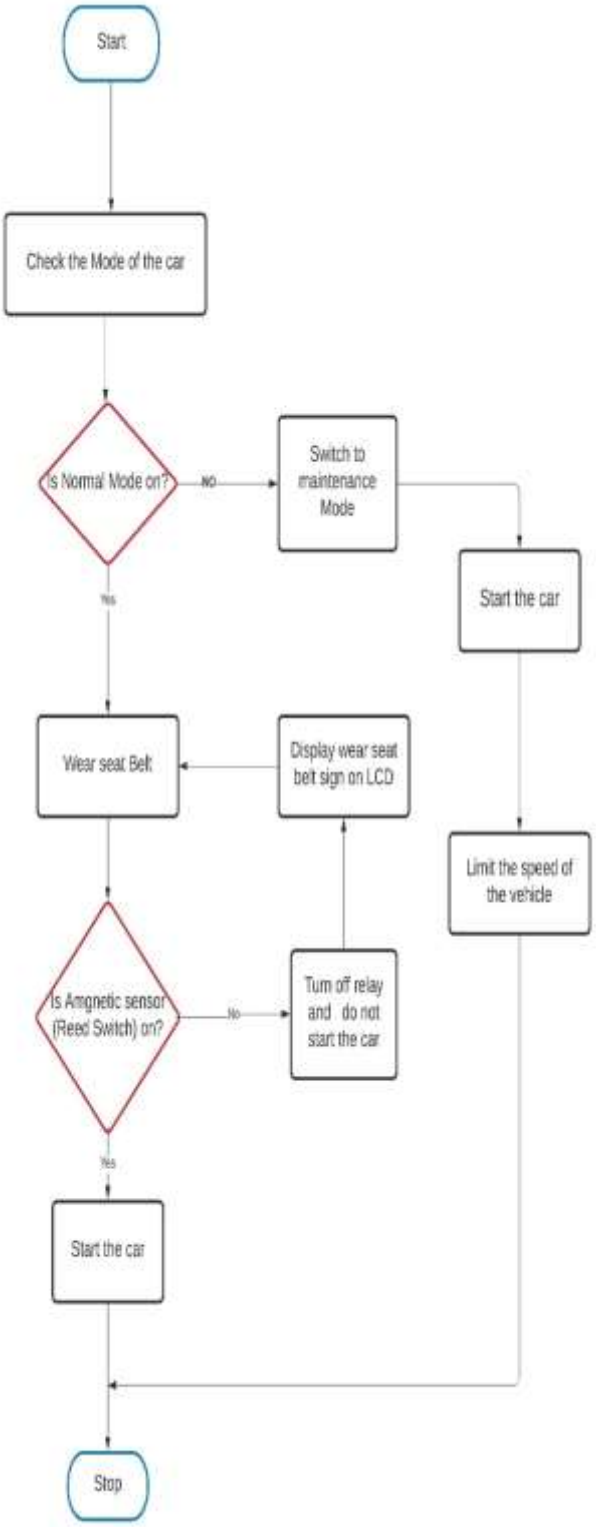

Figure (2): Flow chart diagram for Driver's Seat

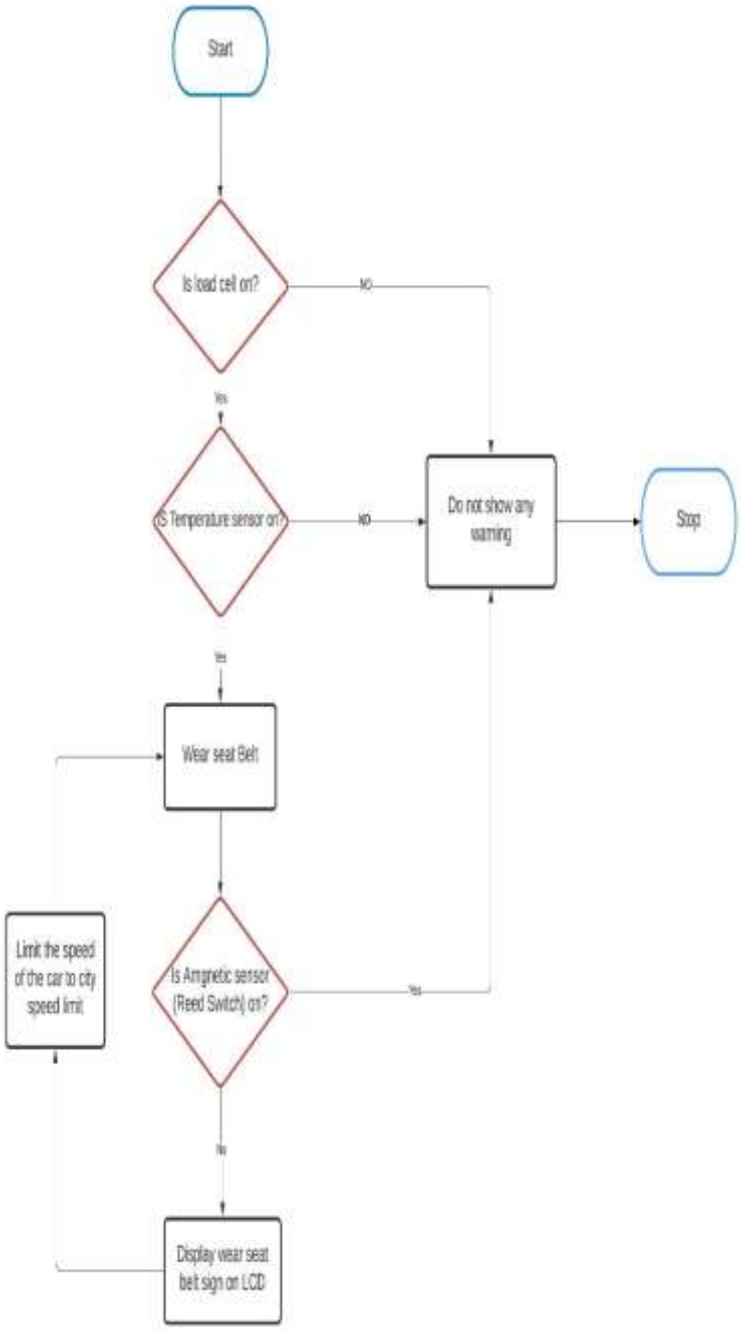

Figure (3): Flowchart diagram for the passenger seat

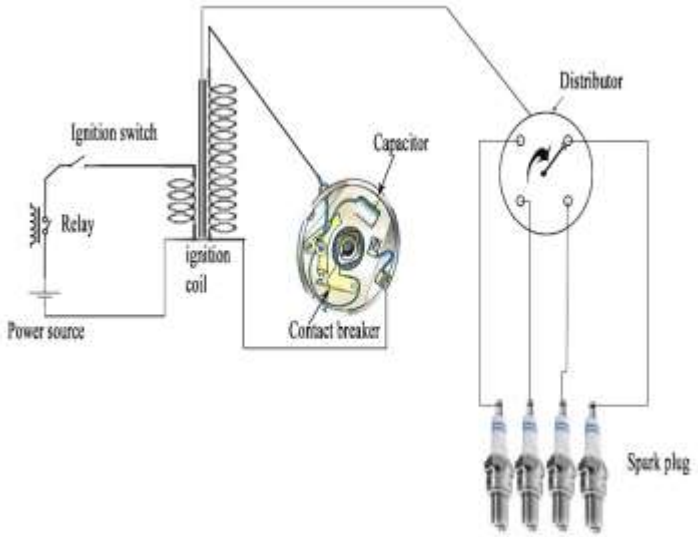

Figure (4): Modified Ignition Circuit

It is vital to have effective communication between the Engine control unit and microcontroller in order to maintain the speed of the vehicle to the limit. In order to maintain the speed of the vehicle through the engine control unit, there should be a pedal position sensor and electronic throttle control connected along with the Engine control unit. When the position of the pedal is changed by the driver the change is captured by the pedal position sensor mounted on the other side of the pedal and the same information is transmitted to the Engine control unit. Then the engine control unit changes the throttle valve mounted on the inlet of the engine. As the position of the throttle valve changes the power that the engine produces also changes due to the change in the amount of the air and fuel mixture in the engine cylinder. Now when the microcontroller is connected with the Engine control unit microcontroller indicates the maximum speed i.e 40 kmph at which the vehicle can run. When the speed is to be limited engine control unit only lets the throttle open to a certain position which provides the maximum speed that is desired by the microcontroller. Even though the position of the pedal changes to the maximum and it is captured by the pedal positional sensor this would not result in the vehicle exceeding the maximum speed that is desired. This is due to the fact that the change in throttle position is limited by the Engine control unit. Once the Vehicle is out of certain condition i.e. maintenance mode or seat belt has been buckled then the speed restriction is cancelled. Once this restriction is not accountable then the change in the position of the pedal changes the opening of the throttle valve and thus increases the speed of the vehicle.

V. CONCLUSIONS:

Most of the purposed work has an alerting system that makes the occupants of the vehicle wear the seat belt but fails to make use of it. Our purposed system not only makes the occupants aware of it but also comply them to wear one if they are in the vehicle. Integration of the relay of the microcontroller with the Engine control unit helped us to limit the speed of the vehicle to a certain speed. Limiting the speed of the vehicle or controlling the ignition restricts the driver in the ignition circuit gave us the ability to control the ignition of the vehicle and integration from driving normally. So, it makes the occupants to wear the seatbelt at any cost. If the practice of wearing a seat belt increases then the chance of getting fatal injuries reduces.

VI. REFERENCES:

1. Sheth PN, Badgujar AD. ngly to avoid fatal injurie Developing safety system for monitoring seat belt and controlling speed accordis. 2015;5(10):1–5.
2. Vetal A, Sakurde G, Salunke P, Barskar K, Prof. M. B. Bankar. SEAT BELT ALERT SYSTEM WITH IGNITION CONTROL ABSTRACT : 2017;903–4.
3. Bhardwaj SDR, Jogdhankar SR. Seat Belt Safety Features Using Sensors to Protect Occupant. Int Rev Appl Eng Res. 2014;4(4):349–54.
4. Patel PH, P CA, S BD, P PH. Wearing of Seatbelt Is Mandatory for Ignition of Engine. 2018;2133–4.
5. Shah H, Patel K, Patel N, Patel N, Patel R. Ignition Interlocking Seat Belt. 2020;2005–11.
6. Prakash.R, SaiKrishna.K, C.Sathishkumar, S.Vivekanandan. Automatic seat belt for passenger vehicle. 2016;
7. Kongovi NKP, Shushma N, Chavan SY, Manisha VS. Design and Implementation of SafetyWarning for Car driving using ARM 7. 2017;(May 2016).