Aquaponics System For Modern India

[1]Prof. Dipali Shende, [2]Shivangee Behera, [3]Simran Biramwar, [4]Priyesh Kumar
[1]Assistant Professor, [2, 3,4] BE Student
[1,2,3,4] Department of Electronics and Telecommunication Engineering
[1,2,3,4]Sinhgad Institute of Technology, Lonavala, Pune, India

Abstract : The most predominant issues of the advanced world are food and water emergencies. It is neither conceivable to devour pesticide-influenced food nor develop one own plant, because of a shortage of water and land. Under such conditions, there emerges a requirement for the convenient horticultural framework which utilizes less water, space and is natural. One such arrangement is a limited-scale aquaponic framework. The IoT-based Aquaponics Monitoring framework highlights to screen temperature and humidity level, pH, water level utilizing the particular sensors and afterward seeing those values from the sensors, the values are shown through LCD just as on the web by the utilization of Internet of Things. Here the Internet of Things has been presented that overcomes any issues between the actual world and the computerized world and that begins with things.STM32 F103C8T6 microcontroller controls all the functions.
Keywords: Aquaponics, Temperature and Humidity Sensors, STM32 F103C8T6, IoT, LCD.

I. INTRODUCTION

Agriculture is one of the significant areas in India and it has furnished the majority of the populace with normal food yet these days the utilization of pesticides has been expanded for quick development of the harvests on account of which it has made harm human wellbeing and the issues identified with soil likewise expanded in the previous few years. Because of which we have presented an aquaponics framework for the development of the plants normally with the assistance of fish extract. This procedure is executed on farming and production utilizing native and technical ideas. It also contains the strategy to fabricate an aquaponic framework reasonable for various monetary layers of the general public particularly zeroing in on the metropolitan population where there are apparent reality requirements.

II. EXISTING SYSTEM

In today's time, the world has confronted numerous medical problems because of the inaccessibility of characteristic food. Additionally, the fake composts and synthetic compounds are utilized for the quick development of plants because of which the soil loses its unique nature and it requires a very long time to recover that back. Ranchers have no option other than to develop plants falsely with the assistance of synthetics and manures accessible.

III. PROPOSED SYSTEM

In the altered aquaponics framework, the aquatic fish are taken care of day by day with the assistance of an automatic feeder. They digest the food and discharge the loss in the water. Their discharge is separated into nitrates and nitrites, which are the supplements for the plants and water, this entire cycle is recycled all through the framework. The media-filled type is utilized as a biofilter to eliminate waste or uneaten fish feed in water to establish a sound climate. Therefore soil and mineral manures are not required in hydroponics beds. The particular sensors, such as DHT11, LDR Sensor, Water level Sensor which assists with keeping up the temperature and moistness of plant and water. The sensors likewise assist with keeping up the computerization of light for the plant and pH of water. Microcontroller STM32 F103C8T6 is utilized as it contains inbuilt ADC and this undertaking contains numerous sensors which should be given to ADCs. After all, the framework boundaries are estimated and the separate qualities are shown in LCD which helps in observing when the client is near. With the use of the Internet of Things in an aquaponics framework the upsides of the framework boundaries and data can be shown on the webserver constantly and put away in the information base.

IV. BLOCK DIAGRAM

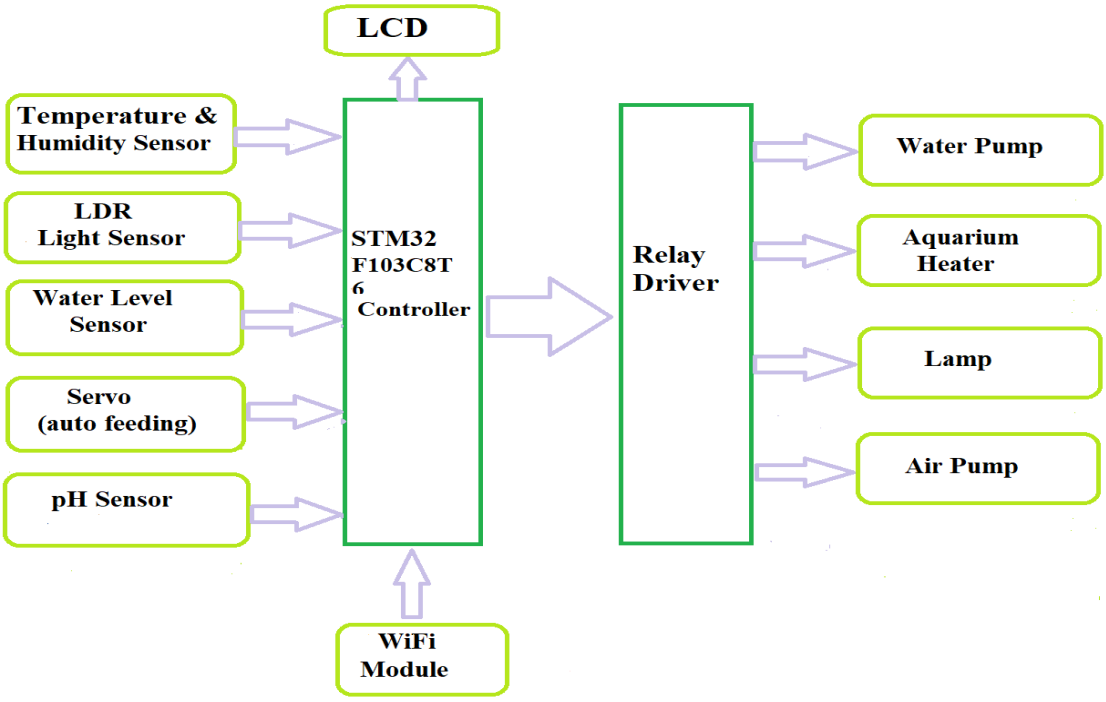

fig 1. block diagram

V. WORKING FLOW DIAGRAM

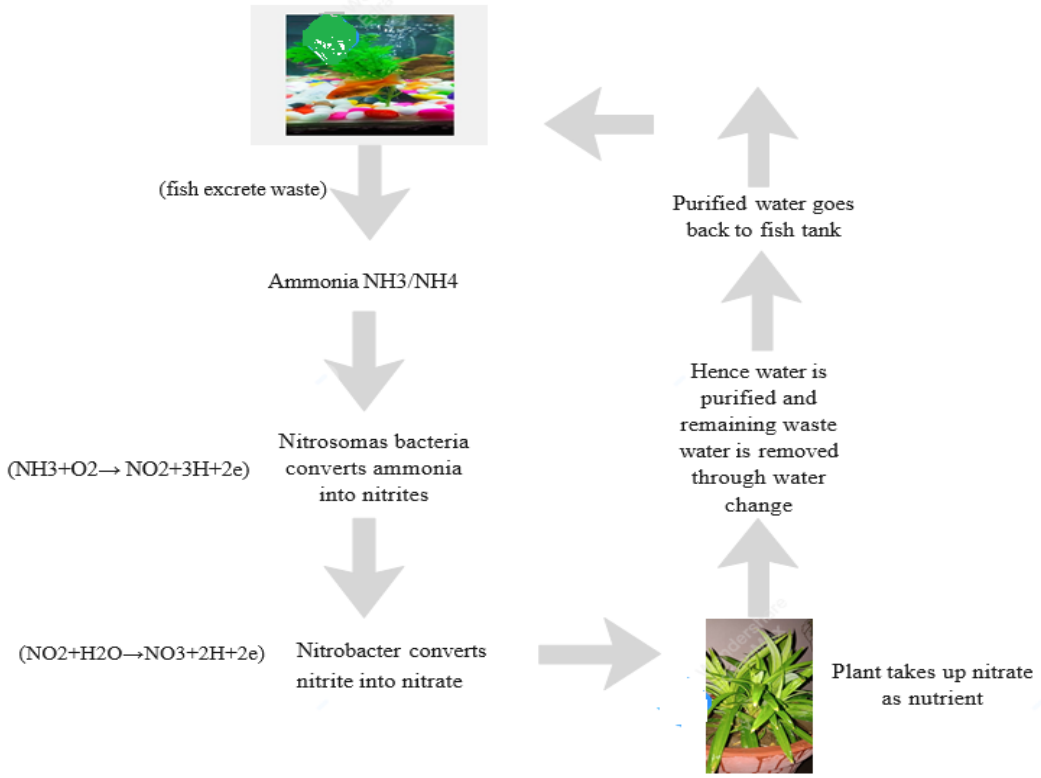

fig 2. work flow

VI. IMPLEMENTATION FLOW CHART

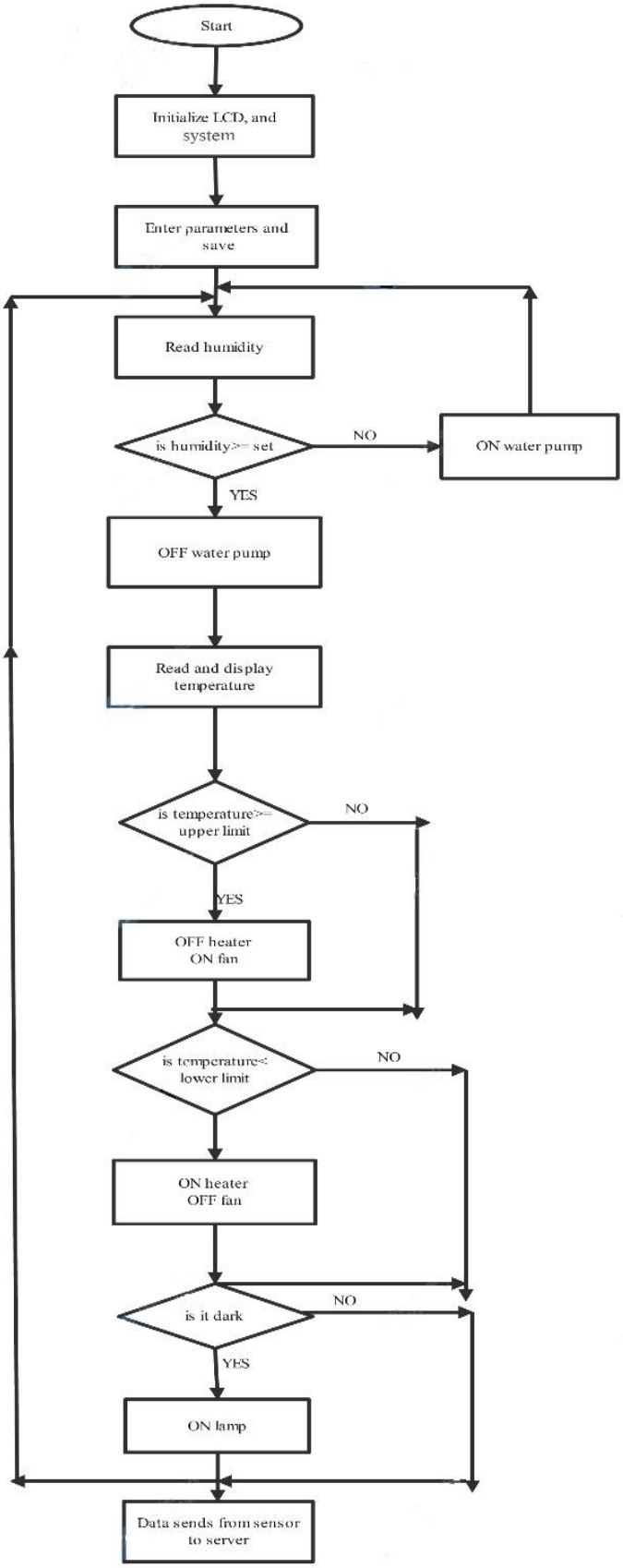

fig 3. flow chart

VII. HARDWARE SPECIFICATION

1. DHT11

The DHT11 is normally utilized for the Temperature and humidity sensor. The sensor accompanies a devoted NTC to quantify temperature and an 8-digit microcontroller to yield the upsides of temperature and mugginess as sequential

information. The sensor is additionally production line aligned and thus simple to interface with other microcontrollers. The sensor can gauge temperature from 0°C to 50°C and mugginess from 20% to 90% with an exactness of ±1°C and ±1%. It is utilized for programmed environment control and climate observing.

2. STM32F103C8T6

The STM32F103C8T6 is a medium density execution line, ARM Cortex-M3 32bit microcontroller in 48 pins LQFP bundle. It consolidates elite RISC centre with 72MHz working frequency, high velocity inserted recollections, the extensive scope of upgraded I/O s, and peripherals associated with two APB buses. The STM32F103C8T6 highlights 12bit ADC, PWM timer, standard, and progressed correspondence interfaces. A thorough arrangement of force saving mode permits the plan of low force applications. It is utilized in the embedded Design and Development, Motor Drive, and Control. It is also used in Portable Devices, Wireless, Industrial, Imaging.

3. Wi-Fi module

ESP 82066 is a Wi-Fi Microchip Integrated with a 32-bit RISC microprocessor, digital peripheral interface antenna switches, and power management module. It comes with 4MB Flash Memory and standby power consumption of 1mV. It has integrated TCP/IP Protocol Stack & produces +19.5dBM output power in 802.11 modes.

VII. IDEAL PARAMETERS AND REQUIREMENTS

1.1 FISHES

- **TILAPIA**

It fills well in water temperatures between 60-80 degrees F and inclines to the 80 degrees F end of the scale, however, they are by and large brought up in temp between 72-74 degrees F to more readily present the plants. It is simple to raise, and they develop up to development quicker than most other refined fish.

- **GOLDFISH**

fig 4. goldfish

The ideal temperature for extreme goldfish is 68° to 74° F. pH isn't essential, yet ideally should be someplace in the scope of 7.0 and 8.4. Quick changes in temperature or water science can be damaging, if not destructive to goldfish.

1.2 PLANTS

- **TOMATO**

fig 5. tomato

Tomato is a warm-season crop. The best natural product tone and quality are acquired at temperature scope of 21-24°C. Temperatures above 32° C unfavorably influence the natural product set and advancement. The plants can't withstand ice and high mugginess.

- **BASIL**

It is otherwise called Sweet Basil. It is a delicate low-developing spice that is developed as an enduring in warm, tropical climates. Basil appreciates a wide pH range between 5.1 (firmly acidic) and 8.5 (basic) with a favored scope of 5.5 (unequivocally acidic) to 6.5 (gently acidic). The basil plant for the most part develops to a tallness of 18 to 24 inches and delivers numerous branches for collection per plant.

IX. RESULT

The existing problems seen in the traditional aquaponics system can be overcome by introducing technical & electronic approaches in the system. It can be observed from the below datasheet that the growth of tomatoes and fish is more in the aquaponics system as compared to the traditional way. Also with this model farmers will be able to monitor their aquaponic farming from anywhere. This system can encourage people to produce organic and healthy plants for daily use or consumption in their household. In this project Temperature sensor, pH sensor, and soil moisture sensor, are interfaced. These values are detected from the microcontroller and are displayed on LCD. With this Farmer can do aquaculture and hydroponics farming together so this will increase efficiency, development and productivity, and profitability.

Data log of pH level , and temperature sensor values :-

DAY	Average pH level	Average temp in Fish tank (°C)	Average temp in grow bed (°C)
1	6.33	25	25
5	6.68	19	19
10	6.8	13	29.44
15	7.1	26	25
20	5.8	21.667	28.5
25	6.9	20	25
30	6.5	19.5	18.33
35	6.5	20	19.67
40	6	21	20.5
45	6.6	22.33	27
50	7	24	26
55	6.7	24.5	22.67
60	6.8	25	26.5

Below graph 1(fig 6) gives the detailed information about pH values, temperature in fish tank and grow bed.

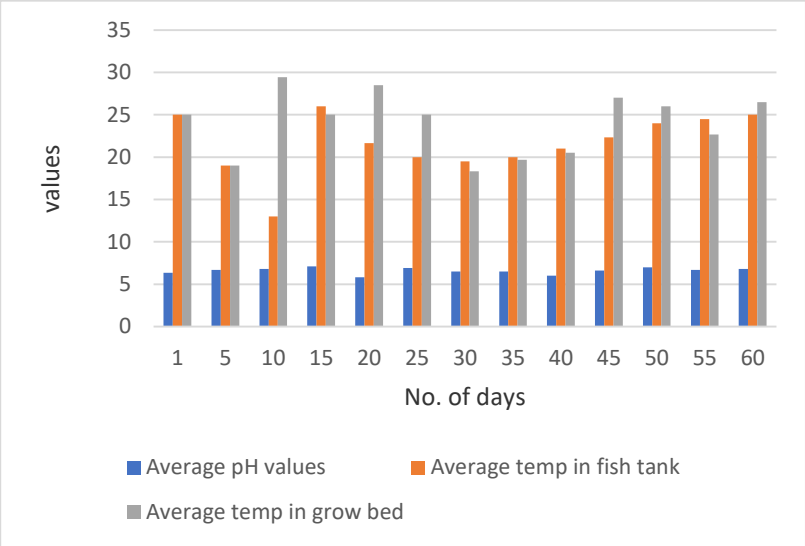

fig 6.

From the survey, we have also observed the growth of goldfish in aquaponics versus traditional fishing and well as the growth of tomato plants in aquaponics versus traditional farming.

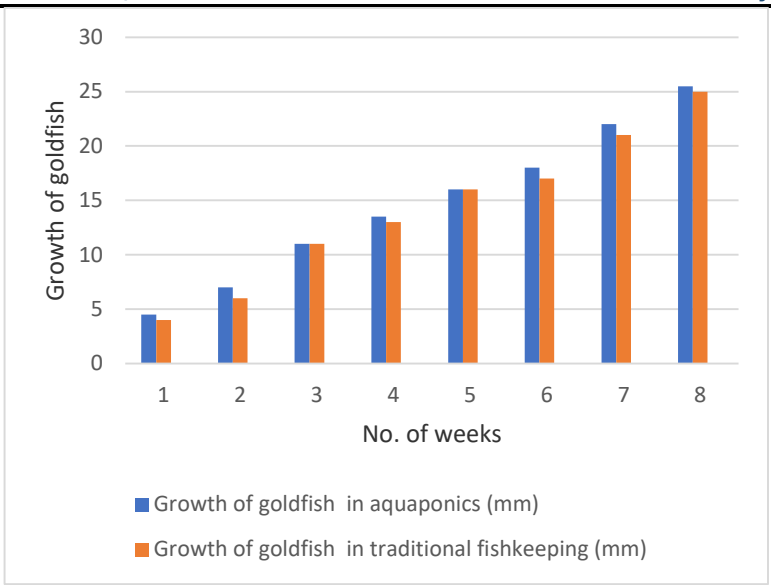

fig 7.

In our project, we have chosen goldfish with tomato as it is more compatible and it is also observed that tomato plants do well in aquaponics than in traditional farming. Just in 8 weeks, we get fruits in aquaponics whereas in the traditional way we need near about 10-12 weeks.

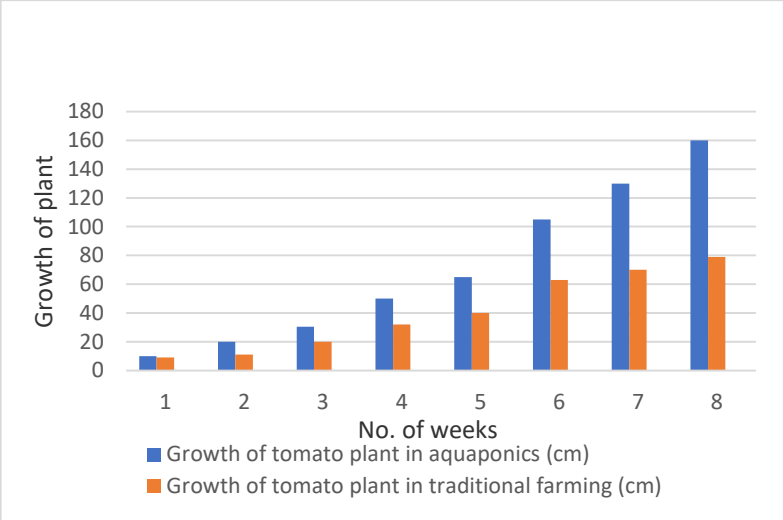

fig 8.

X. CONCLUSION

The aquaponic framework is the best answer for developing natural vegetables at homes in jam-packed urban areas as the space and water prerequisite for this framework is less. It is an eco-accommodating innovation that can be ad-libbed and made energy effective at a person's comfort and an example of utilization. The distribution of water makes the water necessary for development less also, water pay week by week must be made for vanishing misfortunes as it were.

XI. REFERENCES

1. Smart Aquaponics Farming Using IoT & Mobile Computing, International Journal of Advanced Research in Computer and Communication Engineering, Vol. 9, Issue 4, April 2020.
2. J. E. Racoky, "Aquaculture- Aquaponics system," Agricultural Statement Experiment, 2003.
3. IOT BASED AQUAPONICS MONITORING SYSTEM, KEC Conference, September 7, 2018.
4. Watten B. Busch R. Tropical production of tilapia (Sarotherodonaurea) and tomatoes (Lycopersiconesculentum) in a small-scale recirculating water system. Aquaculture 1984; 41(3):271-283.
5. Smart Aquaponics Farming Using IOT, JETIR June 2019, Volume 6, Issue 6.