ELECTRICITY GENERATING SHOES

[1]Mayur Sonawane, [2]Truptesh Jadhav, [3]Jestin Simon, [4]Prashant Meena, [5]Sarang Joshi

[1]Student, [2]Student, [3]Student, [4]Student, [5]Assistant Professor
[1]B. Tech, School of Mechatronics Engineering
[1]Symbiosis Skills and Professional University, Pune, Maharashtra, India

Abstract: The aim of the current study was to generate electricity using Piezoelectric energy. In today's time every person is concerned about efficient energy. In this study, energy is produced using Piezoelectric materials which convert mechanical energy to electrical energy. Certain ceramics, salts, and solids exhibit this effect. In this study, the generated electricity on a specific time will be recorded and determined if it would be enough to completely charge a Li-ion battery or a high capacity capacitor. In recent times the research of wearable energy harvesting has emerged as a new mainstream. Among all of the commercial wearable devices, shoes are the better choice for energy generation.

Index Terms: **Electricity, Piezoelectric energy, Shoes, Battery**

I. INTRODUCTION

As the technology has been developing, the use of power generating wearable devices has been increased. But their battery life is still a bothering thing. Currently, energy generation by Human movement is the most convenient way to power these devices. Many devices including backpack, clothes, insoles are been used to convert human generated mechanical energy to electrical energy. Among all these, shoes are indispensable daily necessity. People generate a huge amount of energy when they walk and collecting energy from the shoes is very simple and effective. Hence the idea of generating power with shoes emerged. By walking energy can be generated and converted into electric energy to charge electronic devices. Energy Generation by shoes can be done by two methods which are Piezoelectric and Electromagnetic.

In this study, an electricity generating shoe is developed. The shoe consists of a circuit which is installed in the insole of the shoe. The circuit's output is connected to a power bank which is installed outside of the shoe. Finally, the shoes are analyzed by using them in different conditions. The results tell us that the developed shoes have great stability and versatility when working and are comfortable as well.

II. DESIGN

The main task of the electricity generating shoes is to produce electricity while the person wearing it is walking. At the same time the person wearing it is comfortable in these shoes. For the making of the circuit, firstly the size and shape of the insole is taken on a Polyvinyl Chloride (PVC) sheet. The thickness of the sheet must be around 2 to 5 mm. The next task is to trace the piezoelectric disks on the PVC sheet. The 'X' in the Following figure is the center where all the pressure is withdrawn.

Fig. 1: Trace of Piezoelectric disks on PVC sheet

The next task is to grind holes on the shaded portion of the PVC sheet. A hand rotary tool can be used to cleanly cut the holes.

Fig. 2: PVC sheet after grinding the holes

The next thing to be done is to glue the piezo discs using contact adhesives. Contact adhesives are used because their rubbery characteristic makes them ideal for this project since they stretch whenever they are bent. Next task is to solder all piezo elements together in parallel. Never solder them in any other way than series as you'll need more current than voltage.

Fig. 3: PVC sheet after soldering

Through this process of experimentation, we realized that even if they are hooked in parallel the piezoelectric elements can still cancel each other's output off (when not actuated simultaneously). Therefore, one bridge diode per piezo disc is added. So the next thing to do is to build a bridge diode. If any mechanical stress is subjected to piezoelectric element it will produce alternating current (AC). Unfortunately, USB devices need DC and not-AC. To filter and convert alternating current to direct current a bridge diode is needed.

Fig. 4: Bridge Diode on PVC sheet

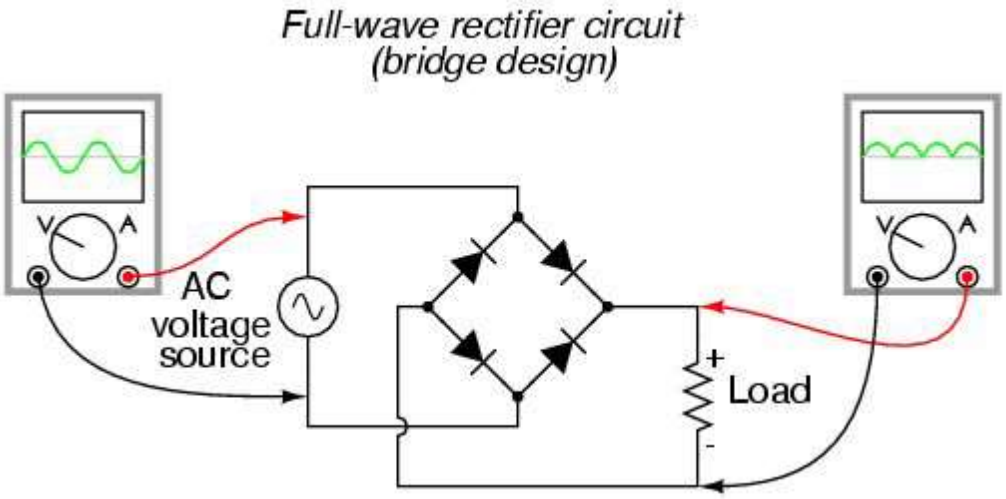

Fig. 5: Circuit Diagram of Bridge Diode

After a bridge diode is added, small pieces of foam are glued on the very center of each piezo disc. These foams will act as pushers. Now checking and observation is done by pressing the foams by a multimeter. Observations can be done in many ways such as pressing by hands, walking, running, etc. After testing and observing, the circuit is put inside the shoe and an insole is put over it. The output of the circuit is brought out of the shoe by wires which are connected to a power bank. The power bank can be installed outside the shoe by glue. For water proofing, the whole circuit and also the power bank can be made water proof by sealing it with a glue gun.

III. MAIN COMPONENTS

1. USB Power Bank

With the increasing demand of battery powered devices, everything from Bluetooth speakers to Mobile phones can be charged by a power bank. Power Banks are very effective and portable. All they require is a USB charging interface. They come in a variety of sizes and shapes to fulfill the requirement of various people and their needs. In the last few years, the use of power banks has been increased as they are very convenient and easy the charge Mobile Phones and other electric devices when away from mains power. Recently, wireless power banks have also been introduced in the market that charges the devices wirelessly. In this particular project, the power bank is used to store the power generated and transfer it as soon as a device is connected to it for charging.

Fig. 6: Power Bank

2. Piezoelectric Transducers

According to Piezoelectricity, on the application of mechanical stress it leads to generation of electric voltage proportional to the applied stress. By the use of measuring devices the generated electricity can be measured to calculate the value of stress applied to the material. With the principle of piezoelectricity, the working of Piezoelectric transducer takes place. The faces of the material are coated with a thin layer of silver which is a conducting material. When stress is applied the ions move far away from each other towards the conducting surface. This results in the generation of charge. Piezoelectric Transducer has the most significant role in this study as it produces electricity when the pressure is applied with the foot while walking or running which is then transferred to the power bank.

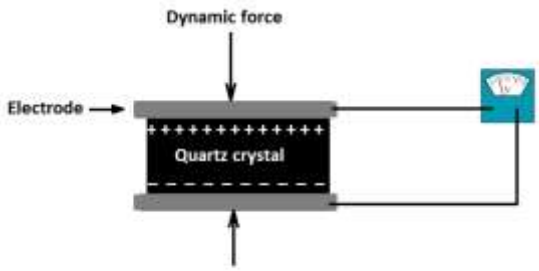

Fig. 7: Piezoelectric Transducer

3. Rectifier Diode

For circuits that need to convert alternating current to direct current, 1N4007 rectifier is designed. It has a peak inverse voltage (PIV) rating of 1000V and can pass currents up to 1A. It allows current flow only in one direction.

Fig. 8: Rectifier Diode 1N4007

IV. POWER GENERATED

To analyze the results, a digital tester was taken and was switched to the 2 digit DC range. The readings were made more readable by adding a 100nF capacitor as the piezoelectric elements produce a short burst of current the moment we push them.

Table 1: Power Produced by Electricity Generating Shoes

Actions	*Volt Meter Displayed*
Pressing by Hand	15.03 volts (20mA)
Walking by Foot	18.53 volts (60mA)
Running by Foot	27.01 volts (100mA)

V. CONCLUSION

In this paper, we have analyzed an alternative renewable energy resource. In today's challenging times, where the problem of energy generation is rising, electricity generating shoes are the effective way of generating power. At places of less or no power, these shoes are useful to all and also the cost is comparatively low. The assembly is easy and maintainable. It is the best solution of the problem regarding power. Further, walking for some time is going to burn calories and make the individual healthy if done regularly as well as produce electricity and use for household purpose.

VI. REFERENCES

[1] Energy harvesting with the piezoelectric material integrated shoe
Author: Anil Can Turkmen, Cenk Celik
Published by: Science Direct
https://doi.org/10.1016/j.energy.2017.12.159

[2] Generating Electricity while walking with Loads
Author: Lawrence C. Rome, Louis Flynn, Evan M. Goldman, Taeseung D. Yoo
Published by: American Association for the Advancement of Science
https://doi.org/10.1126/science.1111063

[3] Optimum Piezoelectric Bending Beam Structures for Energy Harvesting using Shoe Inserts
Author: Loreto Mateu, Francesc Moll
Published by: SAGE journals
https://doi.org/10.1177/1045389X05055280
[4] Force Analysis and Energy Harvesting for Innovative Multi-functional Shoes
Author: Borui Xu, Yang Li
Published by: Frontiers
https://doi.org/10.3389/fmats.2019.00221

[5] Piezoelectric Energy Harvesting via Shoe Sole
Author: Ashish Gupta, Asharfilal Sharma
Published by: International Journal of New Technology and Research (IJNTR)
https://www.ijntr.org/download_data/IJNTR01060010.pdf