"Intelligent Based Design And Development of Overhead Water Tank Cleaning Machine"

[1]Akshay Sawansukha,[2]Aniket Humane,[3]Himanshu Bhute, [4]Prajwal fating, [5]Priyal Bobhate, [6]Sandip Raghorte, [7] Dr. V.G Arajpure**

1st, 2nd, 3rd,4th,5th,6th,*Students, Dept. of Mechanical Engineering*
7th Principal, Suryodaya College of Engineering & Technology, Nagpur
[1]Suryodaya College of Engineering & Technology, Nagpur, India

Abstract: Water is one of those natural resources, which is essential to each and every human being for many purposes, especially for drinking. We already know that earth is composed of water (three-fourth of the earth), but the entire three fourth isn't fresh water. Therefore, it is our duty to save water, keep the fresh water as fresher as possible, and also to keep it free from water pollutants. The water that's pumped to our home is undoubtedly clean, but is the place where it gets stored clean as well? Yes, we are talking about the overhead water tanks. The health of your water largely depends on how clean your water tank is. Hence, cleaning overhead water tank is very necessary. Our aim of this project is to develop a mechanical system for cleaning domestic cylindrical water tank. The mechanical system includes motor, Submersible water pump and C-type mechanisms with brushes. The C-type mechanism is adjusted according to the dimensions of the tank, once adjusted the machine is switched ON, the motor draws power from the electric supply and rotates the shaft with low RPM and high torque, the brushes mounted on the C-type mechanism starts scrubbing the inner walls of the tank.

***Index Terms* - Cylindrical water tank, C-type mechanism, motor shaft, Pump, Microprocessor.**

I. INTRODUCTION

Cleaning is the process of removing unwanted substance, such as dirt, infectious agents and other impurities from an object or environment. Water is one of those natural resources which is essential to each an every human being in there day to day life for many purpose and especially for drinking. We already know that 21% of entire water is fresh water which is used for human necessity therefore it is our responsibility that we should save water and keep it clean as much as possible and also prevent it from being polluted. As of know we are seeing that groundwater level is dipping every year and lot of algae and metallic elements get precipitate out and get sticks to water tanks. This can eventually block the pipes and result in accident.

In recent searches in India it has been found that the use of tank by general population is about 71% after the examinations have made data that have faced a significant amount of problems, such as persistent work in disordered places, sporadic delivery and different reasons. Constant work and unpredictable installation can also be the important purpose behind this effort. So, we came to the conclusion that cleaning the upper tank using the mechanization process can be invaluable for tackling each of these problems.

Water tanks are liquid storage containers these tanks are usually use for storing water for human consumption. A water tan provides for the storage of drinking water, agriculture farming and livestock, chemical manufacturing, food preparations as well as many other possible solutions. Water storage tanks must be maintained so that the quality of water in the tank is clean. Because of contaminated water can lead to diseases that can harm consumers unscheduled tank cleaning will affect the health of users.

In recent research it has been found that no automation-based machine used in cleaning of overhead water tank. This is because of the irregular shape and various heights of the tank locations. With previous survey made an attempt to make a machine by automation process for cleaning tank.

Every day we use tank water for brushing and bathing, for cleaning and moping, for washing clothes and in other household chores. With the passage of time, sediments scale and algae get deposited on the walls, ceiling and also to the floor of the tank. The deposition contaminates the water and make unfit for use. With time algae and bacteria grow and breed in this water and it starts infecting it which could make us fall sick eventually. Hence water tank cleaning is very important.

II. NECESSITY OF CLEANING WATER TANKS:

Every day we use the tank water for brushing and bathing, for cleaning and moping, for washing clothes and in other household chores. With the passage of time, sediments scale and algae get deposited on the walls, ceiling and floor of the water tank. This deposition contaminates the water and makes is unfit for use. With time algae and bacteria grow and breed in this water infect it and could make us fall sick eventually. Hence water tank cleaning is very important. By using contaminated water it make us unhealthy and cause sick for us. In order to avoid this, we want use clean water. In most of the house we were using overhead tanks like San tech and syntax. In this project we have designed a mechanical system to clean the cylindrical overhead water tank cleaner.

III. REASONS FOR CLEANING WATER TANKS:

If you need to know some more important reasons to clean your water tank, then here are the six main reasons why cleaning your water tank is necessary.

1) **Waterborne Internal Diseases:** If you keep your water tanks unclean for years, there are high chances that the water will get contaminated by many bacteria or virus. And if your tank water gets contaminated by harmful bacteria and virus, then there is a high chance for you to get sick along with your family. Internal water-borne diseases such as diarrhea, typhoid and cholera are the most common type of diseases in India, that's caused by contaminated water. Usually, this happens in the case of drinking contaminated water from outside; but still, if your water tank remains untidy then these diseases can hit you through your overhead tank. Sometimes, malaria is also caused through water; therefore, keep the lid of your tank shut, so that mosquitoes can't breed there. This is the very first reason why cleaning overhead water tank once or twice a year make sense.
2) **Skin Diseases:** Why just internal diseases, contaminated water can also cause skin diseases. It is obvious that you wouldn't be using your tank water just for drinking right? You will bathe with it and also wash your clothes and utensils. Therefore, while you keep in touch with such contaminated water, you can definitely be attacked by some skin diseases. You must know that hard water ruins your hair, right? Similarly, if your water contaminated by some toxic matter or some germs, don't you think it will harm your skin? Of course, it will! Don't think just ground water can cause skin diseases, an unclean tank may also result in contamination of water. But you could easily avoid such skin diseases by cleaning overhead water tank every 6 months.
3) **Foul Odor:** If you water is unclean for ages, then it is obvious that it is going to smell as foul as drain water. This is the result of residues and sediments that is mixed in your drinking water. Sometimes foul odor in the water may not be harmful to your health, but you may not be able to drink it because of its foul smell.
4) **Bad Taste:** Usually, it is the iron content in the water that gives you a metallic taste, and you would also see the color is slightly rusty or reddish. But if you taste something completely different than the metallic taste then this could also be the result of sediments mixed with the tank water. Therefore, cleaning your water tank is necessary. And in any way, you cannot drink water that tastes bad.
5) **Different Color:** If you find your water to be rusty in color and is staining your glass as well, then don't worry it's a case of iron content in water, that isn't harmful at all, in fact, it improves oxygen circulation in blood. But if you find some tiny sediment dissolved in water, or water that is foul collared then you might need to stop using it immediately and test it, and then take essential steps. If your tank is dirty, it can dissolve few particles; but if the water color is extremely different, the water cleaning is necessary.
6) **Helps reduce maintenance cost:** *'Maintenance is always better than cure'* is a common guideline in the handbook of any home-maintenance solutions provider and is a notion we strongly believe should apply to everyone who owns a water tank. If disease is not a good enough incentive to convince you to clean your water tank, we are hoping that the principles of economics will. Periodic maintenance of your water tank is much more cost-effective than expensive last-minute repair work. Regular upkeep of your water tank ensures that your water tank provides you with clean water at all times and is functioning at optimum levels.

IV. LITERATURE REVIEW

The literature survey has been done in two ways i.e. studied in different papers published in national & international conferences & journals as well as we have gone through different books and website for water tank cleaning purpose. The details of different mechanism and machine developed have been elaborated below.

- **Shubham Shrivastav, Hari Om Kumar (2016) Design Design and Development of Cylindrical Water tank cleaner** In this work they design mechanical system consists of two main mechanisms which arc gear mechanism and reciprocating four bar linkage mechanism. The gear used is worm gear which is used to reciprocate whole mechanical system up and down according to the height of cylindrical tank. Four-bar attach to the main shaft and its other end is attached to pvc brushes. Four bar linkage is designed in such a way that it adjust according to inside diameter of the tank. When the a.c motor is switch on the main shaft rotate in turn the linkage rotates and with the help of brushes, the wall and bottom of tanks gets cleaned. He concludes that overhead water tanks cleaning equipment's was conceived and developed. This equipment was found to be effective in cleaning cylindrical overhead tanks. During cleaning the rotating brush needs to move up and down manually for complete cleaning with the help of rotating handle of worm gear. The cleaning is carried out by rotating brushes at constant speed (120rpm).

- **Thonge Suraj,Shelke Prasad,Wakte Vaibhav ,Thonge Sharad ,Prof. Shinde,(2017)** explains a mechanical system which clean the tank mechanically using brush, rack and pinion, bar linkage and motor. They claimed that the Cleaning is done more effective than the conventional methods. They also observed that the adjustment of the system inside the tank is difficult.
- **Ashwin chander ,g.siddharth ,e.krishna kanth ,kevein shadrack ,p vetriverzhan (2019)** design and fabrication of water tank cleaning machine. Design and development of a machinery for cleaning domestic rectangular water tanks.the system consist of a machine designed with a movable body & an extendable shaft . Mechanism supporting a rotating brush ,the movement of shaft & brush scrubs the walls of the tank . Sprinkler mechanism ruiness the sediment deposits from walls of the tank & additionally a vaccume device ingests the sludge from the floor of the tank .shaft is rotated at a speed of 100 rpm.it is also found to be heavy in weight
- **Mahadev Chavan, Dr. R. J. Patil, Prof. Pankaj Bhokare, Vol. 15, Issue No. 9, October-2018, Design of Automatic Water Tank Cleaning: Machine using Catia Software.**The water tank cleaner is used to clean the water tanks by using rotating brushes. This method was cautious than the conventional methods. It is also found that the mechanism is small but the supporting construction which is holding the mechanism is very large that's why the hole assembly is very big in size.
- **Yogesh kumar s r, naveen kumar r a, gowtham naik t, venkatesh a, hanumantharaya r u g student, assistant professor, volume 11, issue 6, june-2020, fabrication of water tank cleaning machine**.the water tank cleaner is used to clean the water tanks by using rotating brushes. For cleaning, there is a water nozzle this used to spray water or soap water to the inner walls of the tank, but there is not any system to pumped out the dirty water.

V. PROBLEM STATEMENT

- This section presents the formulation of the identified problem, which based representation of an overhead water tank cleaning system. All the reviews on theoretic approaches involve the same common terminologies .The problem of cleaning the water tank by the conventional can be formulated as:

- All methods of cleaning water tank as discussed above are time consuming and require more human efforts. So the alternate method is required for cleaning purpose which will overcome the drawbacks of all other methods. Therefore, we are developing water tank cleaning equipment which requires less time and less human efforts for cleaning the water tank. The major drawbacks of the existing machines are: -

  - Too large.
  - Occupy huge area.
  - Too costly.
  - Require many people to operate.
  - Need of separate machines for taking out water from tank.
  - Heavy in weight.

- So, In recent studies it has been found that no automation based machine used in cleaning of overhead tank. This is because of the irregular shape and various heights of the tank locations. With previous survey made an attempt to make a machine by automation process for cleaning tank. An alternate solution has made a plan to solve this problem. In India, the usage of sintex tanks by the people is approximately 71%. After studies made the information that have faced a lot of difficulties like continuous work in the dirty places, irregular payment and other various reasons. Continuous work and irregular payment may also be the major reason for this attempt. So came to a conclusion that cleaning the overhead tank using automation process can be useful to solve all these problems.

VI. DESCRIPTION OF MECHANICAL COMPONENTS

1. Water Tank

Water tanks are used to provide storage of water for use in many applications, drinking water, irrigation agriculture, fire suppression, agricultural farming, both for plants and livestock, chemical manufacturing, food preparation as well as many other uses. Water tank parameters include the general design of the tank, and choice of construction materials, linings. Various materials are used for making a water tank: plastics (polyethylene, polypropylene), fiberglass, concrete, stone, steel (welded or bolted, carbon, or stainless). Earthen pots, such as matki used in South Asia, can also be used for water storage. Water tanks are an efficient way to help developing countries to store clean water.(Diameter = 800 MM, Height = 600 MM, Man hole diameter = 300 MM & Capacity of tank = 200 to 300 liters).

2. Motor

The AC motor commonly consists of two basic parts, an outside stator having coils supplied with alternating current to produce a rotating magnetic field, and an inside rotor attached to the output shaft producing a second rotating magnetic field. This motor will be mainly used for rotation of shaft and rod of the brush and the motor we will be using will be of 105 watts.

3. Suction motor pump

A pump is a mechanical device that is used to pick up water from low-pressure level to high-pressure level. Because of low force at suction part of the pump, the liquid will pick up from certain deepness, while at expulsion side of the pump with high force, it will drive liquid to pick up until reach preferred height. The suction motor we will be using is of 0.5 H.P to 1 H.P (Horse Power) and it is use to drain dirty water after cleaning.

4. Coupling

A coupling is a device used to connect two shafts together at their ends for the purpose of transmitting power. The primary purpose of couplings is to join two pieces of rotating equipment while permitting some degree of misalignment or end movement or both. In this assembly we are using coupling for connecting motor shaft to the C-type connecting rod brush to rotate and clean the surface of wall tank.

5. Submersible Water Pump

A pump is a device that moves fluids (liquids or gases), or sometimes slurries, by mechanical action. Pumps can be classified into three major groups according to the method they use to move the fluid: direct lift, displacement, and gravity pumps. In this assembly we are using submersible water pump for sprinkling water on the walls of tank.

6. Brush

A brush is a common tool with bristles, wire or other filaments. It generally consists of a handle or block to which filaments are affixed in either a parallel or perpendicular orientation, depending on the way the brush is to be gripped during use. The material of both the block and bristles or filaments is chosen to withstand hazards of its intended use, such as corrosive chemicals, heat or abrasion. The brushes are made up of poly vinyl chloride (PVC) polymer & in assembly this brushers are attached to the C-type rod which revolve due to the rotation of shaft and which helps to clean the inner surface of tank.

7. Microcontroller

NodeMCU is an open-source Lua based firmware and development board specially targeted for IoT based Applications. It_ includes firmware that runs on the ESP8266 Wi-Fi SoC from Espressif Systems, and hardware which is based on the ESP-12 module. The NodeMCU ESP8266 development board comes with the ESP-12E module containing ESP8266 chip having Tensilica Xtensa 32-bit LX106 RISC microprocessor. This microprocessor supports RTOS and operates at 80MHz to 160 MHz adjustable clock frequency. NodeMCU has 128 KB RAM and 4MB of Flash memory to store data and programs. Its high processing power with in-built Wi-Fi / Bluetooth and Deep Sleep Operating features make it ideal for IoT projects.NodeMCU can be powered using Micro USB jack and VIN pin (External Supply Pin). It supports UART, SPI, and I2C interface.

VII. METHODOLOGY

Firstly the whole mechanical system is inserted to the tank through man hole in retract position, this is done manually (Opening diameter of tank is smaller than diameter of tank). After this Lubricant is sprayed throughout the inner wall & bottom of tank for easy cleaning with help of pipe which is attached to submersible water pump. Initially the base of the system should touch the bottom of the tank. Switch ON the motor. As the motor starts, the main shaft will start rotating in turn the C-type foldable rod also starts rotating. The brushes attached to the edge of C-type rod will start cleaning the inside wall and bottom of the tank. After the cleaning is done switch off the motor and we remove the assembly from the tank. Then with the help of suction pump we take out

all the dirty water present in the tank. After that we spray antibacterial solution which is effective in purifying water against all micro-organisms, including bacteria, bacterial spores, fungi, viruses, etc. In such a way the tank gets easily cleaned by using this automated cleaning system.

VIII. CONSTRUCTION & WORKING

- The automatic water tank cleaning machine consists of shaft, brush, motors, submersible water pump and coupling.
- Electric motor is connected with rack and clamp and it is used for providing the fix support between water tank and cleaning mechanism.
- Then the net power required is transferred from that motor and then suction pump is also used to take out all the dirty water present in the tank.
- The assembly also consist of microcontroller with relay-NodeMCU.
- Relay is used to control ON/OFF switches of motors & it is used for automation like it will be directly connected with Google assistant of your phone with the help of IOT application.
- The assembly also consist of rotating shaft which is used to rotate the C-type cleaning mechanism.
- Working of the tank cleaning machine is based on the principle of motion in which electric motor is used for generating the power and transmit it.
- After assembling the mechanism we have to adjust the cleaning mechanism properly inside the tank.
- Then after all the assembling is done switch on the electric motor.

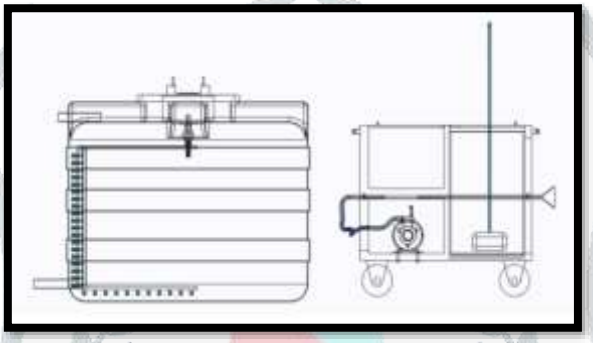

Figure: Wire frame assembly of overhead water tank cleaning machine.

- Then after switching on the rotating shaft get started to rotate in clockwise direction with the cleaning mechanism.
- In such a way the cleaning mechanism starts cleaning the inner side of the tank with the help of C-type brush and at the same time we will spray the detergent also from the nozzle of cleaning mechanism for more effective cleaning of tank walls.
- Then after this by switching off we remove all the assembly from the tank.

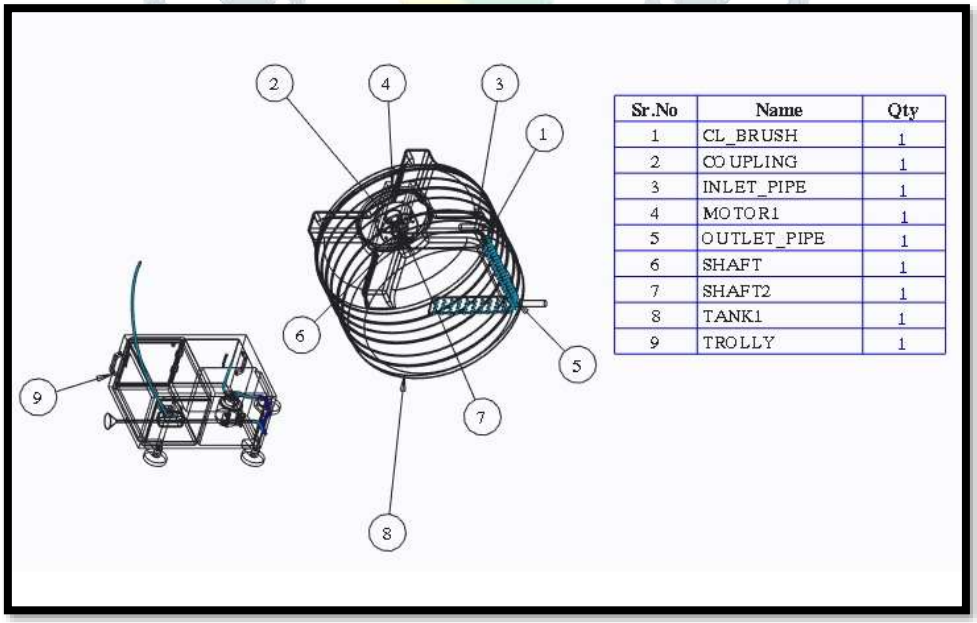

Sr.No	Name	Qty
1	CL_BRUSH	1
2	COUPLING	1
3	INLET_PIPE	1
4	MOTOR1	1
5	OUTLET_PIPE	1
6	SHAFT	1
7	SHAFT2	1
8	TANK1	1
9	TROLLY	1

Figure: Actual Model of "Intelligent Based Design & Development of Overhead Water Tank Cleaning Machine"

- Then after removing the assembly we use suction pump for removing the dirty water present inside the tank.
- After that we spray antibacterial solution which is effective in purifying water against all micro-organisms, including bacteria, bacterial spores, fungi, viruses, etc.
- In such a way the tank gets easily cleaned by using this automated cleaning system.

IX. DESIGN & DEVELOPMENT OF OVERHEAD WATER TANK CLEANING MACHINE:

3D Model & Wire frame model of the prototype has been made with the PTC CREO Parametric 3.0 version software's. An automated tank cleaning machine is a machine used to clean the overhead tanks such those found to store the water. Tanks must be cleaned from time to time for various reasons. Design & development of overhead water tank cleaning machine consist of various designs of machine.

Figure: 3D Model of "Intelligent Based Design & Development 0f Overhead Water Tank Cleaning Machine"

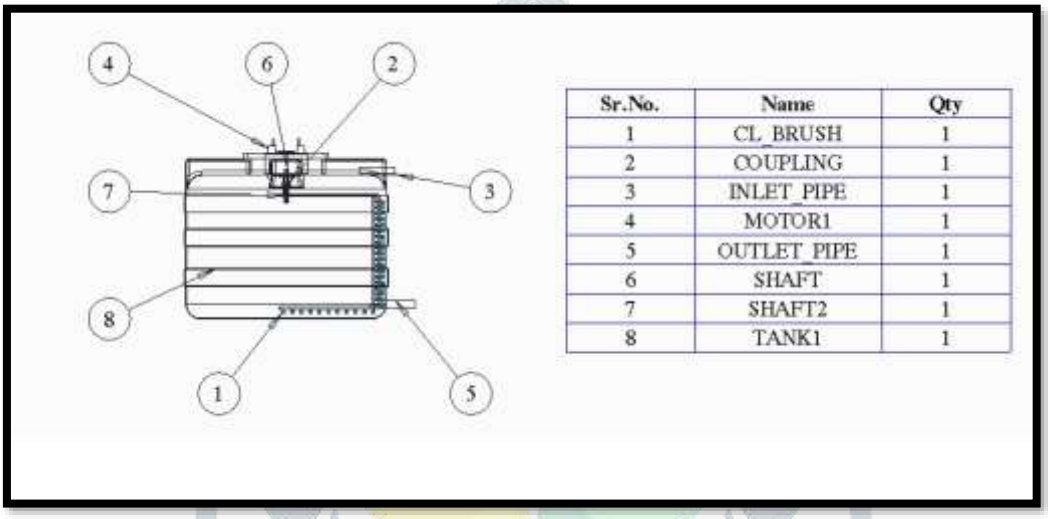

Sr.No.	Name	Qty
1	CL_BRUSH	1
2	COUPLING	1
3	INLET_PIPE	1
4	MOTOR1	1
5	OUTLET_PIPE	1
6	SHAFT	1
7	SHAFT2	1
8	TANK1	1

Figure: Assembly of Components

The above figure consists of assembly of components used in overhead water tank cleaning machine. And in figure it is also shown that how the assembly will be arranged inside the overhead water tank for cleaning the tank.

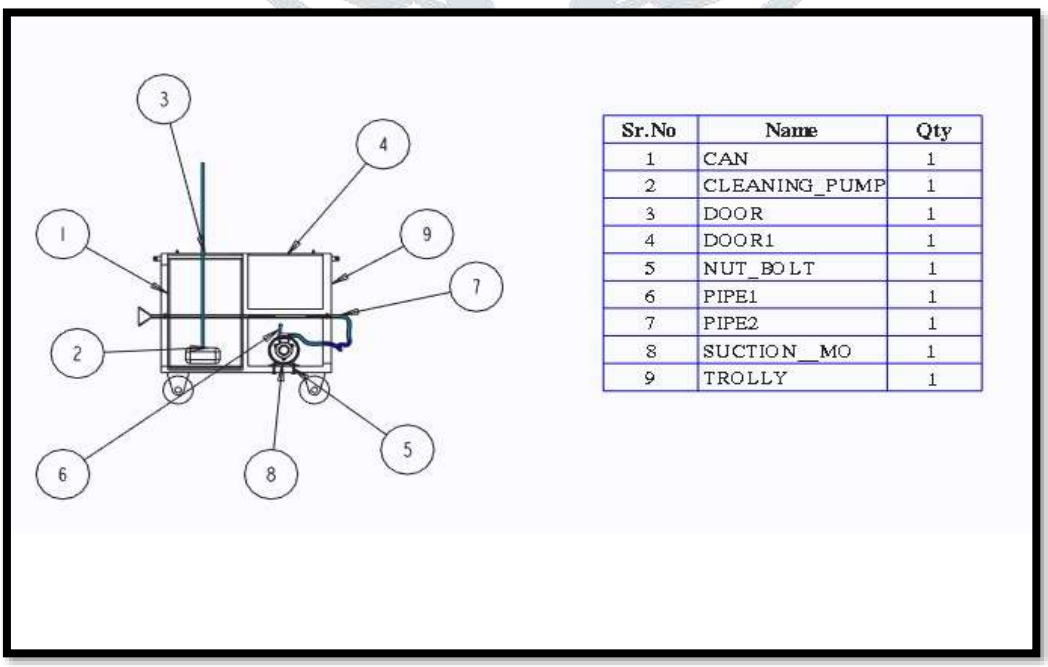

Sr.No	Name	Qty
1	CAN	1
2	CLEANING_PUMP	1
3	DOOR	1
4	DOOR1	1
5	NUT_BOLT	1
6	PIPE1	1
7	PIPE2	1
8	SUCTION_MO	1
9	TROLLY	1

Figure: Assembly of Trolley

X. POTENTIAL IMPACT

At present, no automatic tank cleaning machine is available in market. Tank cleaning is a major problem in cities where water has higher TDS so cleaning is mandatory. It is smart system hence; it does not require any careful inspection or any skilled person. After cleaning of tank anti bacterial spray is sprayed for avoiding micro-organisms on water.

XI. FUTURE SCOPE

This system is user friendly and time saving also the cost is less hence it can be used in the future for water tank cleaning purpose. The system could be more compact and lighter weighted and more users friendly and efficient by improvement in the design and using some other advance equipment. In future we can also add the system which can send us the message on our mobile phones that tank is cleaned using internet of things technology.

XII. CONCLUSION

The water tank cleaner is used to clean the water tanks by using rotating brushes. This method is more effective and safer than the conventional methods. This method is capable to clean water tanks within less time and human efforts advanced model for tank cleaning system is cleaning the tanks thus making the operation user friendly. The working prototype is promising both in terms of imparting cleanliness and avoiding excess manpower. The future scope of the project is to extend it with auto feeding mechanism by which the manpower involved in feeding gets removed. Through the help of the auto feed mechanism, it is easy to clean the tanks without excess man.

XIII. REFERENCES

- Thonge Suraj, “Water Tank Cleaning Machine” International Research Journal of Engineering and Technology (IRJET) Volume: 04 Issue: 02 | Feb -2017
- Dr. R. K. Bansal, “Kinematics of machine”, Laxmi Publications (P) Ltd ., vol. 1, no. 4, pp. 23-287,Nov. 2011.
- Shubham Shrivastav, Hari Om Kumar, “Design and Development of Cylindrical Water tank cleaner”, IEEE Trans. Commun.,vol. 6, no. 1, pp. 1-7,Feb.2016.
- J.B.K Das and P.L.Srinivasanmurthy,Design of machine elements 1,Sapna Book House(P)Ltd,(2012).
- 2.Prof. Shinde R.S, Automatic Water Tank Cleaning Machine, Irjet, P-Issn: 2395-0072, Vol-4, Pp 1674-1676
- S. Abhishek, D. Kiran, P. Praveen And Dr. K. L. Senthil Kumar, Design And Fabrication Of Automatic System Overhead Tank Cleaning, Ciit International Journal Of Automation And Autonomous System, Vol 9, No 4, April 2017.