IMPLEMENTATION OF TEMPERATURE BASED REAL TIME SPEED CONTROLLING OF A PMDC MOTOR FOR COOLING FANS APPLICATION

[1]Varun Namdeo ,[2] Shivendra Singh Thakur, [3]C.S.sharma
[1]M.E. Scholar,[2]Associate Professor & [3] HOD of EE Department.
Department of Electrical Engineering ,Samrat Ashok Technological Institute, Vidisha (MP),INDIA

Abstract- Nowadays from industrial application till to consumer application automation is the most popular technique is used. This paper presents "implementation of temperature based real time speed controlling of a PMDC motor for cooling fans application". Cooling fans, Air conditioner, AC machines and in many applications PMDC motor is used. In order to implement the system Arduino uno controller is used, which is program through Arduino IDE software. LM35 temperature sensor is use for temperature sensing and another sensor is IR obstacle sensor, which is use for speed measurement of PMDC motor. PWM technique is used for speed variation of PMDC motor. The system will detect the temperature and send the reading to the ARDUINO UNO controller then it will generate PWM signals to motor control then the motor accelerating, decelerating and turning, its operating parameters can be obtained through the measurement module and displayed on LCD. Experiment proved that the system has high stability, and it can meet the needs of DC motor speed regulation.

Keyword- Arduino Uno, Temperature Sensor, Pulse Width Modulation, Pmdc Motor, Speed Regulation.

1:-INTRODUCTION

DC motor converts dc power into mechanical power. It operates when a current carrying conductor is placed in a magnetic field, the conductor experiences a mechanical force. DC motor is used when variations in speed are needed. Simple method for controlling the speed of DC motors is to add series resistance using a rheostat . As considerable power is consumed in the rheostat, this method is not economical. Another method is to use a series switch that can be closed or opened rapidly. This type of control is termed as chopper control . PWM is a commonly used technique for controlling power to inertial electrical devices, made practical by modern electronic power switches . Duty cycle describes the proportion of 'on' time to the regular interval or 'period' of time; a low duty cycle corresponds to low power. Most of the electronic devices available in the market need to be automated for the use of daily life. For example CPU in personal computer, Air conditioners etc... Need to be operated in a temperature controlled environment. In this method the motor speed is controlled automatically by variation in temperature. This method can be used in some industrial applications in order to maintain a constant temperature working environment. This helps the machines from damaging by reducing the temperature. Motor speed can be automatically controlled by using different methods. Since motor speed need to be varied with temperature variation, this can be achieved by Arduino uno microcontroller , The system will detect the temperature by using LM35 sensor then send the reading to the ARDUINO UNO controller then it will generate PWM signals to motor control then the motor accelerating, decelerating .Temperature , PWM cycle value and speed of the PMDCmotor displayed on the 16x2 lcd display .

1.1. DC motor Permanent magnet

The working principle of the direct current motor is to reverse the voltage signal that has positive and negative value using a commutator, thus the current reversing with the coil of the anchor that rotates in the magnetic field. The simplest form of the motor has a coil in which current can rotate freely between the permanent magnetic poles. Various types of DC motors that operate on electromagnetic principles currently was used widely. Of these, permanent magnet DC motors have extraordinary characteristics to be used as actuators in automatic equipment. Figure 1 shows the basic structure of permanent magnet DC motors. It is consists of two permanent magnets and an iron house, forming the stator part. The rotor is the rotating part of the motor. The stator is the stationary part of the motor that creates a magnetic flux and then creates torque.

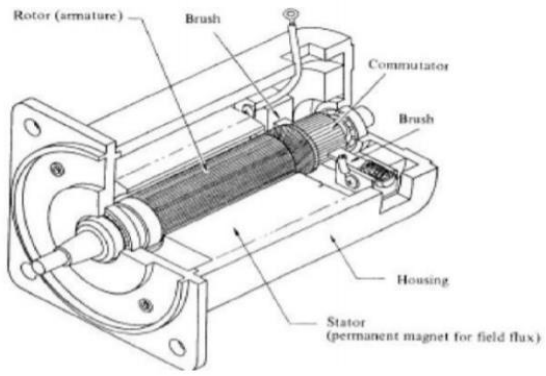

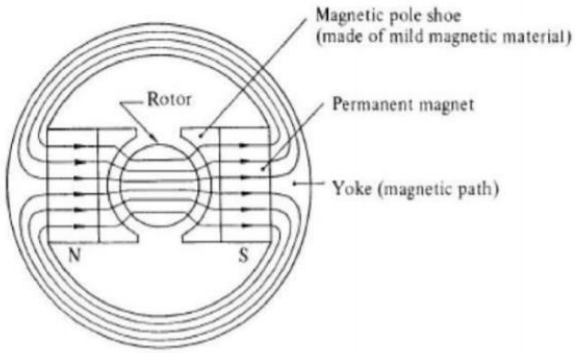

Figure 1.

Permanent magnet DC motor. Figure 2. Round field flux system.

The armature of the DC permanent magnet motor is shown in Figure 2. It is part of the current carrying motor, which interacts with field flux to create torque. The brush is part of the circuit where the electric current flows to the motor from the power supply — brushes made of graphite or metal. DC motors have one or more pairs of brushes. One brush is connected to the positive terminal from the power supply, and the other to negative. The commutator is the part that comes into contact with the brush, which is distributed in armature rolls using brushes and commutators.

1.2. PWM (Pulse Width Modulation)

One method that is often used for DC motor control using a microcontroller is Pulse Width Modulation (PWM) method. The speed of the electric motor depends on the modulator voltage. The greater the voltage, the faster the rotation of an electric motor. PWM is a good technique for controlling analog circuits of the motor drive with digital outputs from a microcontroller. From Figure 3, if the source voltage (Vs) reaches 12 V, then the duty cycle of 20% above PWM output is 2.4 V. Likewise, the 50% duty cycle output of PWM is 6 V, and on duty 80% cycle PWM output is 9.6 V. This means that using a microcontroller output of 5 V, an analog circuit that requires a voltage source of more than 5 V can be controlled using the PWM principle. The use of this PWM can be used to control motor rotation through changes in PWM duty cycle or PWM pulse width. When the duty cycle is 0%, the motor will stop completely because there is no voltage difference.

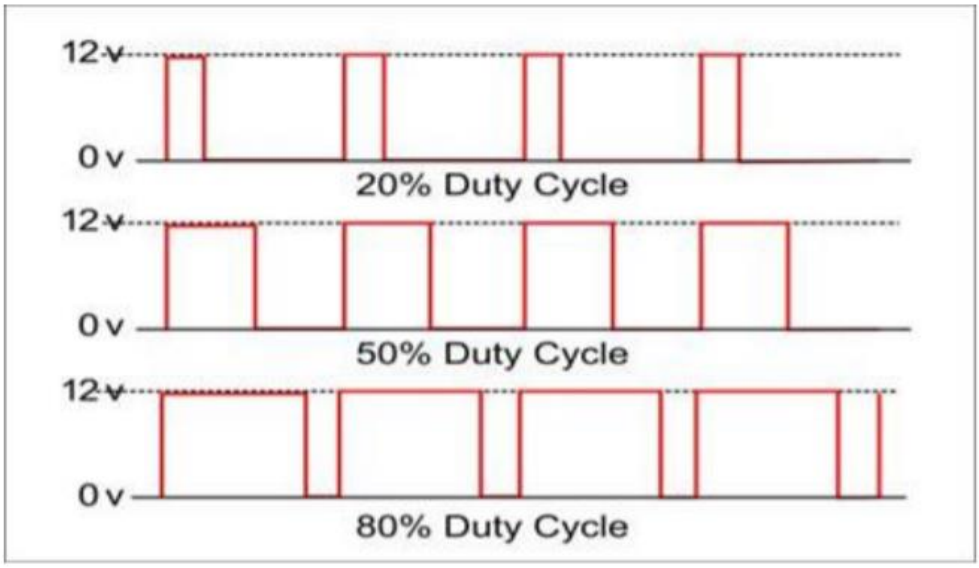

Figure 3. Duty Cycle.

When the duty cycle is 50%, the motor will rotate at half the speed of the maximum speed because the voltage is half the full voltage. When PWM is in 100% condition, the motor rotates with maximum speed because of the continuous output of PWM.

2. RELATED WORKS

A reasonable number of works have found in the literature, regarding the employment of solid-state devices for the control of dc drives. The paper of Kurnera, Dayananda and Jayawikrama, elucidated the use of chopper in collaboration to PC for the control of dc motor speed. Software was developed, fed into a PC and consequently, commands were given to the chopper via the computer for control of motor speed [3].The use of standalone micro controller for the speed control of DC motor is past gaining ground. Nicolai and Castgnct have shown in their paper how a microcontroller can be used for speed control. The operation of the system can be summarized as: the drive form rectified voltage; it consists of chopper driven by a PWM signal generated from a microcontroller unit (MCU). The motor voltage control is achieved by measuring the rectified mains voltage with the analog to-digital converter present other micro controller and adjusting the PWM signal duty cycle accordingly [5]. Another system that uses a microprocessor is reported in the work of khoel and Hadidi a brief description of the system is as follows: The microprocessors computes the actual speed of the motor by sensing the terminal voltage and the current, it then compares the actual speed of the motor with the reference speed and generates a suitable signal control signal which is fed into the triggering unit. This unit drives an Hbridge Power

MOSFET amplifier, which in turn supplies a PWM voltage to the DC motor [6]. In this paper, a dc motor with fixed speed control system is presented, which has high precision, reliability and adaptability for different motor ratings with good speed response.

In order to implement the speed control of DC motor microcontroller plays an important role. Ali, Y.S.E. et.al

proposes a system in which MC68HC11E9 fed by a DC chopper. Here the high frequency PWM signal is drived by Chopper. By controlling the PWM duty cycle, average voltage applied to the motor terminal is varied and hence the motor speed also varies [9]. Helei Wu et.al. Proposed a speed control of DC motor system, here the controller used is ARMS3C2410 and Microcontroller/Operating system-II, a RTOS. Where a closed loop system of motor speed control is developed that uses the PWM to control armature voltage. By regulating

the armature voltage, motor speed can be controlled [10]. The most common method used for controlling the speed of the motor is Duty cycle variation or PWM.

$$\text{DUTY CUYCLE} = \frac{\text{Pulse HIGH}}{\text{Pulse HIGH+ pulse LOW}} \%$$

For example for 25% duty cycle the voltage value obtained is 1.25V, similarly for 50% of duty cycle voltage value getting is 2.5V, For 75% of duty cycle 3.75V is getting this is for the 5V of supply. In this method voltage applied to motor can be varied by increasing the pulse width of the signal and hence the speed also varies .

Compared to above previous existing methods, this method has the advantage that the motor speed can be automatically controlled through temperature variation in a cost effective manner using ARDUINO

3.Proposed System

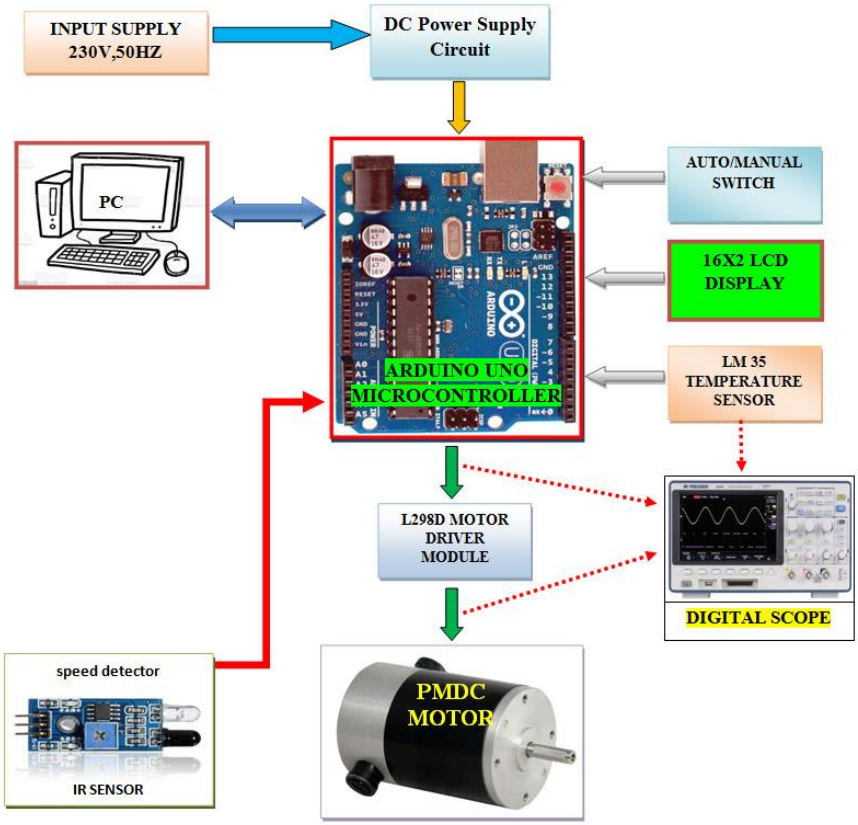

Figure.4. Block Diagram Of Whole System

In figure.4 shows block diagram of complete system in which pmdc motor connected to Arduino uno controller through l298d motor driver module. motor driver module convert 5volt PWM input signal in to 12volt dc output voltage.lm35 sensor and ir obstacle detector is connected to Arduino uno board .circuit diagram of syetem shows in figure 5.

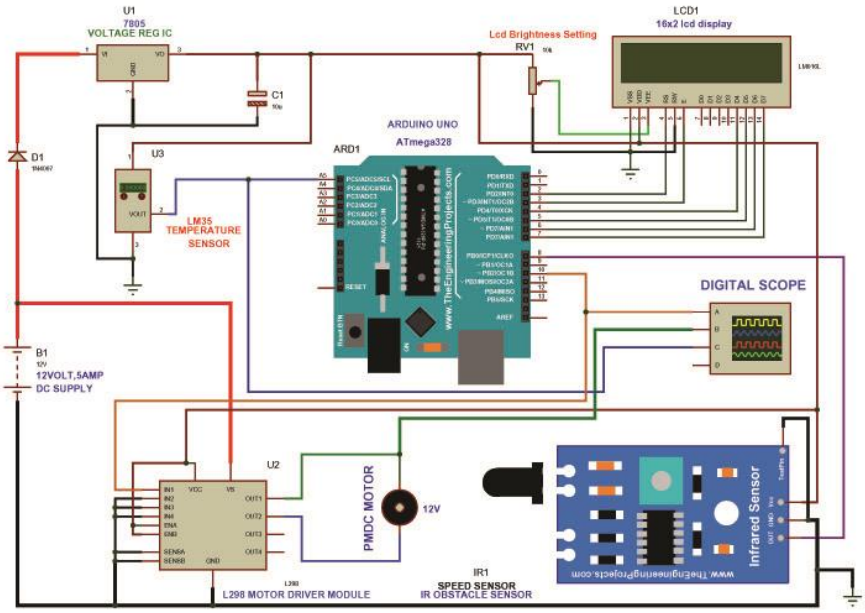

Figure.5.Circuit Diagram Of Whole System

4:-Component Description

4.1 Lm 35 Temperature Sensor

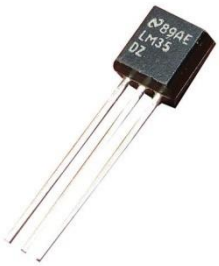

figure 6:- Temperature Sensor

The temperature sensor is an electronic gadget that quantifies the temperature of the environment and converts input information into electronic information for recorded & monitor, or signal temperature changes. There are wide sorts of temperature sensors. The LM35 series is obviously incorporated warmth exchanger with a yield voltage linearly proportional to the Centigrade temperature. This gadget has an advantage over linear temperature sensors measured in Kelvin, as the user isn't needed for subtract to a enormous steady voltage from the yield to acquire good Centigrade scaling. This gadget doesn't need any external alignment or trimming to provide typical accuracy of ±¼°C at room temperature and ±¾°C over a full −55°C to 150°C temperature range . Minimal effort is garneted by trimming and estimating at the capacity level. The low yield impedance, precise inherent calibration and straight output of the LM35 device make of interfacing to readout or control hardware particularly simple. The gadget is used for single power supply, or with in more or less supply. At LM35 gadget withdraw only 60 µA from supply, it has highest less self-warming of under 0.1°C in air. The LM35 gadget is evaluated to work55°C to 150°C temperature range, stretch the LM35C device is appraised for a −40°C to 110°C range (−10° with improved exactness). The LM35 series gadget are accessible packaged in airtight TO transistor packages, The plastic TO-92 transistor package is available in lm35c, lm35dand lm35cadevices. In lm35d device have eight lead surface mount little layout package and a plastic TO-220 package

4.2 Microcontroller

Arduino is an open-source electronics platform based on easy-to-use hardware and software. Arduino Board are able to read inputs - light on a sensor, a finger on a button, or a Twitter message - and turn it into an output - activating a motor, turning on an LED, publishing something online. You can tell your board what to do by sending a set of instructions to the microcontroller on the board. For that the Arduino Programming language (based on Wiring) is used, and the Arduino Software, based on Processing. Over the years Arduino has been the brain of thousands of projects, from everyday objects to complex scientific instruments. A worldwide community of makers - students, hobbyists, artists, programmers, and professionals - has gathered around this open-source platform, their contributions have added up to an incredible amount of accessible knowledge that can be of great help to novices and experts alike[10]. Figure7 Shows Arduino microcontroller board.

Figure 7:- Arduino Controller Board

4.3 Liquid Crystal Display

LCD (Liquid Crystal Display) screen is an electronic display module and find a wide range of applications. A 16x2 LCD display is very basic module and is very commonly used in various devices and circuits. These modules are preferred over seven segments and other multi segment LEDs s. The reasons being: LCDs are economical; easily programmable; have no limitation of

displaying special & even custom characters (unlike in seven segments), animations and so on. A 16x2 LCD means it can display 16 characters per line and there are 2 such lines. In this LCD each character is displayed in 5x7 pixel matrix. This LCD has two registers, namely, Command and Data. The command register stores the command instructions given to the LCD. A command is an instruction given to LCD to do a predefined task like initializing it, clearing its screen, setting the cursor position, controlling display etc. The data register stores the data to be displayed on the LCD. The data is the ASCII value of the character to be displayed on the LCD. Figure8 shows 16x2 LCD.

figure 8:-16x2 lcd display

5:- Results And Discussion

After the system design process has been completed, testing of system and data collection is done using PROTEUS ISIS 7.0 software. this system is tested under various temperature condition. Temperature and PWM cycle displayed on 16x2 lcd display. in the graph lm 35 sensor analog output shows by **Blue Colure** In channel B , Arduino PWM output shows by **yellow color** in channel A and motor terminal voltage shows by **Pink Colure** in channel C.

Case1:- if temperature is below the 30 degree Celsius so PWM output for PMDC motor is 0 and motor is in Off condition .

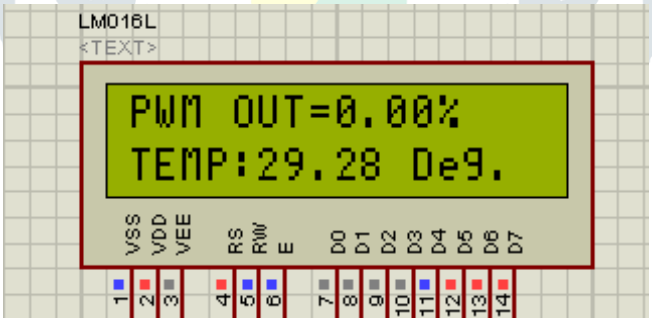

figure 9:- lcd status at temp=30 degree.

Case2:- If temperature is 32 degree Celsius so PWM output for PMDC motor is 14% and motor run at very slow speed.

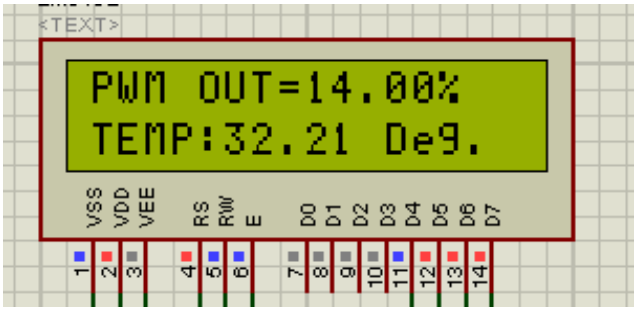

figure10:- lcd status at temp=32 degree.

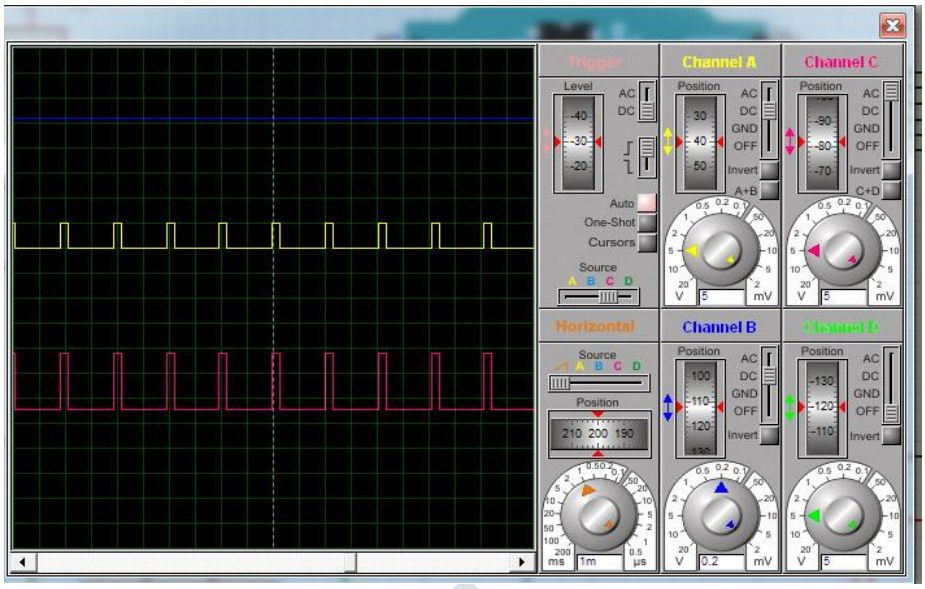

figure11:- wave form of lm35 sensor output, PWM output and voltage across motor terminal at temperature= 32 degree.

Case3:- if temperature is 40 degree Celsius so PWM output for pmdc motor is 54% and motor run at nearer 54% speed.

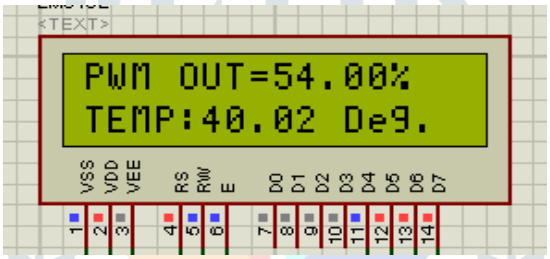

figure12:- lcd status at temp=40 degree.

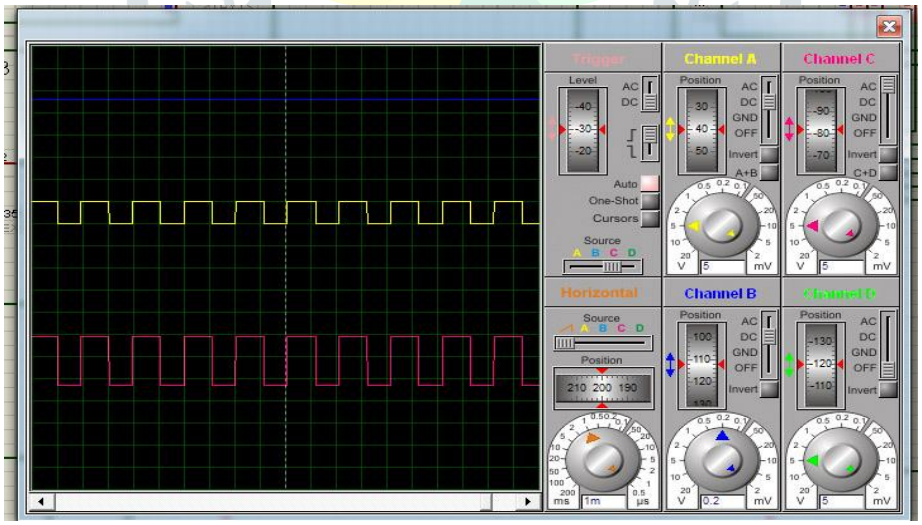

figure13:- Wave form of lm35 sensor output, PWM output and voltage across motor terminal at temperature= 40 degree.

Case4:- if temperature is 45 degree Celsius so PWM output for PMDC motor is 82% and motor run at nearer 80% speed.

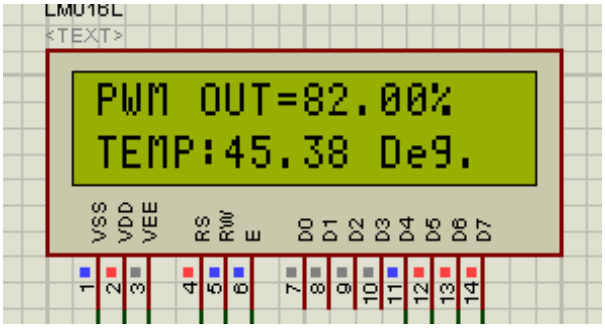

figure14:- lcd status at temp=45 degree.

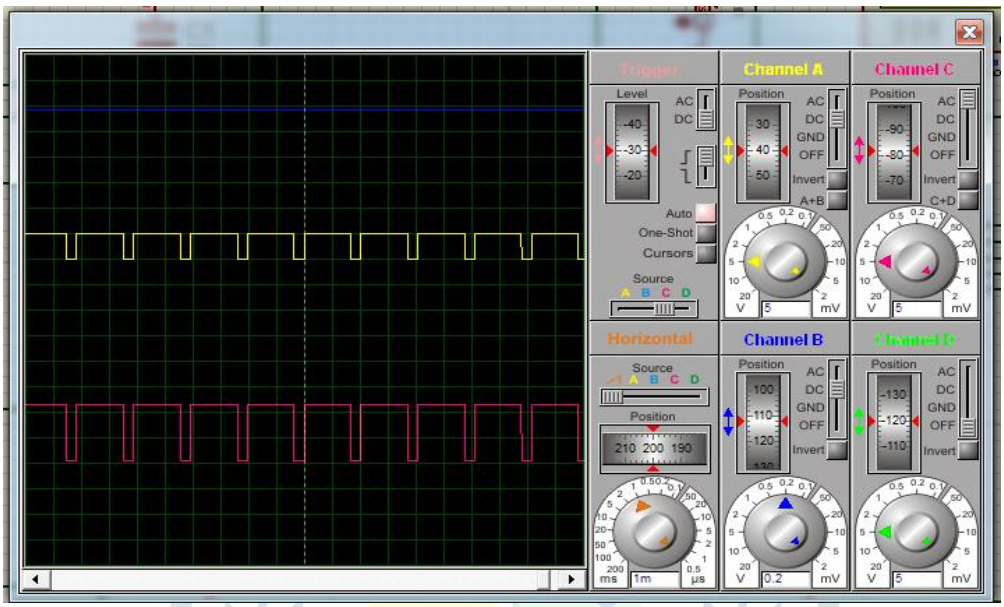

figure15:- Wave form of lm35 sensor output, PWM output and voltage across motor terminal at temperature= 45 degree.

Case5:- if temperature 48 degree Celsius so PWM output for pmdc motor is 97% and motor run at nearer maximum speed.

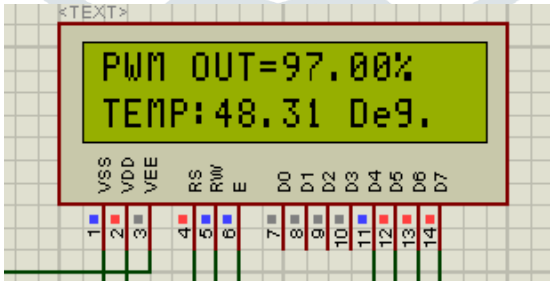

figure16:- lcd status at temp=48 degree.

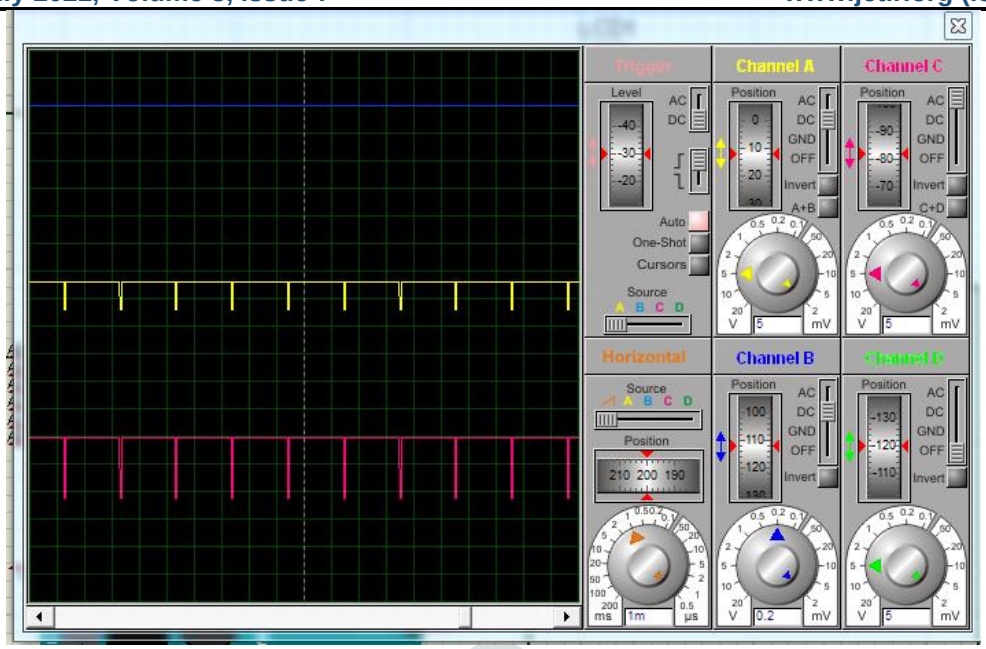

figure17:- wave form of lm35 sensor output, PWM output and voltage across motor terminal at temperature= 48 degree.

6. Conclusions

Based on the results of the research conducted and paying attention to the workings of the tool, it can be concluded that the motor speed vary very smoothly according to temperature variation. System design & tested in Proteus ISIS 7.0 software and program code developed in Arduino IDE 1.8 software. For speed control of PMDC motor PWM technique is used. PWM signal generate by ARDINO UNO controller on the basis of temperature sensor data.

7. Future works

Mathematical model can be obtained from the graph of the motor speed response. From the mathematical model, using MATLAB improved motor speed can be obtained by using controller package e.g. PID controller, fuzzy logic controller, etc.

REFERENCES

[1] Gopal K. Dubey, "*Fundamentals of ElectricDrives*", .Narosa Publishing House New Delhi,1989.

[2] Muhammad H. Rashid, *''Power ElectronicsCircuits,Devices,and Applications*," Prentice Hall, 3rdedition, 2003.

[3] Kumara MKSC, Dayananda PRD, Gunatillaka MDPR,Jayawickrama SS, "*PC based speed controlling of a dcmotor*", A fmal year report University of Moratuwa Illiniaus USA, 2001102.

[4] J Nicolai and T Castagnet , "*A Flexible Micro controller Based Chopper Driving a Permanent Magnet DC Motor*", The European Power Electronics Application. 1993.

[5] J. Chiasson, *Nonlinear Differential-Geometric Techniquesfor Control of a Series DC Motor, IEEE Transactionson Control Systems Technology*.vol 2, p. 35-42,1994.

[6] A Khoei Kh.Hadidi, "*MicroProcessor Based Closed- Loop Speed Control System for DC Motor Using Power MOSFET*", 3rd IEEE international conference on Electronics, Circuits and Systems(1996) vol.2, pp.1247-1250.

[7] Peter Spasov, "*Microcontroller Technology: The 68HC11"* Prentice Hall, 5th edition, 2004.

[8] In System Programming (ISP) for ATMEL chips, *http://www.ikalogic.com/isp.php.*

[9] Ali, Noor, S.B.M. Bashi & S.M. Hassan, M.K. "Microcontroller performance for DC motor speed control system speed control and over current protection of a DC motor". In proc. National Conf. Power Engineering, 15-16 Dec. 2003.

[10] W. Helei, X. Chen , L. Hu "Embedded System of DC Motor Speed Control Based on ARM" in proc. IEEE Conf. Computing, Communication, Control, and Management, CCCM '08. ISECS International Colloquium 3-4 Aug. 2008, vol.2, pp 123-126.

[11] Pulse width modulator module (PWMM), ATmega8L data sheet.

[12] ADC devices, ATmega8L data sheet.

[13] LCD interfacing, the microcontroller and embedded systems by Muhammad Ali Mazidi,Janice GillispieMazidi, Rolin D. Mckinlay.

[14] LCD interfacing with Microcontrollers Tutorial Index, http://www.8051projects.net/lcd- Interfacing/Recent Advances in Circuits, Systems, Signal and Telecommunications ISBN.