Review Paper On Voltage Magnitude Improvement With Space Vector PWM UPQC Along With PVA At DC Link

Ruchika A. Kalmegh, Pratyenja S. Ganorkar

Student of ME (EPS) Department of Electrical Engineering, sau Kamlatai Gawai Institute of Engineering & Technology, Darapur, Maharashtra, India
HOD Department of Electrical Engineering,Sau Kamlatai Gawai Institute of Engineering & Technology, Darapur, Maharashtra, India

Abstract : *In this project a UPQC is connected to a test system with harmonics and voltage variations creating sags and swells in source and load voltages. The UPQC is supported with PVA connected at the DC link injecting active and reactive powers to the grid. Individual controllers are modelled for shunt and series converters with feedback from the source and load voltages and currents. Both the converters work in synchronization to the source voltage with SRF controller using sinusoidal PWM technique. An MPPT is also used for magnitude generation of the reference current. For further improvement in the model the conventional sinusoidal PWM is replaced with space vector PWM reducing the harmonic content in the source voltages and currents. The design is modelled in MATLAB Simulink environment with graphs generated with respect to time*.

IndexTerms - **shunt compensator, MPPT, Harmonics, Power quality, Series compensator, UPQC etc**.

I. INTRODUCTION

Microgrids have boosted consumer reliability and reduced total energy losses, and have emerged as a viable alternative to standard power distribution systems [1], [2]. The impact of power quality (PQ) issues on overall power system performance is one topic of research for connecting a microgrid to the distribution grid. Voltage and frequency variations in the grid voltage, as well as harmonics in the grid voltage and load currents, are examples of PQ issues. Consumers typically use active filters [3], [4], uninterruptible power supplies [5], [6], dynamic voltage restorers [7], [8], and unified PQ conditioners [9] to protect their loads and systems from PQ disruptions in the distribution network. These devices, on the other hand, are typically deployed on the consumer side, and the PQ problems that they can manage are usually limited. A flexible ac distribution system device for the microgrid is proposed in this study, which is implemented utilising a combination of series and shunt voltage source inverters (VSIs). The suggested device is put at the microgrid's and other electrical loads' point of common coupling (PCC) on the distribution grid. A photovoltaic (PV) array and a battery to store excess energy generated by the PV array and provide power during sunless hours make up the suggested source for the dc-link voltage of the flexible ac distribution system device. The device has the capacity to increase the microgrid's PQ and reliability. Furthermore, the gadget may deliver real and reactive power to the microgrid during islanded operation. For fast sampling linear time-invariant (LTI) systems with input limitations, the suggested controller is based on a newly designed model predictive control (MPC) method to follow periodic reference signals. The VSI input signals are controlled using this control methodology, which decomposes the control issue into steady-state and transient subproblems that are optimised individually. The computational time can be considerably decreased in this manner.
This study presents a comprehensive solution based on a multi-input–multi-output (MIMO) state-space model for the operation of a flexible ac distribution system device for a microgrid. The device will perform the following functions at the same time:

1) compensating for grid voltage and load current harmonics;

2) real and reactive power control for load sharing during peak periods and grid power factor correction;

3) maintaining PQ despite minor voltage and frequency variations in the grid voltage;

4) dispatching real and reactive power to the microgrid when it becomes islanded.

II. LITRATURE REVIEW

.1. L. H. Tey, P. L. So, and Y. C. Chu, "Improvement of power quality using adaptive shunt active filter," IEEE Trans. Power Del., vol. 20, no. 2, pp. 1558–1568, Apr. 2005. Suggested that:

The necessity of a flexible ac distribution system device for microgrid applications is discussed in this study. The gadget is designed to improve the power quality and reliability of the microgrid's overall power distribution system. The use of extended Kalman filters for frequency tracking and extracting the harmonic spectra of the grid voltage and load currents in the microgrid is also investigated. This article also emphasises DG grouping in order to unify asset investment, power supply quality, and cooperation with the current power grid.

2.K. H. Kwan, Y. C. Chu, and P. L. So, "Model-based H∞ control of a unified power quality conditioner," IEEE Suggested that :

This paper presents a solution to the control of a unified power quality, conditioner, for PQ improvement in power distribution systems. The problem formulation allows not only harmonic compensation but also voltage sags/swells, load demand changes, and power factor correction to be tackled in a unified framework. The proposed controller combines the multivariable regulator theory with H∞ ,loop shaping, so that zero steady state error , robustness to modeling uncertainties, and insensitivity to supply frequency variations can be accomplished simultaneously, thus providing a complete theoretical solution to all the aforementioned PQ problems . The effectiveness of the proposed controller is in practice verified by experimental studies on a single phase power distribution system.

3. **Y. C. Chu and M. Z. Q. Chen, "Efficient model predictive algorithms for tracking of periodic signals," J. Control Sci. Eng., vol. 2012, pp. 1–13, 2012. Suggested that:**

The construction of efficient model predictive controllers for fast-sampling linear time-invariant systems with input restrictions to follow a collection of periodic references is investigated in this study. A steady-state sub problem identifies the ideal asymptotic operating point, and a transient sub problem pushes the given plant to this operating point. The steady-state sub problem can easily comprise hundreds of variables and constraints, whereas the transient sub problem is a tiny quadratic programme. Because of the decomposition, these two sub problems with extremely different computing difficulties can be tackled in parallel at different sample rates. Furthermore, for the steady-state sub problem, a receding horizon approach is used to efficiently spread the optimization over time, making its solution achievable for fast-sampling systems. A parameterization employing a dynamic policy on the inputs is introduced in addition to the traditional formulation based on the control inputs as variables, which significantly decreases the online processing needs. Both proposed algorithms have good convergence features, which have been confirmed through computer simulations..

III. SYSTEM DISCRIPTION

Figure 1 depicts the microgrid configuration used in this paper for the development of the flexible ac distribution system device. The proposed microgrid is made up of three radial feeders (1, 2, and 3), each of which is connected to a distributed generation (DG) unit that includes a microgenerator, a three-phase VSI, and a three-phase LC filter. Feeder 2 is, on the other hand, wired to a power source. In Section VI, the load types in the microgrid will be explored. There are two modes of operation for the flexible ac distribution system device: 1) PQ compensation and 2) emergency operation. The microgrid is connected to the distribution grid at the PCC during grid-connected operation. The two DG units are managed in this mode to provide local power and voltage support for loads 1–3, reducing the burden of power generation and delivery from the utility grid. The flexible ac distribution system device compensates for any harmonics in the currents drawn by the microgrid's nonlinear loads so that the harmonics do not spread to the rest of the electrical loads connected to the PCC. The device also compensates for grid voltage harmonics induced by other nonlinear loads connected at the PCC. Voltage and frequency variations in the grid voltage may occur as a result of the energization of large loads and quick changes in load demand. As a result, the gadget is also capable of handling such voltage and frequency fluctuations. The CBs operate to disconnect the microgrid from the grid when a fault develops on the grid's upstream network. The only power sources left to regulate the loads are the DG units. When the microgenerators' generation capacity is insufficient to fulfil total load demand, the flexible ac distribution system device switches to emergency mode and works to temporarily compensate for the deficiency in real and reactive power. . In Fig. 2, the detailed configuration of the three-phase flexible ac distribution system device is shown.

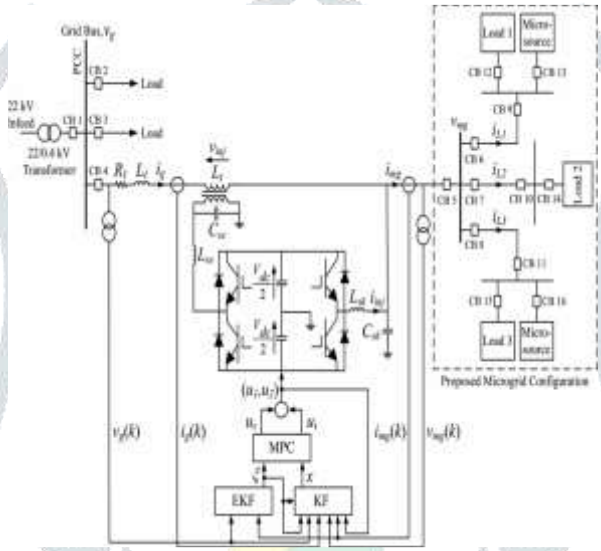

Fig.1. Basic system configuration

The power distribution infrastructure for modems is becoming increasingly exposed to various power quality issues [1-2]. Increased current and voltage harmonics are being exacerbated by the widespread usage of non-linear loads. Furthermore, the penetration of small/large-scale renewable energy systems based on wind, solar, fel cell, and other technologies at the distribution and transmission levels is rapidly expanding. Many studies have looked into unified power quality control as a possible way to improve the power quality of electrical distribution systems [1-3]. The purpose of a unified power quality conditioner is to adjust for supply voltage flicker/imbalance, and to provide reliable power. The function of unified power quality conditioner is to compensate supply voltage flicker/imbalance, reactive power, negativesequence current, and harmonics.

Using Matlab/Simulink software, the proposed control strategy was assessed and tested under non-ideal mains voltage and unbalanced load situations. Experimentation is also used to validate the given method. The generalised UPQC system is depicted in the diagram below. The UPQC is made up of two voltage source inverters that are connected back to back and share a common dc link. Figure 2 depicts the Upqc system's control diagram.

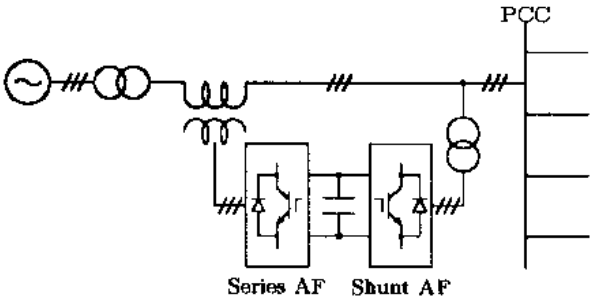

Fig. 1. General UPQC.

This paper proposes a novel power quality conditioner for three-feeder distribution systems, called as GUPQC which is realized by three single-phase three-level VSCs connected back-to-back by a common dc link capacitor. One VSC is connected in shunt to

a feeder through a coupling transformer and the other two VSCs, each in series with a feeder, are connected to the other two feeders through injection transformers. As there is no published work on the GUPQC, it is essential to establish the validity of its compensation performance in distribution or industrial networks. A new controller strategy based on synchronous reference frame for series compensators is also proposed.

CONCLUSION

Finally with all the graphical representation and output analysis of the grid and micro system, implementation of UPQC FACTs device in a renewable grid system will improve the quality of the system. The IRP method along with the space vector for the shunt and series VSIs respectively improvise the THD of the grid current from 27% to a value of 1.76% and with space vector the value is 1.5%. The voltages and the currents of the micro grid system are improvised with injection of active and reactive powers from the UPQC system

REFERENCES

1] L. H. Tey, P. L. So, and Y. C. Chu, "Improvement of power quality using adaptive shunt active filter," IEEE Trans. Power Del., vol. 20, no. 2, pp. 1558–1568, Apr. 2005.

[2] A. Nasiri, Z. Nie, S. B. Bekiarov, and A. Emadi, "An on-line UPS system with power factor correction and electric isolation using BIFRED converter," IEEE Trans. Ind. Electron., vol. 55, no. 2, pp. 722–730, Feb. 2008.

[3] M. Pascal, G. Garcer´a, E. Figueres, and F. G. Esp´ın, "Robust model-following control of parallel UPS single-phase inverters," IEEE Trans. Ind. Electron., vol. 55, no. 8, pp. 2870–2883, Aug. 2008.

[4] A. Gosh, A. K. Jindal, and A. Joshi, "Design of a capacitor-supported dynamic voltage restorer (DVR) for unbalanced and distorted loads," IEEE Trans. Power Del., vol. 19, no. 1, pp. 405–413, Jan. 2004.

[5] D. M. Vilathagamuwa, H. M. Wijekoon, and S. S. Choi, "A novel technique to compensate voltage sags in multiline distribution system–The interline dynamic voltage restorer," IEEE Trans. Ind. Electron., vol. 54, no. 4, pp. 2249–2261, Aug. 2007.

[6] K. H. Kwan, Y. C. Chu, and P. L. So, "Model-based H∞ control of a unified power quality conditioner," IEEE Trans. Ind. Electron., vol. 56, no. 7, pp. 2493–2502, Jul. 2009.

[7] A. Gosh and G. Ledwich, Power Quality Enhancement Using Custom Power Devices. Norwell, MA, USA: Kluwer, 2002, pp. 380–406.

[8] Y. C. Chu and M. Z. Q. Chen, "Efficient model predictive algorithms for tracking of periodic signals," J. Control Sci. Eng., vol. 2012, pp. 1–13, 2012.

[9] A. Pigazo and V. M. Moreno, Estimation of Electrical Power Quantities by Means of Kalman Filtering. Vienna, Austria: InTech, 2009, pp. 375– 396.