JETIR.ORG ISSN: 2349-5162 | ESTD Year : 2014 | Monthly Issue
JOURNAL OF EMERGING TECHNOLOGIES AND INNOVATIVE RESEARCH (JETIR)
An International Scholarly Open Access, Peer-reviewed, Refereed Journal

EXO-SKELETON ARM

[1]Priyanka Khore,[2]Mayur Bhalerao,[3]Pushkar Deodhar, [4]Dr. R.C.Jaiswal,

[5]Dr. G.P.Potdar, [6]Prof. M.R. Khodaskar

[1,2,3,4]Department of E&TC Engg.,[5]Department of Computer Engg., [6]Department of IT Engg
SCTR's Pune Institute of Computer Technology, Pune

Abstract : This project was undertaken for the advancement of the methods/technology used in Physiotherapy practices and for the introduction of robotics in medical practices. The proposed Robotic Arm model undertakes exercise sessions without the help of a physiotherapist. This Exoskeleton arm which when placed on user's body can act as an amplifier that can augment, reinforce or restore human performance. With few advancements to the existing model, it can be used for B,C,D as well. It's uses are listed below:

A. Medical

1.Child suffering from Erbs palsy/Brachial plexus injury
2.Abduction of shoulder
3.To give sensory feedback to patient to get a feel of movement in case of paralysis.
4.Guided or limited range in case of frozen shoulder.

B. Agriculture

Exoskeleton mechanism can assist in the wearer's work like lifting heavy stuff and assist to keep your hands in air without any strain i.e. doing overhead work like plucking grapes.

C. Defence

Used by soldiers for lifting heavy guns, backpacks.

D. Industries

In industry it can be used to lift heavy weight machine parts.

I. INTRODUCTION

The earliest exoskeleton-like device[1-5]was developed in 1890 by a Russian named Nicholas which does the operations like walk, jump and run as aided equipment. The unit was passive in operation and required human power, that used compressed gas bags to store energy and it would assist with movements.

In 1917, scientist Kelley made a pedometer, operated on steam power. It included artificial ligaments play a role in parallel to the wearers actions. Using this equipment, energy was also generated from the user.

The initial exoskeleton was made by GE company and the US Armed Forces. It was a mobile machine integrated with human movements. It was named Hardiman and lifted 110 KG feel like lifting 4.5 KG. The apparatus used hydraulics and electricity[6-10], which allowed the wearer to boost intensity by 20+, so that pick up of 25 KG was as easy as lifting 1KG without the apparatus. It is implemented using feature dubbed force feedback.

In 1960s, Alamos Lab did work on an exoskeleton arm project[11-15]known as Pitman. A person, who had broken his back in a accident, created the LIFESUIT equipment.

LS-I was constructed in 2001.In 2005, LS-12 was developed. It completed 4.8-KM race in 90 minutes. The current LS-14 walks 1.6 km and lifts 92 kg for the user.

II. LITERATURE REVIEW

The morning of the development of creatural robotics coincided with the morning of the development of the world's first active exoskeletons[16-18] at the Mihailo Pupin Institute in 1969, under the guidance of Prof. Vukobratovic. It can be said that active exoskeletons were the forerunners of the ultramodern high- performance creatural robots. Below are the existing models and uses of exo- skeleton presently all over the world.

1. Powered Exo-skeletons

These allow individuals with certain injuries like the Spinal Cord injury to move freely about everywhere. It helps ameliorate the position of physical exertion in the cases in an independent manner. It is also observed that this technology improves the cerebral good by dwindling anxiety and other depressive symptoms.

2. Full body Exo-skeletons

These were designed to compound mortal strength .There were some specialized issues with these designs and many of these were noway commercially manufactured but the systems redounded in numerous conference papers and journal publications.

3. Powered Devices

At present, medical Exo- configurations allow limited mobility to people suffering from paraplegia. Robotics in stir remedy allowed cases to have positive gests. In an trial, the children with cerebral paralysis were asked to use a routine with the exo- shell suit. No physical detriment was done and the children didn't get fatigued. Reswick and Mergler innovated exoskeletons performed for paralyzed persons. Still, veritably many hand robots are commercially available because of complexity.

4. Biorobotics

Scientists have now forayed into the field of Biorobotics that combines biomedical engineering and robotics to develop novel apparatus.

III. PROPOSED WORK

Scope of the project is confined to the robotics field. Objective of the project is to address the problems of the patients undergoing a physiotherapy treatment for speedy recovery and to regain the control of their muscle strength. Arduino is used for efficient implementations [19-22].

Working as per the below diagrams is explained below:

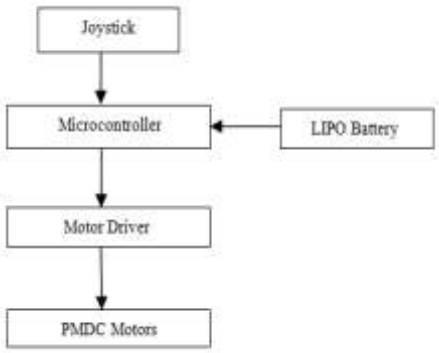

Fig.1. Main Block diagram

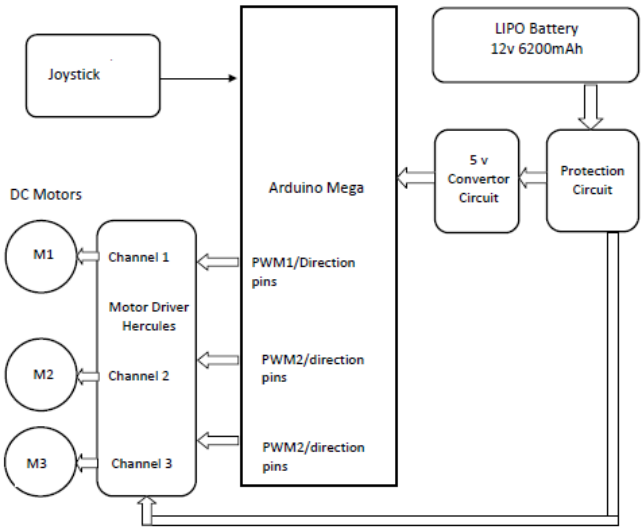

Fig.2. Detailed Block diagram

1. Motors are used to control the movement of the arm providing extra strength to the user using a mechanical arm design.
2. The motion of the motor is controlled using a joystick which responds to the movement of the muscle through its supply of analog values ranging from 0 to 1023 which be manually given.
3. Arduino Mega is used which will be having a Real Time Operating System so that the response of the arm is immediate to the Joystick.
4. The Joystick has 4 input values for folded arm movement and sideways arm movement and it responds with an analog output from 0 to 5v.
5. The 3 PMDC motors are controlled by the Microcontroller through a motor driver.
6. A Hercules motor driver of around 12 A is used. As the user manually gives input to the joystick in the analog range of 0 to 1023 wherein 0 refers to the centre and as the range increases the movement will increase either in the upward or downward direction as per the connection of the joystick.
7. The movements of the joystick are a).folded movement (90 degrees) b) movement of the whole arm(90 degrees) and c) sideways movement (90 degrees).
8. Joystick sends the signal to Microcontroller and hence the Microcontroller drives the motor through motor driver. Brake wires are wound around the motor and the Arm pulleys to have control over the arm. They will help in stalling the arm for a moment.
9. The length of the brake wire is adjusted according to the maximum movement of the Arm. A lithium polymer battery to power the whole setup. This battery will last up to 4 hours if continuously used.

IV. RESULTS AND DISCUSSION

1. Torque produced is around 2.5 N-cm which will enable the user to lift weights around 25kg.
2. Exoskeleton arm available in market costs around 1 lakh

   INR butthe proposed arm costs around 25k INR.
3. As per the torque requirement and power consumption of the proposed system, the battery used was of 12V, 62000 mAh which lasts for 4 hours.
4. The total power requirement of the system is around 54Watts.
5. This Exoskeleton arm will enhance the strength of userand will help him/her to perform actions like:
   1) To lift heavy weight objects
   2) Repetitive actions by consuming less energy
   3) Undertaking exercise sessions in Physiotherapy
   4) Used by soldiers for lifting heavy guns, backpacks
   5) In industry it can be used for to lift heavy weight machine parts.

V. ACKNOWLEDGMENT

I would express my gratitude towards my mentor, Dr. R. C. Jaiswal for being of great support and guiding me through the research. He gave this paper the insight and the expertise it needed for making it a presentable one. His guidance, constructive criticism and encouragement at various stages has been a great support.

REFERENCES

[1] L. Aksman, "Force Estimation Based Compliance Control of a Two Link Harmonically Driven Robotic Manipulator," Master's Thesis, University of Maryland, Dec. 2006.

[2] M. Bergamasco, B. Allotta, L. Bosio, L. Ferretti, G. Parrini, G. Prisco, F. Salsedo, and G. Sartini, "An arm exoskeleton system for teleoperation and virtual environments applications," in Proc. of the IEEE Intl. Conf. on Robotics and Automation, San Diego, 1994, pp. 1449–1454.

[3] M. Bergamasco, G.M. Prisco, "Virtual Surfaces Contour Following: An Experimental Approach Exploiting an Arm Exoskeleton as Haptic Interface," in Proc. of the ASMEDymanic
Systems and Control Division, vol.57-2, 1995, pp.681-687.

[4] M.A. Buckley, G.R. Johnson, "Computer simulation of the dynamics of human arm and orthosis linkage mechanism," in Proc. Inst. Mech. Engrs. Part H, vol. 211, 1997, pp.349-357.

[5] D.G. Caldwell, N. Tsagarakis, D. Badihi, G.A. Medrano-Cerda, "Pneumatic Muscle Actuator Technology: a light weight power system for a Humanoid Robot," in Proc. of the IEEE Int. Conf. on Robotics & Automation, Leuven, Belgium, May 1998, pp.3053-3058.

[6] W. Chou, T. Wang, J. Xiao, "Haptic interaction with virtual environment using an arm type exoskeleton device," in Proc. of the IEEE Intl. Conf. on Robotics and Automation, New Orleans, USA, Apr. 2004, pp.1992–1997. 184

[7] J.J. Craig, Introduction to Robotics Mechanics and Control, 3rd ed. Upper Saddle River, NJ: Prentice Hall, 2005.

[8] A. Frisoli, F. Rocchi, S. Marcheschi, A. Dettori, F.Salsedo, and M. Bergamasco, "A new force-feedback arm exoskeleton for haptic interaction in virtual environments," in Proc. of the First Joint Euro-haptics Conference and Symposium on Haptic Interfaces for Virtual Environment and Teleoperator Systems, 2005.

[9] T.B. Moeslund, C.B. Madsen, and E. Granum, "Modelling the 3d pose of a human arm and the shoulder complex utilizing only two parameters," in Proc. of the Intl. Conference on Model-based

Imaging, Rendering, Image Analysis and Graphical Special Effects, INRIA Rocquencourt, France, 2003.

[10]A.Nakai, Y. Kunii, H. Hashimoto, F. Harashima, "Arm Type Haptic Human Interface: Sensor Arm", in the 7th Int. Conf. on Artificial Reality and Teleexistence, University of Tokyo, Tokyo, Japan, 1997, pp.77-84.

[11]D.W.Repperger, S.J. Remis, and G. Merrill, "Performance measures of teleoperation using an exoskeleton device," in Proc. of the IEEE Intl. Conf. onn Robotics and Automation, Cincinnati, May 1990, pp.552–557.

[12]D.P. Romilly, C. Anglin, R.G. Gosine, C. Hershler, S.U. Raschke, "A Functional Task Analysis and Motion Simulation for the Development of a Powered Upper- Limb Orthosis," in Transactions on Rehabilitation Engineering, vol. 2, no. 3, 1994, pp.119-129.

[13]J. Rosen, B. Hannaford, and S. Burns, "Neural control of an upper limb powered exoskeleton system – grant report," in Proc. of the First NSF Robotics and Computer Vision (RCV) Workshop, Los Vegas, Oct. 2003.

[14]N.Tsagarakis, D.G. Caldwell, and G.A. Medrano-Cerda, "A 7 dof pneumatic muscle actuator (pma) powered exoskeleton," in Proc. of the IEEE Intl. Workshop on Robot and Human Interaction, Pisa, Italy, Sep. 1999, pp.327–333.

[15]https://www.academia.edu/37726088/Developing_Support_Technologies_Conceptual_Overview_and_Contributions

[16]https://www.academia.edu/38464330/The_Cybernetics_of_Support._How_Exoskeletons_are_Interfaced_with_Physical_Bodies_for_Industrial_Assembly

[17]Robotics: Everything You Need to Know about Robotics from Beginner to Expert,Edition 2

[18] R.L. Williams, M.A. Murphy, D. North, J. Berlin, and M. Krier, "KinestheticForce/moment feedback via active exoskeleton," in Proc. of the Image SocietyConference, Scottsdale, Arizona, 1998.

[19] Jaiswal R.C. and Vipul Phulphagar, "Arduino Controlled Weight MonitoringWithDashboard Analysis", International Journal for Research in Applied Science & Engineering Technology (IJRASET), ISSN: 2321-9653; IC Value: 45.98; SJ Impact Factor:6.887, Volume 5 Issue XI November 2017.

[20] Jaiswal R.C. and SumukhBallal, "Scalable Healthcare Sensor Network", International Journal of Emerging Technologies and Innovative Research (www.jetir.org | UGC and issn Approved), ISSN:2349-5162, Vol.6, Issue 2, page no. pp350-354, February-2019.

[21] Jaiswal R.C. and Nehal Borole, " Autonomous Vehicle Prototype Development and Navigation using ROS", International Journal for Research in Applied Science & Engineering Technology (IJRASET), Open Access, Peer Reviewed and refereed Journal , ISSN: 2321-9653; IC Value: 45.98; SJ Impact Factor:7.177, Volume 7 Issue XI, pp. 510-514, Nov 2019.

[22] Jaiswal R. C. and Danish khan, "Arduino based Weather Monitoring and Forecasting System using SARIMA Time-Series Forecasting", Journal of Emerging Technologies and Innovative Research (JETIR), Open Access, Peer Reviewed and refereed Journal, ISSN-2349-5162, Impact Factor:5.87, Volume 7, Issue 11, pp. 1149-1154, November 2020.