JETIR.ORG ISSN: 2349-5162 | ESTD Year : 2014 | Monthly Issue
JOURNAL OF EMERGING TECHNOLOGIES AND INNOVATIVE RESEARCH (JETIR)
An International Scholarly Open Access, Peer-reviewed, Refereed Journal

" ARTIFICIAL INTELLIGENCE IN THE CONSTRUCTION INDUSTRY- OBSTACLE DETECTION ON CONSTRUCTION SITE USING IR SENSOR"

TUSHAR BHARAT PATIL[1], YOGITA FULSE[2]
[1]M.Tech student, Civil Engineering Department SOET, Sandip University Nashik
[2]PG Coordinator, Civil Engineering Department SOET, Sandip University Nashik

Abstract: Complete and reliable sensing system for obstacle detection can benefit a lot from the combined use of multiple types of sensors, especially from theactive-passive combination. Any one particular type of technology may have difficulties to meet all necessary requirements in order to detect an obstacle in various lighting or weather conditions. The clutter background and complex moving patterns of all objects which may appear on a road scene demand sophisticated processing of sensor inputs. To study the present status of use of Artificial Intelligence (AI) in the Construction Industry & Construction Management in the field of Obstacle detection on construction site for the workers working on multistorey buildings and for the barricading protected area.

Keywords: Artificial Intelligence,Obstacle Detection,IR Sensor,Construction Site.

1. INTRODUCTION

With the increasing demand for autonomous projects, the use of sensors is increasing. Sensors are sophisticated devices that convertthe physical parameter (for example: temperature, pressure, humidity, speed, etc.) into a signal which can be measured electrically.They are very important to robotics. It is able to give robots remote access and make decisions as for a desired environment. It canalso perceive its own environment and through programming can get the output it desires. Out of these, the motion detectors are based on the Infra-Red, Ultrasonic, and Microwave / radar technology. Chracter the obstacle avoiding prototype will avoid the obstacles in its range infront of barricades around the excavation Due to the reliability, accessibility and cost effectiveness of using mobile prototype in industry the obstacle avoiding prototype became important. we proposed an exampleof the obstacle avoiding module using IR sensor. This module can be used for several applications in education, research or industrial.

2. RESEARCH OBJECTIVE

The aim of the study to study the present status of use of Artificial Intelligence (AI) in the Construction Industry & Construction Management in the field of Obstacle detection in following cases.

- To give Real Time warning to the workers near the unsafe areas,working on the multistorey buildings.
- To give Real Time indications to the workers and trucks,vehicles coming towards the construction barricades surrounding the unsafe or protected area.

3 LITERATURE REVIEW

Based on the used techniques for image features extraction, all methods for vision- based on-board obstacle detection can be divided into two main groups: methods based on traditional CV and methods based on AI. The first group has methods which use well-established CV techniques for both image segmentation (e.g., edge detection, cornerdetection or threshold segmentation), and for object recognition based on the extraction of so-called "hand-crafted" features. "Hand-crafted" features refer to properties extracted from an image (e.g., edges, corners, and shape descriptors of segmented image regions) using various methods that exploit the information present in the image itself. The AI- based methods in the second group are based on Machine Learning (ML) and in particular on Deep Learning (DL). In contrast to traditional CV methods that

use “hand-crafted” image features to classify image areas as belonging to particular object classes, DL uses the concept of “end-to-end” learning of object detection.

Sylvain Cardin, Daniel Thalmann and Frederic Vexo, in their paper presents an obstacle detection system for visually impaired people. Usercan be alerted of closed obstacles in range while traveling in their environment. The system we propose detects the nearest obstacle via a stereoscopic sonar system andsends back vibro-tactile feedback to inform the user about its localization. The system aims at increasing the mobility of visually impaired people by offering new sensing abilities.

Brian Peasley and Stan Birchfield Department of Electrical and Computer Engineering in their paper proposes a novel approach to obstacle detection and avoidance using a 3D sensor. We depart fromthe approach of previous researchers who use depth images from 3D sensors projected onto UV-disparity to detect obstacles.Instead, our approach relies on projecting 3D points onto the ground plane, which is estimated during a calibration step.A 2D occupancy map is then used to determine the presenceof obstacles, from which translation and rotation velocities are computed to avoid the obstacles.

Reetu Malhotra, Vanshika, Neha,in their paper Road accidents are pervasive and prove to be fatal. The presented paper deals with the construction and working of adevice for obstacle detection. Obstacle detection is a mechanism used for the identification of any obstruction that may hinder the way of the vehicle. It can improve mobility as well as the safety ofpeople who drive on roads. The proposed system automatically turns left or right on detecting obstacles using ultrasonic sensors & an Arduino. The primary focus is to make the vehicle secure and to ensure the safety of the driver. The project initiated based on a case study done by gathering information from community partners and bus drivers of Chitkara University, Punjab, India.

Yue Pan, Limao Zhang in their paper- The adoption of AI has gained significant attention, which tries to equip machines with human-like intelligent behavior and reasoning. It is found that various AI techniques have created tremen-dous value in revolutionizing the construction industry, leading to a more reliable, automated, self-modifying, time-saving, and cost-effective process of CEM.

4. METHODOLOGY

4.1 Research Design

The IR module sends IR rays that will be reflected back if there is any obstacle present in its path. If there is no obstacle the rays go straight without reflecting back to the sensor. Then the relay is in NO mode making no change to the motion of the robot.On the other hand if there is an obstacle present in the path of robot the rays collide with the obstacle and get reflected back from the obstacle and reach the sensor which will then give a high output to the relay module and transistor that will make the desired wheel of motor to stop and move in the desired direction. This is a very simple mechanism which involves providing supply to the motors for motion control using relay and transistor that takes input from sensor module.

The areas of application of Infrared technology include sensing and remote controls. The infrared sensor senses its surroundings by emitting or receivingIR radiation. The working of any Infrared sensor is according to three laws viz.Planck’s Radiation law, Stephen Boltzmann law and Wien’s Displacement law. The IR module consists of LED to emit IR radiation and a photo diodethat detects the radiation. Then there is a comparator, which has a threshold value that can be altered by potentiometer, on which the output of sensor will depend. Normally, the output is LOW for no obstacle and HIGH for obstacle.

4.2 Selection of Sensors

With the large number of sensors available in the market, it is necessary to choose the right sensor. There are certain features whichhave to be considered when we choose a sensor: Accuracy, Environmental condition, Range, Calibration, Resolution, Cost and Repeatability. In our project we have made a small prototype of an automobile for Adaptive Cruise Control where the car prototype, whose heart will be the Raspberry Pi, a microcontroller, which when set, will lock the object/car in front of it. For this we need to select a suitable sensor.

4.3 PCB Fabrication & Design

Printed Circuit Boards (PCBs) form the backbone of all major electronics. These miraculous inventions pop up in nearly all computational electronics, including simpler devices like digital clocks, calculators etc. For the uninitiated, a PCB routes electrical signals through electronics, which satisfies the device's electrical and mechanical circuit requirements. In short, PCBs tell the electricity where to go, bringing your electronics to life.

PCBs direct current around their surface through a network of copper pathways. The complex system of copper routes determines the unique role of each piece of PCB circuit board. Before PCB design, circuit designers are recommended to get a tour of a PC board shop and communicate with fabricators face to face over their PCB manufacturing demands. It helps prevent

designers making any unnecessary errors from getting transmitted during the design stage. However, as more companies outsource their PCB manufacturing inquiries to overseas suppliers, this becomes unpractical. On this account, we present this article in order to provide a proper understanding of PCB board manufacturing process steps. Hopefully it gives circuit designers and those new to PCB Industry a clear view on how printed circuit boards are manufactured, and avoid making those unnecessary errors.

4.4 Connections of Components

Components are generally soldered onto the PCB to both electrically connect and mechanically fasten them to it. Printed circuit boards are used in nearly all electronic products and in some electrical products, such as passive switch boxes. Understanding how to solder electronics is one of the most fundamental skills you should know, be it working with microcontroller boards (E.g. Arduino), building a circuit, or even simply forming a connection between electronic components. What's even better about learning how to solder is that it's much more fulfilling and enjoyable thanks to its hands-on experience.

5. DATA COLLECTED FROM SURVEY

Data collection was possible through the use of two different sensors which were placed to read data from the environment and send digital information to the microcontroller which then reads the data and carries out the necessary instructions as designed by the users. The sensors for collecting data include the IR sensor module and the Ultrasonic sensor. The IR sensor module consists of an IR emitter and an IR receiver placed side by side and when a reflection is received the IR receiver sends a low output and a high output when an input signal is received. Hence, a pair of the IR sensor module is placed at the bottom of the frame work to face the ground and monitor just above the grass level for any obstacle on the path that the robot should be following, an IR sensor module is also placed at an opening at the front of the robot as an obstacle detection to identify when an obstacle is on the path. A single Ultrasonic Sensor is also placed just on top of the robot high enough to follow the pavement of thelawn to avoid hitting the lawn, the microcontroller reads the distance of the pavement from the ultrasonic sensorand turns right and left after each time it reaches the end ofthe wall.

5.1 Criteria to choose a sensors

With the large number of sensors available in the market, it is necessary to choose the right sensor. There are certain features whichhave to be considered when we choose a sensor: Accuracy, Environmental condition, Range, Calibration, Resolution, Cost and Repeatability.

- In our project we have made a small prototype of an automobile for Adaptive Cruise Control where the car prototype, whose heart will be the Raspberry Pi, a microcontroller, which when set, will lock the object/car in front of it. For this we need to select a suitable sensor. Therefore, we first carried out a study of the following Infrared sensors.

5.1.2 Features of Infrared sensors

No other measuring method can be successfully put to use on such a wide scale and in so many different applications.

- The device is extremely robust, making it suitable for even the toughest conditions.
- The sensor surface cleans itself through vibration, making the sensor insensitive to dirt.
- The physical principle the propagation of sound works, with a few exceptions, in practically any environment.
- Ultrasonic sensors have proven their reliability and endurance in virtually all industrial sectors.

5.1.3 Obstacle Detecton

On detection of the obstacle, the braking force to be applied depends upon the distance. It depends on the cases discussed below.

Case 1. The Obstacle is Stationary on the Path

In this case, the host vehicle detects the obstacle and determines the distance of the obstacle from the host. The speed is then, decreased automatically. If the distance exceeds the critical distance (not safe distance for driving); the braking mechanism is activated and the horn is pressed. If the obstacle is a living creature, it might move out of the path in accordance to the horn. But in case the obstacle is not moving, the speed is kept on decreasing in such a way that the host is brought to a stop at a fixed pre-setvalue before the obstacle.

Case 2. The Obstacle is Travelling Towards the User

This case is similar to the first case. But here, the brakes will be pressed harder. As soon as the obstacle moves away from the path of the host, the sensor will detect it and send a signal to the Raspberry Pi, which will in turn, restart the host/prototype automatically. The speed of the dc motor of the host, will resume to its original speed depending on whether or not any more obstacles lie in its path.

5.2 Working of Infrared sensor

Infrared technology addresses a wide variety of wireless applications. The main areas are sensing and remote controls. In the electromagnetic spectrum, the infrared portion is divided into three regions: near infrared region, mid infrared region and far infrared region.

The wavelengths of these regions and their applications are shown below.

- Near infrared region — 700 nm to 1400 nm — IR sensors, fiber optic
- Mid infrared region — 1400 nm to 3000 nm — Heat sensing
- Far infrared region — 3000 nm to 1 mm — Thermal imaging

For optical sensing and optical communication, photo optics technologies are used in the near infrared region as the light is less complex than RF when implemented as a source of signal. Optical wireless communication is done with IR data transmission for short range applications.An infrared sensor emits and/or detects infrared radiation to sense its surroundings. There are five basic elements used in a typical infrared detection system: an infrared source, a transmission medium, optical component, infrared detectors or receivers and signal processing. Infrared lasers and Infrared LED's of specific wavelength can be used as infrared sources. The three main types of media used for infrared transmission are vacuum, atmosphere and optical fibers. Optical components are used to focus the infrared radiation or to limit the spectral response. Optical lenses made of Quartz, Germanium and Silicon are used to focus the infrared radiation. Infrared receivers can be photodiodes, phototransistors etc. some important specifications of infrared receivers are photosensitivity, detectivity and noise equivalent power. Signal processing is done by amplifiers as the output of infrared detector is very small.

5.2.1 Types of Infrared Sensors

- Infrared sensors can be passive or active. Passive infrared sensors are basically Infrared detectors. Passive infrared sensors do not use any infrared source and detects energy emitted by obstacles in the field of view. They are of two types: quantum and thermal. Thermal infrared sensors use infrared energy as the source of heat and are independent of wavelength. Thermocouples, pyroelectric detectors and bolometers are the common types of thermal infrared detectors.

- Quantum type infrared detectors offer higher detection performance and are faster than thermal type infrared detectors. The photosensitivity of quantum type detectors is wavelength dependent. Quantum type detectors are further classified into two types: intrinsic and extrinsic types. Intrinsic type quantum detectors are photoconductive cells and photovoltaic cells.

- Active infrared sensors consist of two elements: infrared source and infrared detector. Infrared sources include an LED or infrared laser diode. Infrared detectors include photodiodes or phototransistors. The energy emitted by the infrared source is reflected by an object and falls on the infrared detector,

6. DATA ANALYSIS

Data analysis is a process used by researchers for reducing data to a story and interpreting it to derive insights. The data analysis process helps in reducing a large chunk of data into smaller fragments, which makes sense. Three essential things take place during the data analysis process — the first data organization. Summarization and categorization together contribute to becoming the second known method used for data reduction. It helps in finding patterns and themes in the data for easy identification and linking. Third and the last way is data analysis – researchers do it in both top-down or bottom-up fashion. Researchers rely heavily on data as they have a story to tell or problems to solve. It starts with a question, and data is nothing but an answer to that question. But, what if there is no question to ask? Well! It is possible to explore data even without a problem – we call it 'Data Mining' which often reveal some interesting patterns within the data that are worth exploring. Irrelevant to the type of data, researchers explore, their mission, and audiences' vision guide them to find the patterns to shape the story they want to tell. One of the essential things expected from researchers while analyzing data is to stay open and remain unbiased towards unexpected patterns, expressions, and results.

6.1 IR Proximity Module

The areas of application of Infrared technology include sensing and remote controls. The infrared sensor senses its surroundings by emitting or receivingIR radiation. The working of any Infrared sensor is according to three laws viz.Planck's Radiation law, Stephen – Boltzmann law and Wien's Displacement law. The IR module consists of LED to emit IR radiation and a photo diodethat detects the radiation.

6.2 Infrared Transmitter & Receiver

An LED is used as an IR transmitter to emit IR radiation which is invisible to human. eye. So, they are called IR LED's. The transmitter consumes about 3 to5 mA of current when it is operated at a supply of 5V. The most commonly used modulation in IR sensors is OOK (ON – OFF – KEYING) modulation. The transmitters can be modulated to produce any particular frequency ofinfrared light. Infrared receivers detect the radiation emitted from an IR transmitter. They are nothing but simple photodiodes and phototransistors and differ from normal photo diodes because they detect only infrared radiation. The picture of an IR receiver or a photodiode is shown below. While using them together we must ensure that the properties of receiver are matching with transmitter used. It consists of a MOSFET which allows the current to flow only when phototransistor receives IR radiation. So, the MOSFET turns on. This turns up the LED which acts as load to the MOSFET. The distance of detection can be controlled by adjusting the potentiometer at the photo transistor

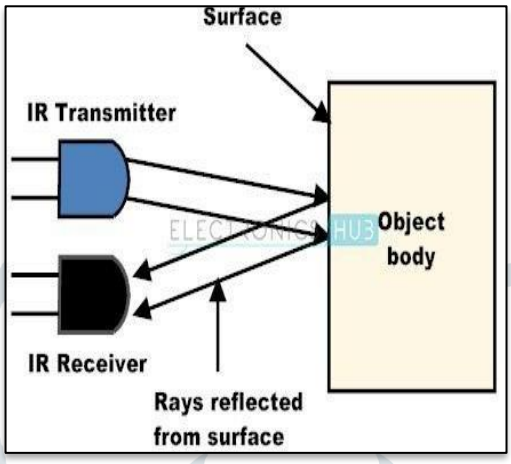

Fig 6.2 : infrared transmitter & receiver

6.3 Obstacle sensing circuit or IR sensing circuit

It consists of an IR LED, a photodiode, a potentiometer, an IC Operational amplifier and an LED. IR LED emits infrared light. The Photodiode detects the infrared light. An IC Op – Amp is used as a voltage comparator. The potentiometer is used to calibrate the output of the sensor according to the requirement. When the light emitted by the IR LED is incident on the photodiode after hitting an object, the resistance of the photodiode falls down from a huge value. One of the input of the op amp is at threshold value set by the potentiometer. The other input to the op-amp is from the photodiode's series resistor. When the incident radiation is more on the photodiode, the voltage drop across the series resistor will be high. In the IC, both the threshold voltage and the voltage across the series resistor are compared. If the voltage across the resistor series to photodiode is greater than that of the threshold voltage, the output of the IC Op – Amp is high. As the output of the IC is connected to an LED, it lightens up. The threshold voltage can be adjusted by adjusting the potentiometer depending on the environmental conditions.

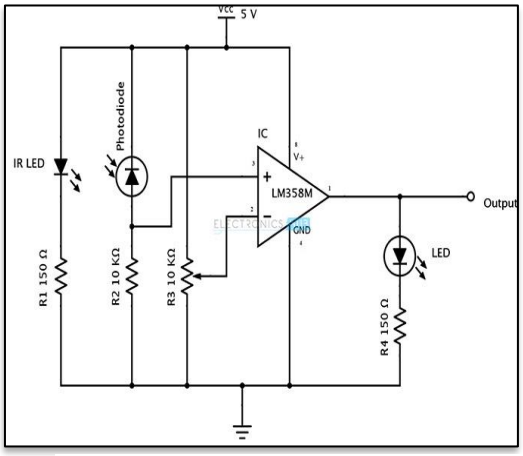

Fig 6.3 : obstacle sensing circuit

6.4 Distinguishing Between Black and White Colors

It is universal that black color absorbs the entire radiation incident on it and white color reflects the entire radiation incident on it. Based on this principle, the second positioning of the sensor couple can be made. The IR LED and the photodiode are placed side by side. When the IR transmitter emits infrared radiation, since there is no direct line of contact between the transmitter and receiver, the emitted radiation must reflect back to the photodiode after hitting any object. The surface of the object can be divided

into two types: reflective surface and non-reflective surface. If the surface of the object is reflective in nature i.e. it is white or other light color, most of the radiation incident on it will get reflected back and reaches the photodiode. Depending on the intensity of the radiation reflected back, current flows in the photodiode.

Fig 6.4 : distinguishing between black and white

7. RESULTS AND DISCUSSION

Table 7: circuit diagram of obstacle detection module

Sr.No.	Components	Quantity
1	9V Battery	1
2	Battery Clip	1
3	Infrared Sensor Module	1
4	Buzzer	1
5	General PCB	As Per Req.
6	Wires	As Per Req.

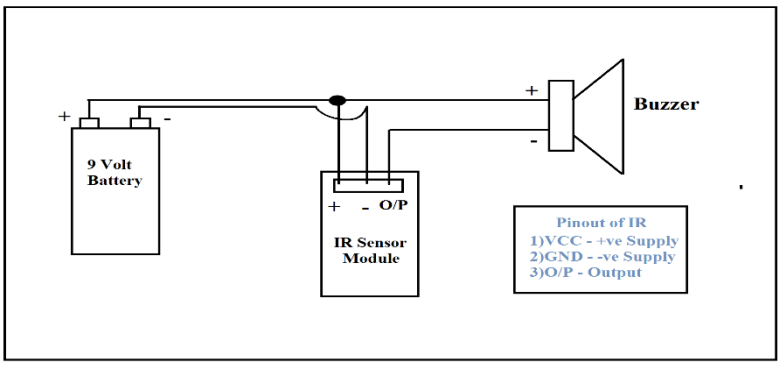

Fig 7: circuit diagram of obstacle detection module

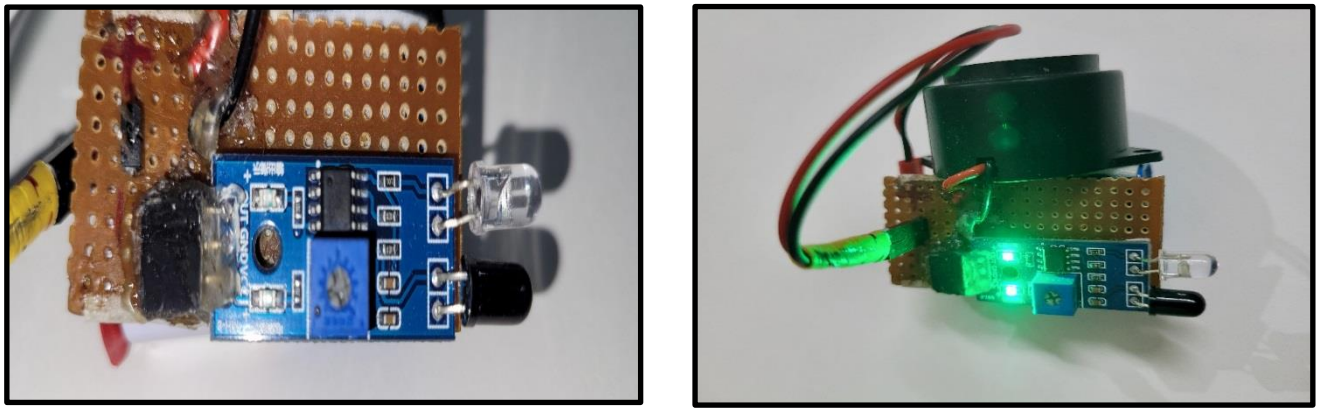

Fig 7.2 : obstacle detection prototype with IR sensor

7.1 Distance Measurement

In this study we take the Infrared sensor for obstacle detection. Figure show the working of the infreared sensors. We keep a flat object in front of the sensor and measure the distance when the code is run. The actual distanceis also measured with the help of a scale and both the distances are compared and a graph given below is plotted.Suppose some obstacle is detected in front of the prototype, the ultrasonic sensor will detect a receiving signal and finds theapproximate distance of the object from the prototype.

7.2 Obstacle Detection

- While experimenting the experiment the buzzer and LED indicator turned ON when any obstacle came in the range of transmitter & receiver.
- When the prototype is attached with barricades around the excavation work,when trucks or any workman came in the range of sensor the buzzer started to give signal interms of alarm.
- While working on the multistorey building,if any works comes in the range of sensor around the unsafe area,sensor gets activated and it started to give warning to the worker interms of alarm to avoid to work near this area.

Table 7.1 : Infrared sensor for Distance measurement

Sr. No.	*Actual Distance (cm)*	*Measured Distance (cm)*	*Percentage error %*
1	*5*	*4.94*	*0.012*
2	*8*	*7.86*	*0.0175*
3	*10*	*9.98*	*0.002*
4	*13*	*13.19*	*0.015*
5	*15*	*14.82*	*0.012*
6	*18*	*18.2*	*0.011*
7	*20*	*20.03*	*0.0015*
8	*23*	*23.17*	*0.007*
9	*25*	*24.97*	*0.0012*
10	*28*	*27.87*	*0.0048*

8. CONCLUSION

This paper presented a simple, cost effective obstacle detection and avoidance system for an object on constrction site. The sensors was employed to detect obstacles along the path of the mobile robot. A degree of accuracy and minimum probability of failure were obtained. The evaluation on the autonomous system shows that it is capable of avoiding obstacles, ability to avoid collision and change its position. It isevident that, with this design more functionality can be added to this design to perform various functions withlittle or no intervention of humans..A compete and reliable sensing system for obstacle detection can benefit a lot from the combined use of multiple types of sensors, especially from theactive-passive combination.

9. FUTURE RESEARCH

The current research study was limited to the building construction industry. This Paper presented the use of Infrared sensor for the detection of obstacle coming towards the protected or unsafe area on the construction site.For the construction of such module we have used the IR sensor which is able to detect the obstacle only when any object is very near to the sensor but infuture,for the use of such system on large construction site we can modify the sensor for the better accuracy and detection.

For the making of such model we have used only 9 V battery DC supply which can drain after some use due to this we can not continue the process of obstacle detection process continuously for which we can modify the power supply system for the continue assessement.The used Buzzer in such a system has the sound volume limited to some distance only which may not be audible to the worker on the construction site for this there is a scope of modification of Buzzer volume capacity.

REFERENCES

[1] Strothotte T., Fritz S., Development of dialogue systems for a mobility aid for blind people: initial design and usability testing. In Proceedings of the Second Annual ACM Conference on Assistive Technologies (Vancouver, BritishColumbia, Canada, April 11 - 12, 1996). Assets '96. ACM Press, New York, NY, 139-144.

[2] T. Mohammad, “Using Ultrasonic and Infrared Sensors for DistanceMeasurement," World Academy of Science, Engineering and Technology, pp. 293-298, 2009.

[3] E. Daniel Wang. Obstacle Avoidance Algorithms and Sensors for Autonomous Robots.

www2.ece.gatech.edu/academic/courses/ece4007/10fall/ECE4007L03/.../ewang9.doc

[4] T. Oomichi, N. Kawauchi and Y. Fuke. 1999.Hierarchy control system for vehicle navigation basedon information of sensor fusion perception depending on 85 measuring distance layer. Proceedings of the International Conference on Field and Service Robotics. pp. 197-201.

[5] G. Grubb, A. Zelinsky, L. Nilsson, M. Rilbe, "3D visionsensing for improved pedestrian safety", IEEE International Symposium on Intelligent Vehicles. (2004) 1912

[6] M. Bai, Y. Zhuang, and W. Wang. Stereovision based obstacle detec- tion approach for mobile robot navigation. In International Conferenceon Intelligent Control and Information Processing (ICICIP), Aug.2010.

[7] Kunsoo H., Park J., Hwang, J. and Hong, D. (2008) A stereo vision-based obstacle detection system in vehicles, Optics, and Lasers in Engineering 46(2), 168-178.

[8] E. Prassler, J. Scholz and P. Fiorini. 1999. Maid: A robotic wheelchair roaming in a railway station. Proceedings of the International Conference on Field and Service Robotics. pp. 31-36.

[9] B. Mustapha, A. Zayegh and R.K. Begg, "Multiple sensor-based Obstacle Detection System ," Proceedings of 4th International Conference on Intelligent and Advanced Systems, ISBN:978-1-4577- 1966-0,Kuala Lumpur, 12-14 June 2012.