JETIR.ORG ISSN: 2349-5162 | ESTD Year : 2014 | Monthly Issue
JOURNAL OF EMERGING TECHNOLOGIES AND INNOVATIVE RESEARCH (JETIR)
An International Scholarly Open Access, Peer-reviewed, Refereed Journal

HOME AUTOMATION BY VOICE RECOGNITION USING ARDUINO MEGA 2560

Dr. T. Nirmal Raj
Assistant Professor, SCSVMV University
tnirmalraj@kanchiuniv.ac.in

B. Charulatha
PG Student of SCSVMV University
charulathabcharu@gmail.com

Abstract - Automation plays a key role in the human lives. Enabling objects in a typical household to be connected to the Internet allow home-owners to remotely monitor and control them. Home automation not only refers to reduce human's day-to-day efforts but also energy efficiency and time saving. The availability of affordable smartphone, micro-controllers and other open-source hardware along with the increasing use of cloud services, has made it possible to develop low-cost smart home security systems. As a combination of commercial interests and government initiatives have made smart homes, smart healthcare, smart cities, and smart transport primary areas of focus for IOT application development. The purpose of this paper is to present a low-cost architecture using a Bluetooth based voice activation control for smart home appliances. A research word proved that the Bluetooth system are faster than wireless and GSM system and it has a ability to transmit data serially up to 3Mbps and physically it ranges from 10m to 100m depending on the type of Bluetooth device. In this project, an inexpensive architecture is proposed for the smart home automation that will utilize an Arduino Mega2560, HC-05 Bluetooth module, LCD, IOT module for monitoring and controlling purpose, Relay and power supply.

I. INTRODUCTION

Home automation allows us to control household electrical appliances like light, door, fan etc. It also provides home security and emergency system to be activated. Home automation not only refers to reduce human efforts but also energy efficiency and time saving. The main objective of home automation and security is to help handicapped and old aged people who will enable them to control home appliances and alert them in critical situations. Main advantages of the Home Automation System are:

1. It reduces installation cost.
2. System Scalability and easy extension.
3. Aesthetical benefits.
4. Integration of mobile devices.

II. RELATED WORKS

Wi-Fi based using Arduino Uno project was developed using the Wi-Fi technology, and for that purpose microcontroller which is used is Arduino Uno. The system has been implemented to control and monitor various appliances, among them, most commonly used are monitoring temperature, detecting fire, the door opened or closed, CCTV monitoring, the brightness of the light and various others.

To give the user access to these monitoring and controlling strategies web-based application was founded, which allows the user to utilize these features after following authentication procedures. The ultimate benefit of using this system is its reduced cost, more authenticated, good accessibility for the remote user and can be controlled from anywhere without any geographical restrictions. In **Wireless Sensors by using mobile technology,** a type of mobile technology has been implemented to cause the monitoring of the home conditions and consumption of power by the appliances. User interface involves the mobile application, which gives the reading according to the type of appliances containing wireless sensors. PCB circuits are used as the central controller of the system and bring together cloud-based data server with the mobile application and the appliances. The ultimate positive outcome of this system is the reduced power consumption, and cost-effectiveness also causes a desirable way of monitoring home and power consumption of the appliances. In **Control Electrical Appliances Using Bluetooth** project work, Home automation is a technological evolving subject, permitting to build smart houses. In a smart home, there is a home area network with all devices interconnected. These devices can be monitored and controlled by the home-owner, and information can be exchanged between them. It permit to improve comfort, security and energy efficiency at home. Energy efficiency management intends to optimize the usage of electrical devices, connecting and disconnecting devices based on real-time price of electricity. Wireless technologies permit to implement the home are network, avoiding the use of additional wires. Wi-Fi, Bluetooth, Zigbee and Z-Wave are

possible options, but Bluetooth Low Energy(BLE) is selected due to the reduced power consumption, low cost and easy connection to tablets and smartphone. In **Controlling Home Appliance Using IOT & Bluetooth**, the smart phone is one of the representative fields of Internet of Things (IOT). The intelligent home system creates the more comfortable, safer and intelligent living environment. It can be resolve the problems facing by the people who have spend less amount of time at home. For the solution of this problem peoples can depends on the automated machines and smart phones. In existing systems users may be confused with the controller to simple operations. These problems are overcome by communication between remote controller and targeted devices. To design a circuit for Internet of Things (IOT), Wi-Fi and Bluetooth technologies are used for controlling home appliances on ARM board by using universal remote controller. The circuit is designed with less complexity, security will be provided in the controlling and with low power by taking advantage of the concept of multiple data fusion technique.

III. PROPOSED SYSTEM

1. CONTROLL OF APPLIANCE:

Appliances can be controlled based on user command or instruction to Bluetooth. All the operations are displayed on the LED.

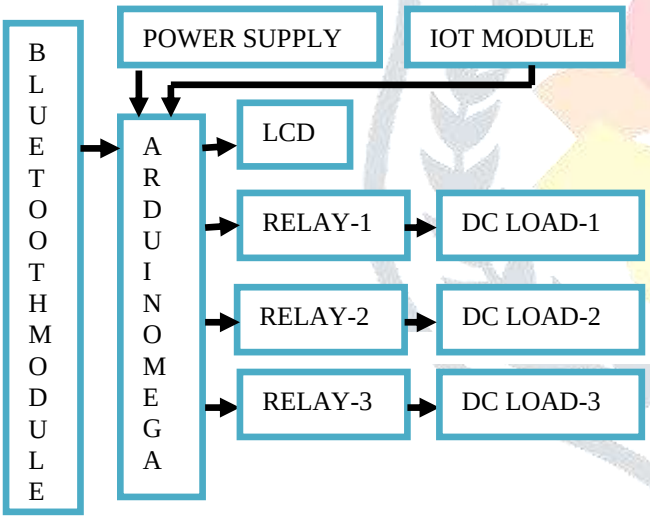

Figure 3: Block Diagram

2. UPDATE IN IOT

The switching of the appliances are monitored and managed through IOT module connected to this device.

OVERALL SYSTEM DESIGN:

In our project, we are combining two things together, hardware and software. As we are coding in the microcontroller and the software we need to be aware of the developing process of the application and the hardware. We have used SDLC (**Systems Development Life Cycle**) method to demonstrate the developing steps of the hardware and the software. We have planned everything in this project in a sequence, so that all the project goals are achieved as required. So, for system design, we have used certain criteria that could combine both software and hardware in an orderly manner. In this chapter, we will describe the tools and skill required to develop a system with the combination of software and hardware.

Figure 4: Prototype for Mobile Application

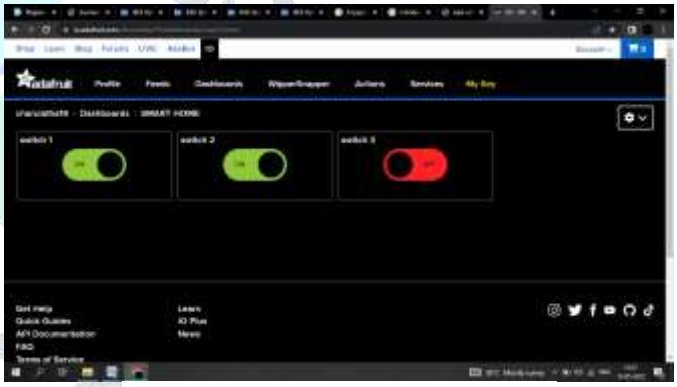

Figure 5: Prototype for Web Application

Arduino Bluetooth Control application (figure 4) shows the prototype of our project, as it clearly mentioned all the buttons that are specified for its operation making the system friendlier for the end users. On top right corner the refresh button is used to connect with the Bluetooth connection of our android phone as well with the Bluetooth module and on the other hand, using the web page like “adafruit” (figure 5) it get connect with the IOT module via Internet. Then go to the voice control option and it start to recognize the voice command like Turn ON the lamp, Turn OFF the lamp, Fan ON, Fan OFF etc,.

IV. ALGORITHM IMPLEMENTATION

Algorithm implementation displays the respective stepwise algorithm of the application, which involves the complete processing of input data from the user, and this data involves the logical sequence that must be followed to make the program work. Following algorithm diagram of our project

shows all the steps that are involved in the complete processing of the application and it also shows the Google voice recognition in the way it is connected to the application, and ultimately to the end spots i.e. Arduino Mega 2560.

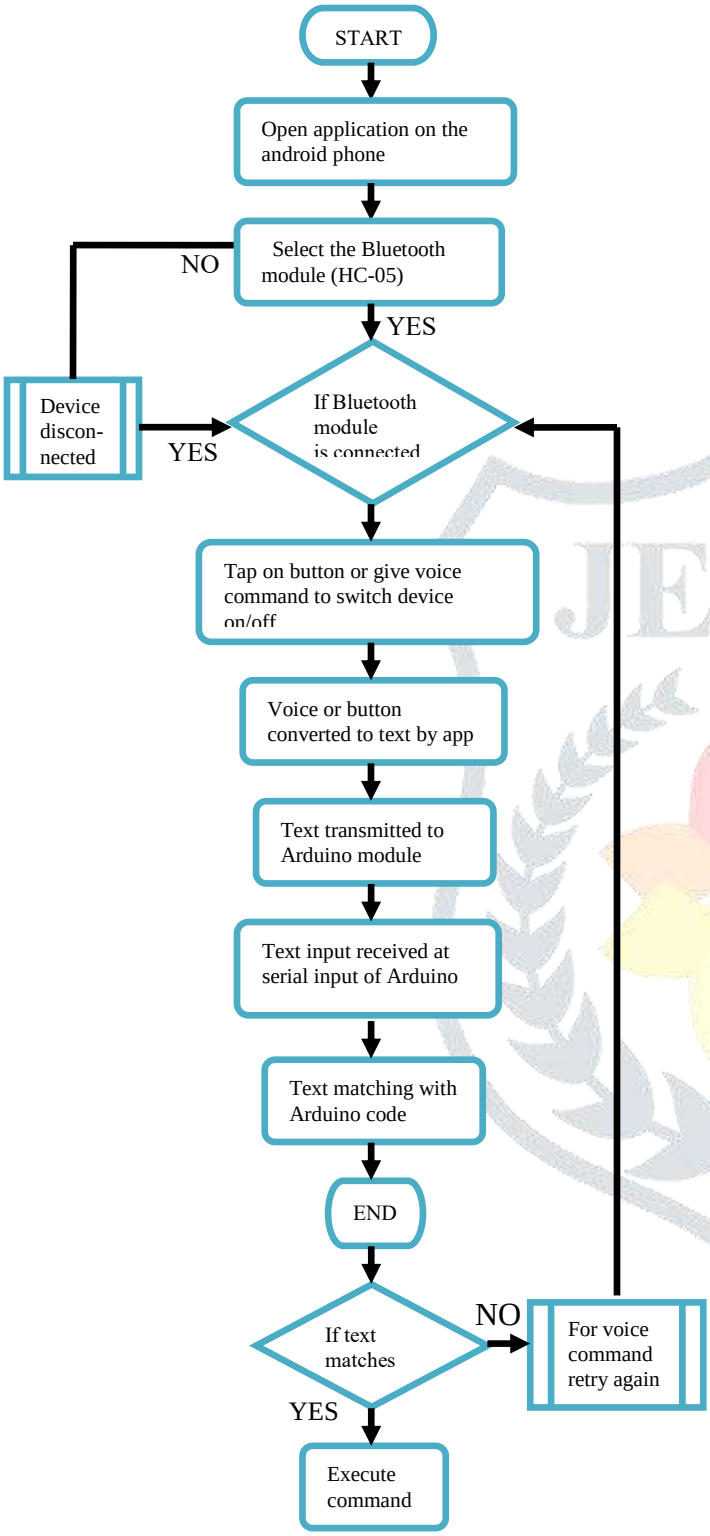

Figure 6: Flow Chart

Here we describe the step by step different functionality we undertook to achieve the end goal in every module with their outputs. As this is the most crucial part of the project and we need to be more conscious than any other parts, we have considered this is the main part of the project. Understanding importance of this phase we have divided it into different steps whilst preparing the implementation process for our voice-controlled home automation project.

Stage one: Components Needed

We required different tools to assemble and different components to combine for the project. We used the following tools and components,

1. ARDUINO MEGA 2560
2. HC-05 BLUETOOTH MODULE
3. IOT MODULE
4. 12 V ADAPTOR
5. LCD
6. JUMPER WIRES
7. RELAY
8. DC & DC LOAD
9. FAN
10. LIGHT

Other than these tools and components we also require some software to code and debug the code after writing.

For coding the Arduino Uno microcontroller we used **"ARDUINO IDE"**, for the mobile application we used the built-in app called **"ARDUINO BLUECONTROL"** and also we use the web application called **"ADAFRUIT"**.

Stage Two: Functionality

This project makes the change in our daily life. It does not require to-go-to the switchboard in a room to turn on/off the lights or probably the fan. All that a person need is a mobile that is connected to the internet and the voice.

The user turns on the mobile and brings up the application that is created and says, "Light on" then the lights go on or maybe if he says, "lights off" then the lights goes off. This is the way we can control the home utilities through our voice commands.

Stage three: Wiring and Circuited

We will first connect the Bluetooth module to the Arduino mega (if we want we can use the ethernet shield to the Arduino mega, but for the demonstration purpose now we are using Bluetooth module HC-05), as the Bluetooth uses the SPP (Serial Port Protocol), we are using the RX and the TX pins of the microcontroller board Arduino Mega. Usually, the Pin 2 and pin 3 are RX and TX pins respectively. Next thing we will do is connect the relay board to the Arduino UNO. As we are using the relay board that is already made (relay board can be manual) with 4 channels, now it is time to connect the inputs for every relay to the Arduino mega.

Now, we are required connect the home utilities to the Arduino Uno. The Arduino mega 2560 is a microcontroller board based on the ATmega2560. It has 54 digital I/O pins (of which 14 can be used as PWM outputs), 16 analog inputs, 4 UART's(hardware serial ports), a 16 MHz crystal oscillator, a USB connection, a power jack, an ICSP header, and a reset button. It contains everything needed to support the microcontroller; simply connect it to a computer with a USB cable or power it with a AC-to DC adapter or battery to get started.

Stage Four: Application

- Our project will help people to turn on/off the appliances remotely from far without getting up from their seat, using a smartphone.

- We can connect this functionality to internet so that anyone from far away can also control, but this might be another challenge regarding the security issue
- The main objective is to monitor & control the safety for the elderly and disable people.
- The project can be expanded further by using sensors like, safety sensors, sound sensors etc. we also can use those sensors to control room temperatures maybe light brightness for night and daytime.

Stage Five: Assembling Arduino and home utilities

Now we need to discuss the assembling of the Arduino mega and the home appliances. We used a relay board that is 12v or 5v to control the high voltage utilities. Relay board allow the Arduino mega to control the electric flow electrically, some says it as an electric switch, as it is controlled electrically. We can install our Arduino mega in the main electric switchboard in the home and configure the Arduino accordingly.

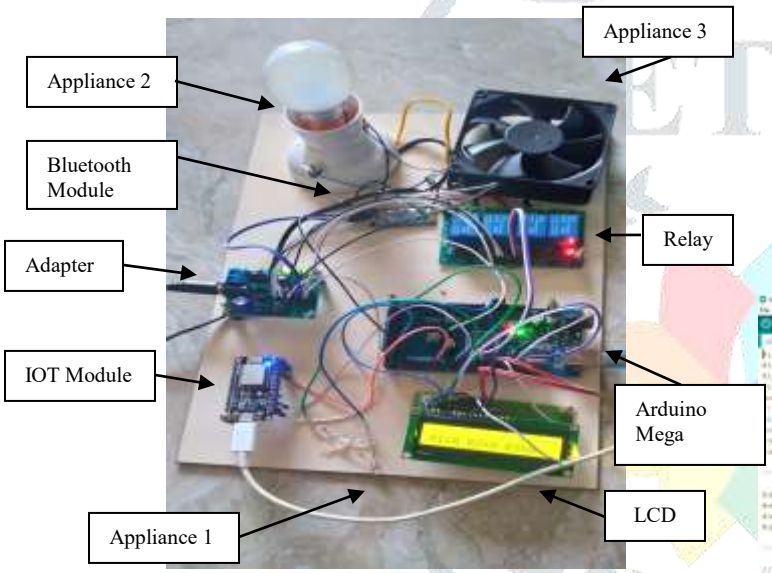

Figure 7: Experimental Setup

Stage Six: External Power

We have used the 12v battery for the power supply. As this system will require having a continuous flow of electricity we need electric supply and battery supply.

Stage Seven: Code Description

For the purpose of our system, we have to code two different things.

Hardware- Arduino mega

Software – Application to convert the voice to text and send through Internet/Bluetooth.

Hardware- Arduino Uno

In Arduino mega, we have coded in C Language. C language is a very hardcore language that is easily be coded in hardware. We have added loops that "if" our voice is not matched to specific parameter then the hardware will ignore it and go to check for the next loop. For the system to run efficiently we used eight loops to keep the flow of the code.

```
while (Serial3.available() > 0) {
  char c = (char)Serial3.read(); {
   switch (c) {
   case '1': {
     state1 =1;
     digitalWrite(5, state1); //relay1
     break; }
   case '2': {
     state1 = 0;
     digitalWrite(5, state1); //relay1
     break; }
   case '3': {
     state2 = 1;
     digitalWrite(6, state2); //relay2
     break; }
   case '4': {
     state2 = 0;
     digitalWrite(6, state2); //relay2
     break; }
   case '5': {
     state3 = 1;
     digitalWrite(7, state3); //relay3
     break; }
   case '6':{
     state3 = 0;
     digitalWrite(7, state3); //relay3
     break;
    } } } }
```

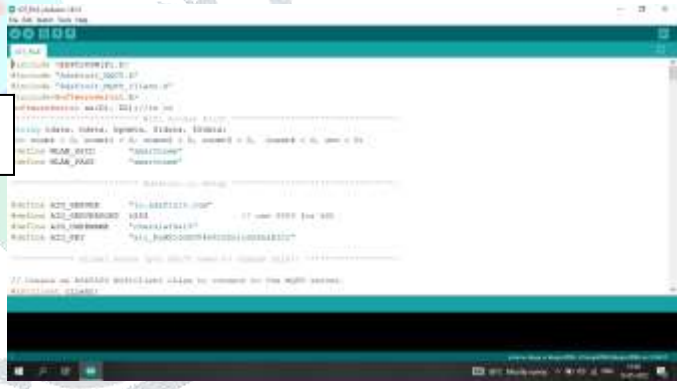

Figure 8:Coding Interface

Here is a part of the code that is showing the logical part of the algorithm. If the voice is "LED on" / "Lamp on"/ "Fan on" then the pin 1/3/5 will be on or otherwise, I set the code so that when the code runs through the process it looks at each and every line to match with the string that has been passed from the mobile application through Bluetooth.

The Arduino code basically gets the string command from the application and then if the string is matched with the variables that are set then it executes or it turns on or turns off the pin that is assigned in the Arduino command.

SOFTWARE APPLICATION

We used "ARDUINO BLUECONTROL APP" that we used to take usage of Google voice recognition and then convert the voice to text and send to the Arduino Uno via Bluetooth or internet.

Stage Eight: Testing

After designing and developing the application it is time to test whether or not the application and the system are working well or not. After assembling the hardware and connecting my mobile to the Arduino Uno we have tested that the hardware is working. After saying "fan on" the fan was operating. Thus, we can say that the system is running perfectly fine.

Stage Nine: Limitations

As the system, we are using we need the system to be in the continuous flow of power supply or else we will fail to gain what we are trying to achieve. This is also a problem in third world countries like Bangladesh, Nepal or maybe some African countries. As they do not have the continuous flow of electricity supply we probably will be lacking this advantages of using this system.

This system can only have controlled via voice, but it would be better to add or combine the manual system of turning lights on/off.

Stage Ten: Finalizing

After finishing all the stages, we can see that the system is working properly, and everything is fine, so we take have come to a decision that the system works perfectly fine. We also added lights, heater and fan to see that the system is working. As we call out on the application "LED on/off" / "light on/off" / "fan on/off" all these three, home appliance works.

RESULT

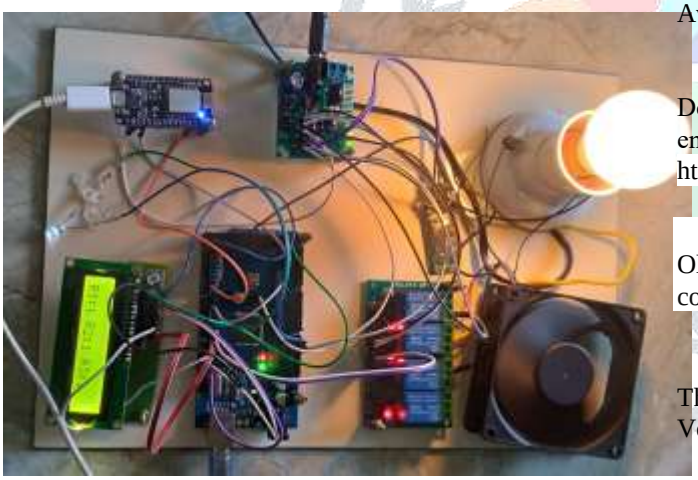

Figure 9: Final Result

After finishing the code and completing the setup, the home utilities are functioning properly as shown in the above figure. The Bluetooth module receive the user command and execute it, as well as the IOT module too works finely. The IOT module get updated command of user from the Bluetooth module via internet.

V. CONCLUSION AND FUTURE WORK

A. CONCLUSION

Voice based home appliance controller system is developed based on referring and modification to the proposed system designed by the researchers. The Arduino Mega is successfully fabricated and place on the physical device even though the size of Arduino mega is quite big. The controlling commands or instructions are successfully trained for the voice recognition module and the Arduino mega is acts as a processor that it process the input received by the voice recognition module and give out the output of the physical device. By doing this project, I get the practical work experience with the Arduino Mega 2560, Bluetooth module, Internet of Things(IOT), and so on.

B. FUTURE WORK

In future we will add multiple regional languages for voice module recognition to make the system user friendly. The Wireless sensor networks using 433 MHz Transmitter(Tx) & Receiver(Rx) can also be implemented for future.

Other features such as biometrics can also be added, so that unauthorized persons cannot have access to the appliances and an also timing schedule can developed for each appliance connected this will effectively conserve energy.

VI. REFERENCES

[1] Ilyas Baig, Chiktay Muzamil, Salahuddin Dalvi, "Home Automation Using Arduino Wifi Module ESP8266," Available: https://core.ac.uk/download/pdf/55305294.pdf.

[2] Jay P. Sipani, Riki H. Patel, Trushit Upadhyaya, Arpan Desai, "Wireless sensor network for monitoring & control of environmental factors using Arduino," Available: https://doi.org/10.3991/ijim.v12i2.7415.

[3] Aduragbemi Oke, John Conscience Ehiabhili, Olusayo Olubosede, "An android based home electrical appliance control system," 10.46792/fuoyejet.v5i2.528, Sep. 2020.

[4] Olutosin Taiwo and Absalom E. Ezugw, "Internet of Things-Based Intelligent Smart Home Control System", Volume 2021, Article ID 9928254, 24 Sep 2021.

[5] Mandira Das, Pritam Das, Sandip Das, Esha Biswas, "IOT based home automation system", 2020, RCCIIT.

[6] Priyanka Sharma1 , Vishakha Agarwal2 , Tanmay Nayyar3 , Tarun Awasthi, "Bluetooth home automation system", Vol-5, Issue-5, Sep-Oct, 2021.

[7] Vedant S. Mane, Mihir M. Pandharipande, Hrushikesh J. Joshi, Soham S. Kotalwar, "Manual, Internet and Bluetooth all-in-one smart home", 2021 International Conference on Computational Intelligence and Knowledge Economy (ICCIKE), doi. 10.1109/ICCIKE51210.2021.9410775

[8] Cristina Stolojescu-Crisan, Calin Crisan, and Bogdan-Petru Butunoi, "An IOT based smart home automation system," 2021 May 30. doi: 10.3390/s21113784.

[9] Sk. Fahmida Islam, Md. Iqramul Hasan, Morium Akter, Mohammad Shorif Uddin, "Implementation and Analysis of an IoT-Based Home Automation Framework," Vol.9 No.3, March 2021, DOI: 10.4236/jcc.2021.93011.

[10] Adesh Bansod , Shivani Burade, Mitali Khidkikar, Vaishnavi Chawde, Nagma Sheikh, "Touch Switches and Advance Flexible Home Automation System based on IoT," Vol. 9, June 2021 DOI10.17148/IJIREEICE.2021.9614.

[11] E. A. Felix and S. P. Lee, ''Systematic literature review of preprocessing techniques for imbalanced data,'' IET Softw., vol. 13, no. 6, pp. 479–496, Dec. 2019.

[12] M. TRIMARCHI. How the Duke Smart Home Works. Accessed: Feb. 1, 2020. [Online]. Available: https://science.howstuffworks.com/ environmental/green-tech/sustainable/duke-smart-home.htm **.**

[13] S. J. Darby, ''Smart technology in the home: Time for more clarity,'' Building Res. Inf., vol. 46, no. 1, pp. 140–147, Jan. 2018.

[14] J. Leitao, P. Gil, B. Ribeiro, and A. Cardoso, ''A survey on home energy management,'' IEEE Access, vol. 8, pp. 5699–5722, 2020.

[15] Y. Kabalci, E. Kabalci, S. Padmanaban, J. B. Holm-Nielsen, and F. Blaabjerg, ''Internet of Things applications as energy internet in smart grids and smart environments,'' Electronics, vol. 8, no. 9, p. 972, Aug. 2019.

[16] A. Tundis, A. Faizan, and M. Mühlhäuser, ''A feature-based model for the identification of electrical devices in smart environments,'' Sensors, vol. 19, no. 11, p. 2611, Jun. 2019.

[17] P. Franco, J. M. Martinez, Y.-C. Kim, and M. A. Ahmed, ''IoT based approach for load monitoring and activity recognition in smart homes,'' IEEE Access, vol. 9, pp. 45325–45339, 2021.

[18] D. Geneiatakis, I. Kounelis, R. Neisse, I. Nai-Fovino, G. Steri, and G. Baldini, ''Security and privacy issues for an IoT based smart home,'' in Proc. 40th Int. Conv. Inf. Commu. Technol., Electro. Microelectron., Opatija, Croatia, May 2017, pp. 1292–1297, doi: 10.23919/MIPRO.2017.7973622.

[19] M. TRIMARCHI. How the Duke Smart Home Works. Accessed: Feb. 1, 2020. [Online]. Available: https://science.howstuffworks.com/ environmental/green-tech/sustainable/duke-smart-home.htm.