JETIR.ORG ISSN: 2349-5162 | ESTD Year : 2014 | Monthly Issue
JOURNAL OF EMERGING TECHNOLOGIES AND INNOVATIVE RESEARCH (JETIR)
An International Scholarly Open Access, Peer-reviewed, Refereed Journal

# Hybrid Energy Storage System Integrating Lithium-ion Battery and Supercapacitor For Electric Vehicle Applications

**[1]Bare Lal Bamne, [2]Prof. Priyank Gour**
[1]M.Tech Scholar, [2]Assistant Professor & HOD
Department of Electrical & Electronics Engineering
SCOPE College of Engineering, Bhopal, India

***Abstract :*** The primary problems of cars and trucks that run on oil or diesel are global warming and the scarcity of fossil resources. The electric vehicles (EVs) are alternative of the conventional vehicle. Electric vehicles (EVs) depend on energy from energy storage systems (ESS). Their biggest shortcomings are their short driving range and lengthy battery recharge times. For use with electric car applications, this study describes a hybrid energy storage device that combines a lithium-ion battery with a supercapacitor. MATLAB Simulink 9.4 software is used to run the simulation. Simulated findings demonstrate that the suggested approach produces noticeably improved outcomes.

***IndexTerms* – EV, Ultracapacitors/Supercapacitors, Battery Charger, Power, Capacity, ESS, Current, Voltage.**

## I. INTRODUCTION

The collection of techniques and technologies used to store energy is known as an energy storage system. The energy that has been saved may be used later to carry out beneficial tasks. For instance, many renewable energy sources, such wind, sun, or tides, are sporadic. When the energy is accessible, the use of renewable energy is sometimes indirect, but there are other occasions as well. So that energy may be utilised when required, we also need energy storage. There are many different types of energy, including kinetic, chemical, gravitational potential, increased temperature, and latent and sensible heat.

The key benefits of hybridization are improved fuel efficiency, a more adaptable operating strategy, elimination of transient and cold-start issues with fuel cells, and lower cost per unit of power. Few studies on the electronic interfaces of EVs and HEVs have been published in the literature. Due to the fact that all switches were turned on using zero voltage switching (ZVS), the converter for electric vehicles has a high efficiency. It does not, however, have a bidirectional port. Therefore, it cannot be utilised in applications that need ESS.

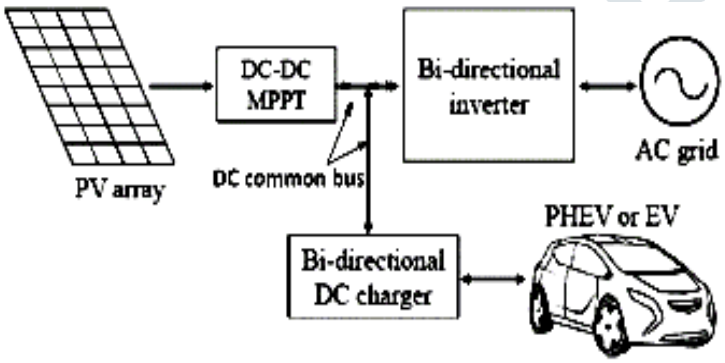


Figure 1: PV based charger

For independent PV systems, a small two-input converter for electric vehicles is available. The converter for an electric car is also appropriate for low input voltage situations due to its high voltage gain. However, the efficiency is decreased by the abundance of semiconductors and passive components. The power flow between renewable resources, the battery, and the electrical motor should be controlled by a control technique established in the vehicle's controller.

The PV-based energy storage system for recharging electric vehicles is shown in Figure 1. The major responsibilities of the control system are to operate the fuel cell and PV panel in their optimal area and to ensure that energy resources are used as efficiently as possible. Recently, a converter for PV systems has been suggested for use with electric cars. However, the converter needed for HEV applications in electric vehicles should draw electricity from PV and FC. Additionally, a bidirectional port is required to charge and discharge the battery in accordance with the disparity between produced power and desired energy in order to offer backup power from the battery. An electric vehicle's multi input converter (MIC) may provide power to the load from many energy sources either concurrently or separately. The MPPT algorithm must be used due to the high initial cost of PVs and to enhance the amount of electricity collected from the PV panels.

## II. PROPOSED MODEL & METHODOLOGY

The proposed model and methodology description is as following-

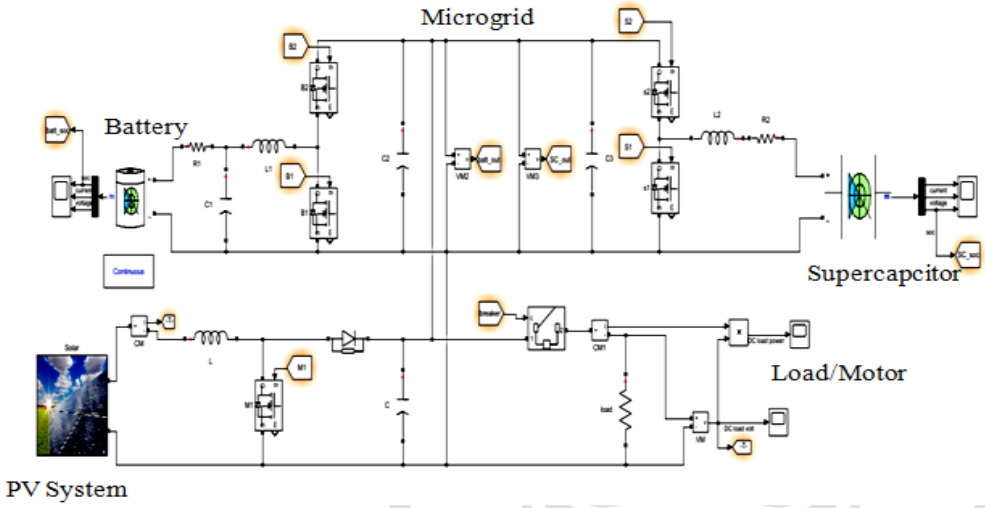


Figure 2: Proposed Model

Figure 2 is showing present HESS EV model. This model consist various sub models which is described in details.

**Solar Power-**

Photovoltaic solar panels use the energy they capture from the sun to produce electricity. 96 solar cells are packaged and connected into a photovoltaic (PV) module. The photovoltaic array of a photovoltaic system, which produces and provides solar power for commercial and residential uses, is made up of photovoltaic modules. The core power conversion component of a PV generating system is the photovoltaic (PV) array, which is made up of modules.

**MPPT Techniques**

With wind turbines and photovoltaic (PV) solar systems, the maximum power point tracking approach is often employed to optimise power extraction under all circumstances. Maximum power point tracking (MPPT) is an algorithm used in photovoltaic (PV) inverters to continuously adjust the impedance seen by the solar array in order to maintain the PV system's performance at, or relatively close to, the peak power point of the PV panels under varying conditions, such as changing solar irradiance, temperature, and load. PV system controller designs often use MPPT algorithms.

DC-DC Transverse Capacitor In a renewable energy system, a bidirectional dc to dc converter is a crucial component for connecting the storage devices between the source and the load to ensure a constant flow of electricity. Bidirectional converters are also used in electric cars to transfer power from the battery to the motor. By employing a particular switching technique and phase-shifted control approach, bidirectional dc to dc converters may regulate the flow of power in both directions between two dc sources and a load. As a result, surplus energy is created and can be stored in batteries or super capacitors.

**Battery**

A battery is a device that has at least one electrochemical cell and is used to power electrical devices like flashlights, mobile phones, and electric cars. A battery's positive terminal serves as the cathode and its negative terminal serves as the anode while it is generating electricity. The source of electrons that will flow via an external electric circuit to the positive terminal is the terminal that is marked negatively. When a battery is linked to an electrical load outside of it, reaction transforms high-energy reactants into lower-energy products, and the difference in free energy is transferred as electrical energy to the outside circuit. Clearly, the term "battery" originally referred to a device made up of many cells, but its use has now expanded to include devices constructed out of a single cell.

**Ultra-High Capacitor**

A supercapacitor (or ultra capacitor) differs from a standard capacitor in two key ways: its plates successfully have a much higher surface area and the space between them is much less because the separator between them functions differently than a traditional dielectric. Despite the fact that the terms "supercapacitor" and "ultracapacitor" are commonly used interchangeably, there is a difference: since they are typically made from different materials and arranged in somewhat different ways, they store different amounts of energy.

## III. SIMULATION RESULTS

The design and analysis of the proposed model is performed using MATLAB software with version 9.4.

**Battery Discharging Mode-** When the battery is fully charge then it supplies the power to the load or motor, so battery is in the discharging mode.

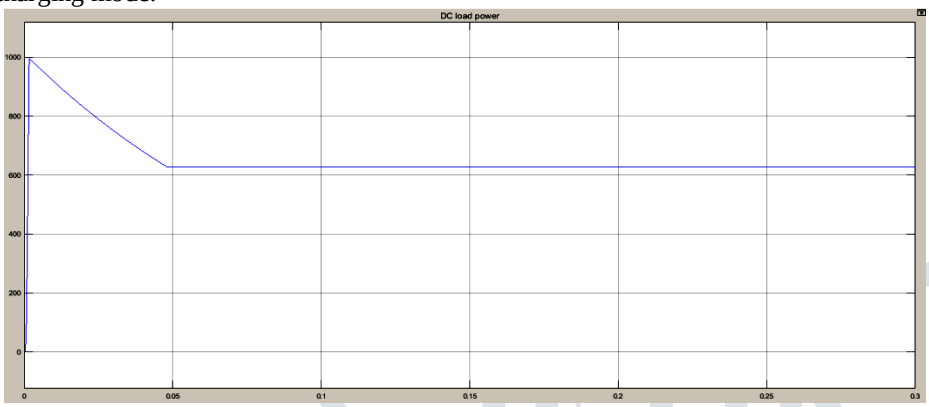


Figure 3: DC Load Power

Figure 3 is presenting the DC load power graph. The value of the DC load power is 630W

.

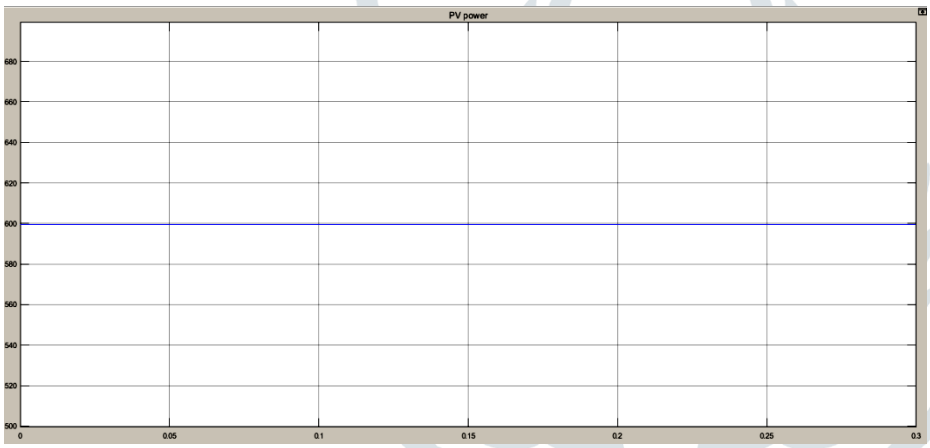


Figure 4: Solar Power

Figure 4 is presenting the solar power graph. The collected solar power value is 600W.

**Load Shedding Mode (LSM)-** When the battery is fully discharge then the load is disconnected and battery is stop giving the power to the load.

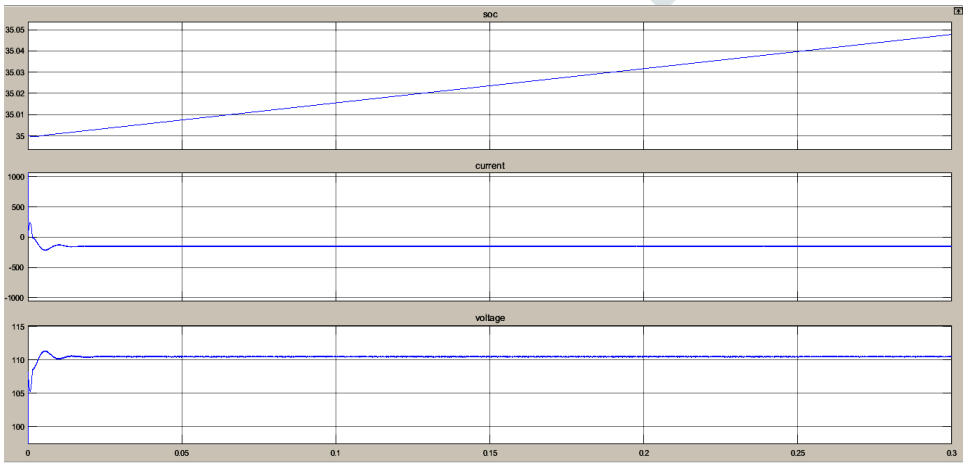


Figure 5: Battery Performance

Figure 5 is presenting the performance of the battery in terms of the state of charge, voltage and current. At the load shedding mode the state of charge of the battery is approx 30%.

**Battery Charging Mode-** As the battery is fully discharged, and then the solar power is start to charge the battery. Now battery charges up to the more than 80%

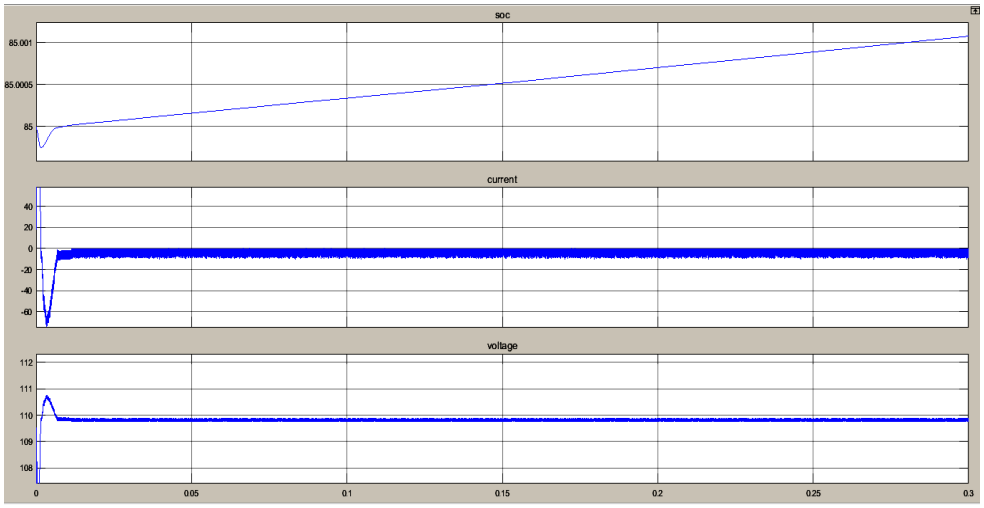


Figure 6: Battery performance

Figure 6 is presenting the battery performance during the charging state. The battery is charging and as completed charge, its start to give power to the load or motor.

**Off-MPPT Mode-** When the battery is fully charges then the MPPT is off. MPPT is used to track maximum power in the less time. After completion it off and when battery is discharge then it again present in the ON state.

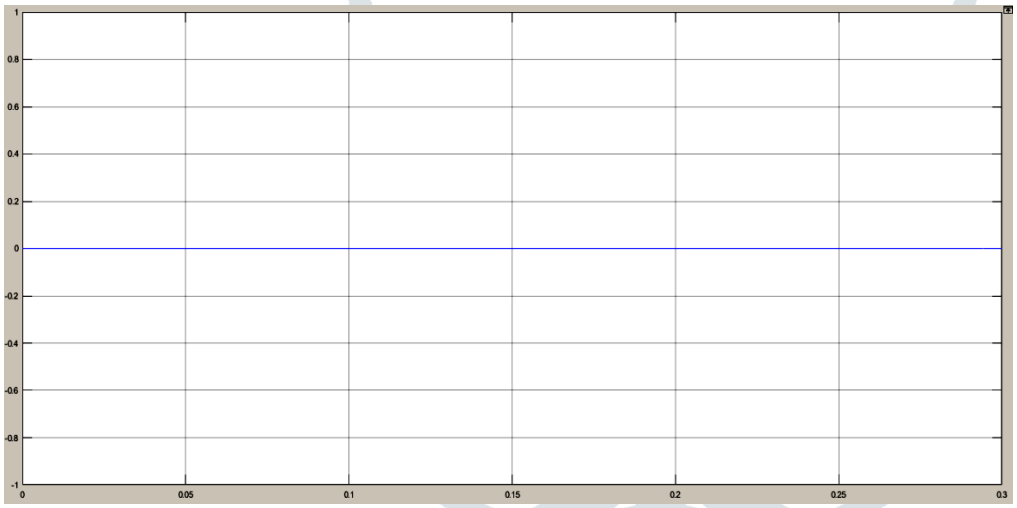


Figure 7: MPPT output

Figure 7 is presenting the MPPT output, at the mode of off MPPT; it shows at the 0 state.

Table 1: Result Comparison

| Sr No. | Parameters | Previous Work | Proposed Work |
|---|---|---|---|
| 1 | State of Charge (SOC) | 80% | 95% |
| 2 | Lithium-ion battery output voltage | 4V | 12 V |
| 3 | Temperature ($^0$C) | 43 | 35 |
| 4 | Battery Current | 60A | 100A |
| 5 | Renewable Source | NA | Solar |
| 6 | Control technique | Particle Swarm–Nelder–Mead | MPPT |

Table 1 is presenting the result comparison of the previous and the proposed model simulation results. The overall state of the charge of the battery and the super capacitor is approx 95%, while previous it is 80%. The battery current achieved is 100A while previous it is 60A. Proposed model using the solar system to collect the power while in the previous work, it's not mention. The proposed model used MPPT control technique; which is less complex than the previous model control technique. Therefore proposed model is better than the previous model based on the simulation results.

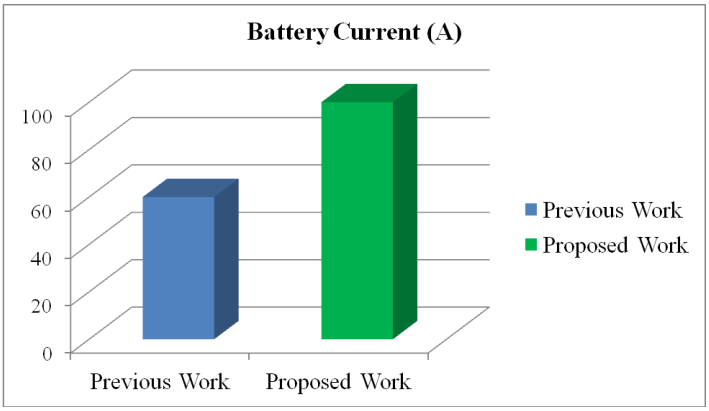


Figure 8: Result comparison

## IV. CONCLUSION

This research provides a hybrid energy storage device for electric vehicle applications that combines a supercapacitor and lithium-ion battery. Chemical batteries and ultracapacitors/supercapacitors are the two complementary energy sources that make up an electric vehicle storage system. In a hybrid energy storage system (HESS), utilizing ultra capacitors extends the additional storage capacity. Software called MATLAB/SIMULINK is used for simulation. The performance of the current model has significantly improved over that of the previous model, according to simulation findings.

## REFERENCES

1. T. Mesbahi, P. Bartholomeüs, N. Rizoug, R. Sadoun, F. Khenfri and P. L. Moigne, "Advanced Model of Hybrid Energy Storage System Integrating Lithium-Ion Battery and Supercapacitor for Electric Vehicle Applications," in IEEE Transactions on Industrial Electronics, vol. 68, no. 5, pp. 3962-3972, May 2021, doi: 10.1109/TIE.2020.2984426.
2. M. A. Islam et al., "Modeling and Performance Evaluation of ANFIS Controller-Based Bidirectional Power Management Scheme in Plug-In Electric Vehicles Integrated With Electric Grid," in IEEE Access, vol. 9, pp. 166762-166780, 2021, doi: 10.1109/ACCESS.2021.3135190.
3. S. Chai et al., "An Evaluation Framework for Second-Life EV/PHEV Battery Application in Power Systems," in IEEE Access, vol. 9, pp. 152430-152441, 2021, doi: 10.1109/ACCESS.2021.3126872.
4. X. Zan, G. Xu, T. Zhao, R. Wang and L. Dai, "Multi-Battery Block Module Power Converter for Electric Vehicle Driven by Switched Reluctance Motors," in IEEE Access, vol. 9, pp. 140609-140618, 2021, doi: 10.1109/ACCESS.2021.3119782.
5. A. Avila, M. Lucu, A. Garcia-Bediaga, U. Ibarguren, I. Gandiaga and A. Rujas, "Hybrid Energy Storage System Based on Li-Ion and Li-S Battery Modules and GaN-Based DC-DC Converter," in IEEE Access, vol. 9, pp. 132342-132353, 2021, doi: 10.1109/ACCESS.2021.3114785.
6. T. Sadeq, C. K. Wai, E. Morris, Q. A. Tarbosh and Ö. Aydoğdu, "Optimal Control Strategy to Maximize the Performance of Hybrid Energy Storage System for Electric Vehicle Considering Topography Information," in IEEE Access, vol. 8, pp. 216994-217007, 2020, doi: 10.1109/ACCESS.2020.3040869.
7. Y. Fan et al., "Evaluation Model of Loop Stray Parameters for Energy Storage Converter of Hybrid Electric Locomotive," in IEEE Access, vol. 8, pp. 212589-212598, 2020, doi: 10.1109/ACCESS.2020.3039343.
8. D. Qin, Q. Sun, R. Wang, D. Ma and M. Liu, "Adaptive bidirectional droop control for electric vehicles parking with vehicle-to-grid service in microgrid," in CSEE Journal of Power and Energy Systems, vol. 6, no. 4, pp. 793-805, Dec. 2020, doi: 10.17775/CSEEJPES.2020.00310.
9. C. Zhai, F. Luo and Y. Liu, "A Novel Predictive Energy Management Strategy for Electric Vehicles Based on Velocity Prediction," in IEEE Transactions on Vehicular Technology, vol. 69, no. 11, pp. 12559-12569, Nov. 2020, doi: 10.1109/TVT.2020.3025686.
10. M. Ban, D. Guo, J. Yu and M. Shahidehpour, "Optimal sizing of PV and battery-based energy storage in an off-grid nanogrid supplying batteries to a battery swapping station," in Journal of Modern Power Systems and Clean Energy, vol. 7, no. 2, pp. 309-320, March 2019, doi: 10.1007/s40565-018-0428-y.
11. X. Hou, J. Wang, T. Huang, T. Wang and P. Wang, "Smart Home Energy Management Optimization Method Considering Energy Storage and Electric Vehicle," in IEEE Access, vol. 7, pp. 144010-144020, 2019, doi: 10.1109/ACCESS.2019.2944878.
12. B. Wang, X. Zhang, U. Manandhar, H. B. Gooi, Y. Liu and X. Tan, "Bidirectional Three-Level Cascaded Converter With Deadbeat Control for HESS in Solar-Assisted Electric Vehicles," in IEEE Transactions on Transportation Electrification, vol. 5, no. 4, pp. 1190-1201, Dec. 2019, doi: 10.1109/TTE.2019.2939927.
13. H. Moradisizkoohi, N. Elsayad and O. A. Mohammed, "Experimental Verification of a Double-Input Soft-Switched DC–DC Converter for Fuel Cell Electric Vehicle With Hybrid Energy Storage System," in IEEE Transactions on Industry Applications, vol. 55, no. 6, pp. 6451-6465, Nov.-Dec. 2019, doi: 10.1109/TIA.2019.2937288.
14. Q. Xu, F. Wang, X. Zhang and S. Cui, "Research on the Efficiency Optimization Control of the Regenerative Braking System of Hybrid Electrical Vehicle Based on Electrical Variable Transmission," in IEEE Access, vol. 7, pp. 116823-116834, 2019, doi: 10.1109/ACCESS.2019.2936370.