JETIR.ORG ISSN: 2349-5162 | ESTD Year : 2014 | Monthly Issue
JOURNAL OF EMERGING TECHNOLOGIES AND INNOVATIVE RESEARCH (JETIR)
An International Scholarly Open Access, Peer-reviewed, Refereed Journal

PMU DATA BASED FAULT DETECTION TECHNIQUE USING A RBFNN

Bommidi Sujatha
Post graduate student
Dept. of Electrical and Electronics
Sri Venkateswara University Tirupati, India sujathabommidi9@gmail.com

Dr. A. Lakshmi Devi
Professor
Dept. of Electrical and Electronics
Sri Venkateswara University Tirupati, India
energylak123@yahoo.com

Abstract:

Classification and location of faults are the most challenging jobs in power system networks. This paper explores the fault location and its classification in a practical 5 bus IEEE 9 Bus by using PMU data. Bus associated with the fault, and location of this fault in a branch is computed using wavelet analysis. Radial Basis Function Neural Networks (RBFNN) technique is used as a hybrid model, from wavelet energy entropy (WEE), it applies Daubechies (Db4) where training and testing data were taken from the wavelet coefficients. From the 5 Bus power system and IEEE 9 Bus transmission system, analyzed and computed real time Phasor Measurement Unit (PMU) data are trained and tested using artificial neural networks for determining fault classification, fault detection and fault inception angle.

Keywords: Phasor Measurement Unit (PMU), Radial Basis Function Neural Networks (RBFNN), Wavelet Energy Entropy (WEE), Daubechies (Db4), 5 Bus power system and IEEE 9 Bus.

I.INTRODUCTION

The main strategy of the electrical power system network is to contribute uninterrupted power supply to the world. Moreover, fault identification and categorization on transmission lines are challenging tasks. Negligence over fault detection points to failure of the electrical power system. Fault detection for one or two ended data transmission lines is computed by PMU data.Previously, three-phase and one-phase transmission lines with two sources were tested in PSCAD [1]. A Global Positioning System clock is used to synchronize sampling of voltage and current signals at both the ends of the transmission line [2]. For a sapid detection, wavelet-site detection parameters are formulated with commission of non-stationary attributes of events. Depending on the wavelet interpretation of these measurements, the signal features can be released by casting the maximum wavelet transform coefficients (WTCs) and further processing them with a new fusion clustering algorithm [3]-[5].

PMU is used to convert voltage and current waves into phasors, magnitude, and angles of energy and current to protect the fault site from a three-phase short circuit [4]. Multi-planning of ANN is examined with the statistical attributes of a wavelet transform of a voltage wave as input factors and binary integers as outputs [6]. The implementation of radial basis function (RBF) neural networks for fault categorization and position in transmission lines is employed and instantaneous current/voltage representatives were used as inputs to artificial neural networks (ANNs) [7]. Analyzed and computed real time Phasor Measurement Unit (PMU) data are trained and tested using artificial neural networks for determining fault classification, fault position and fault inception angle [8].

To enhance the fault detection, new techniques have to be implemented. Fault identification and categorization for increased buses using wavelet analysis is a lagging process, i.e. analysis is a lagging process, i.e. as the amount of buses rises and its computational time also increases. So, to improve the efficiency of performance in fault detection and classification, ANN based technique i.e. Radial Basis Function Neural Network (RBFNN) is proposed.

Hence, the principal objective of this proposed method is as follows.

1. To analyze and compute the fault data within a less span of time.
2. To alleviate faults severity in an electrical power system grid.
3. To retain a balanced voltage and current in a network by rectifying faults and its inception angle.
4. To detect the types of faults through binary digits and its inception angle.

II.DISCRETE WAVELET TRANSFORM

Fig. 1 shows a multiple level decomposition of the signal using DWT [9]. Wavelets are used to determine the short and fast transients in voltage or current. Each current signal or voltage signal has energy in it,now to distinguish between fault current and normal current, different daubechies are used, where fault current will

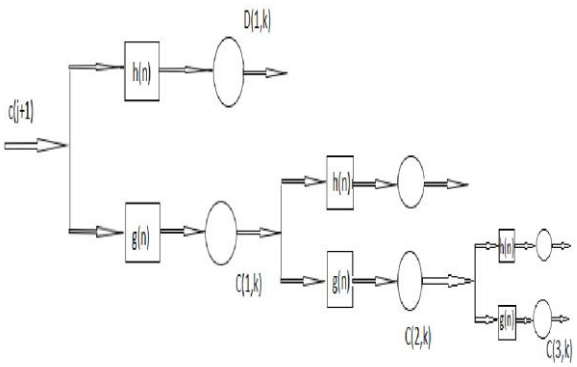

Fig.1:Multiple level decomposition of the signal using DWT

have high energy in it, and it will reach many daubechies whereas normal current will not go to those high levels of daubechies. Therefore, higher the daubechies level, higher will be the chances of fault current.

The basic principle of DWT is determining how to obtain the timing and scale representation of a signal using a digital preservation technique and sub-sampling operation. The coefficient of DWT of a wave can be obtained by applying the DWT as given by the equation:

$$\mathbf{DWT}(\square,\square,\square) = \frac{1}{\sqrt{\square_0^{\square}}}\sum \quad \square(\square)\square^{*}\left(\frac{\square-\square\square_0^{\square}}{\square_0^{\square}}\right) \qquad [1]$$

where, a_0^m and ka_0^m are the scaling and translational constant respectively and Ψ is the mother wavelet. Where k and m are positive integer variables.

III. PHASOR MEASUREMENT UNIT

A Phasor Measurement Unit, besides known as synchrophasor or a PMU, is a crucial tool used on electric-powered systems to enhance engineer observation into what is occurring in every part of the extensive grid network. It is a device which measures a quantity called a phasor. A phasor reveals the magnitude and phase angle for the AC voltage or current at a specific location on a power line. By using this information frequency can be determined and is useful for identifying and analyzing system conditions.

fig.2 gives clear information about PMU working.

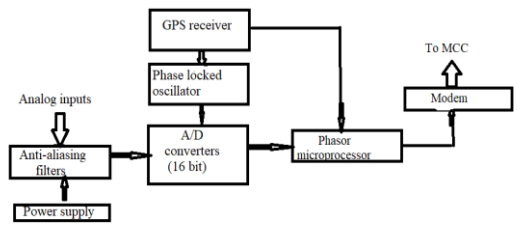

Fig 2. Block diagram of PMU

IV. RBFNN TECHNIQUE

RBFNN technique is known as Radial Basis Function Neural Network, where it is more advanced than wavelet analysis.Accuracy in fault detection by training the data in less time can be seen. 5 Bus electrical power system and IEEE 9 Bus are trained and tested using this technique.

In mathematical modeling, a RBFNN is an artificial neural network that employs radial basis functions as activation functions. The linear combination of radial basis functions of the inputs and neuron parameters is the solution of the network.

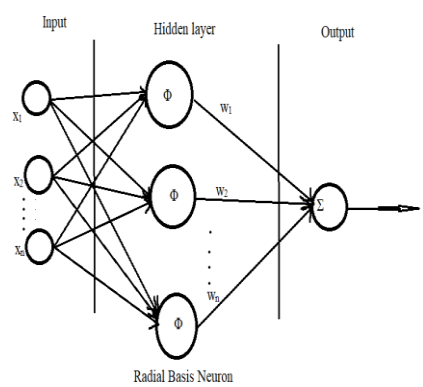

Fig.3 Architecture of Radial Basis Function Network

V. Test cases of 5 Bus electrical power system and IEEE 9 Bus

Standard data for 5 bus electrical power system and IEEE 9 bus data can be seen here[10]-[11].

A. 5 BUS POWER SYSTEM DATA

A test model of a 5 Bus power system using power simulator data has been used for fault detection using RBFNN technique.

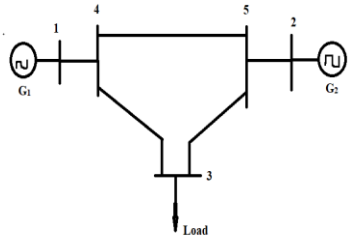

Fig.4:Test model of 5 Bus electrical power system

Standard data:

Table I

Synchronous generator input data of 5- bus electrical power system model:

Bus	Type	X1 (p.u)	X2 (p.u)	Xo (p.u)	Xn (p.u)
1	slack	0.2	0.15	0.05	0.03
2	Generator	0.2	0.15	0.05	0.03

Table II

Line input data of 5-bus electrical power system model:

Bus to Bus	X1(p.u)	X0(p.u)	Max MVa(p.u)
3-4	0.1	0.3	3
3-5	0.1	0.3	3
4-5	0.1	0.3	3

Table III

Transformer input data of 5-bus electrical power system model:

Low voltage (connection) bus	High voltage(connection) bus	phase shift degrees	$X_1=X_2=X_0$	Nominal kV
1(delta)	4(star ground)	0	0.05	25/230
2(delta)	5(star ground)	0	0.05	13.8/230

Sbase=100 MVA,Vbase=230kV

B. IEEE 9-BUS DATA

Using IEEE 9 bus data ,at different fault impedances fault is detected.
In fig.5 the structure of IEEE 9 Bus is displayed here.

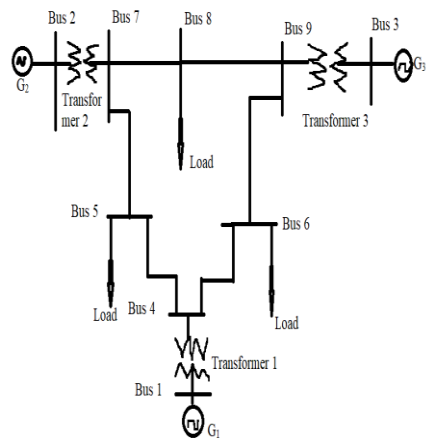

Fig.5 Schematic Diagram of IEEE 9 Bus

Table IV

Line data of 9 bus system:

Line	Resistance(pu)	Reactance(pu)	Susceptance(pu)
1-4	0.000	0.0576	0.000
4-5	0.0170	0.0920	0.1580
5-6	0.0390	0.1700	0.3580
3-6	0.000	0.0586	0.0000
6-7	0.0119	0.1008	0.2090
7-8	0.0085	0.0720	0.1490
8-2	0.000	0.0625	0.0000
8-9	0.0320	0.1610	0.3060
9-4	0.0100	0.0850	0.1760

Table V

Transformer input data of 9-bus power system model:

Low voltage connection(bus)	High voltage connection(bus)	kV
1(star grounded)	4(star grounded)	16.5 /230
2(star grounded)	7(star grounded)	18/230
3(star grounded)	9(star grounded)	13.8 /230

Sbase=100 MVA,Vbase=230kV

VI. RESULTS

Comparison in performance of fault analysis using wavelets and RBFNN for different fault impedance in 5-bus power system and IEEE 9-bus is shown below.

5 BUS at Z_f=0i or bolted form

Bus No.	Wavelets(sec)	RBFNN(sec)
1	2.218206	$1.15178e^{-30}$
2	31.404730	
3	3.504672	
4	5.891496	
5	5.013147	

5 BUS at Z_f=0.01i

Bus No.	Wavelets(sec)	RBFNN(sec)
1	12.783965	$1.15178e^{-30}$
2	5.317100	
3	5.857954	
4	6.435582	
5	4.861446	

5 BUS at Z_f=0.1i

Bus No.	Wavelets(sec)	RBFNN(sec)
1	70.358988	$1.15178e^{-30}$
2	5.517468	
3	5.693808	
4	6.466315	
5	4.987692	

IEEE 9 BUS at Z_f=0i or bolted form

Bus No.	Wavelets(sec)	RBFNN(sec)
1	4.457750	$3.90474e^{-31}$
2	4.101706	
3	3.801625	
4	2.725310	
5	2.845978	
6	3.281014	
7	3.581300	
8	3.509251	
9	3.870655	

IEEE 9 BUS at Z_f=0.01i

Bus No.	Wavelets(sec)	RBFNN(sec)
1	75.744153	$3.90474e^{-31}$
2	6.406745	
3	4.871004	
4	4.833437	
5	6.131964	
6	5.171172	
7	12.517193	
8	6.612097	
9	5.453874	

IEEE 9 BUS at Z_f=0.1i

Bus No.	Wavelets(sec)	RBFNN(sec)
1	65.918379	$3.90474e^{-31}$
2	4.679890	
3	5.734658	
4	5.398062	
5	4.533428	
6	5.993073	
7	5.748574	
8	5.716618	
9	7.481203	

Neural Network Training Performance:

Radial Based Function Neural Networks get trained at different faults at 150 Epochs where its performance can be seen in below graphs for 5 bus and IEEE 9 bus.

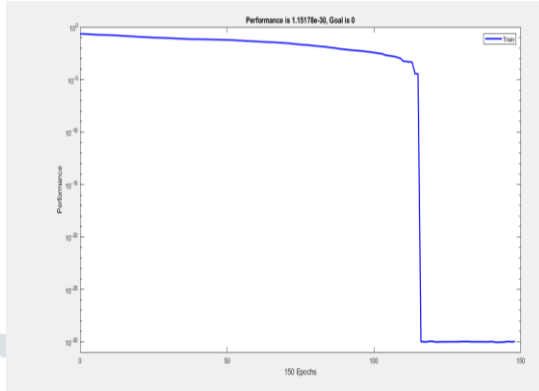

Fig.6:Trained data for 5 bus

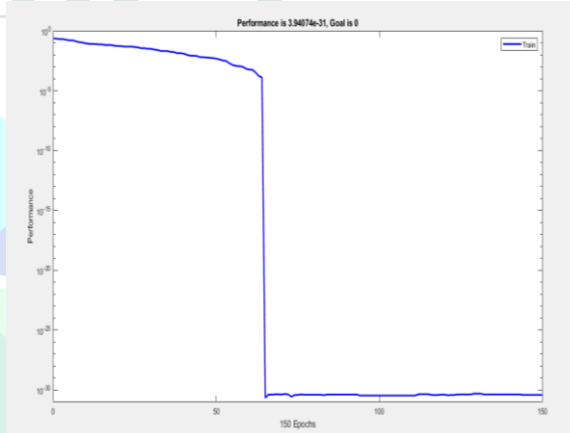

Fig.7:Trained data for IEEE 9 bus

Fault Inception Angle:

At different faults,its angles are recorded which are known as fault inception angles. PMU calculates the fault angles at various faults.

Fault angle at 5-Bus system

At 5 nodes	**Z_f=0,0.01i,0.1i**
Fault type	inception angle
AG	-90
BG	-210
CG	150
ABCG	-90
AB	180
BC	-60
AC	60
ABG	-90
BCG	30
ACG	150

Fault angle at IEEE 9 Bus

Z_f=0i or bolted form									
fault type	node 1	node 2	node 3	node 4	node 5	node 6	node 7	node 8	node9
AG	89.5805	89.6387	89.5546	89.5975	89.6219	89.5731	89.6377	89.6546	89.5843
BG	-30.4195	-30.3613	-30.4454	-30.4025	-30.3781	-30.4269	-30.3623	30.3454	-30.4157
CG	29.5805	29.6387	29.5546	29.5975	29.6219	29.5731	29.6377	29.6546	29.5843
ABCG	89.5805	89.6387	89.5546	89.5975	89.6219	89.5731	89.6377	89.6546	89.5843
AB	-0.4195	-0.3613	-0.4454	-0.4025	-0.3781	-0.4269	-0.3623	-0.3454	-0.4157
BC	120	120	120	120	120	120	120	120	120
AC	-120	-120	-120	-120	-120	-120	-120	-120	-120
ABG	89.5805	89.6387	89.5546	89.5975	89.6219	89.5731	89.6377	89.6546	89.5843
BCG	-150	-150	-150	-150	-150	-150	-150	-150	-150
ACG	-30	-30	-30	-30	-30	-30	-30	-30	-30

Fault angle at IEEE 9 Bus

Z_f=0.01i									
fault type	node 1	node 2	node 3	node 4	node 5	node 6	node 7	node 8	node9
AG	89.5774	89.6360	89.5513	89.5947	89.6192	89.5700	89.6351	89.6522	89.5814
BG	-30.4226	-30.3640	-30.4487	-30.4053	-30.3808	-30.4300	-30.3649	30.3478	-30.4186
CG	29.5774	29.6360	29.5513	29.5947	29.6192	29.5700	29.6351	29.6522	29.5814
ABCG	89.5774	89.6360	89.5513	89.5947	89.6192	89.5700	89.6351	89.6522	89.5814
AB	-0.42105	-0.3626	-0.4470	-0.4039	-0.3795	-0.4284	-0.3636	-0.3466	-0.4172
BC	120	120	120	120	120	120	120	120	120
AC	-120	-120	-120	-120	-120	-120	-120	-120	-120
ABG	89.5789	89.6374	89.5530	89.5961	89.6205	89.5715	89.6364	89.6534	89.5828
BCG	-150	-150	-150	-150	-150	-150	-150	-150	-150
ACG	-30	-30	-30	-30	-30	-30	-30	-30	-30

Fault angle at IEEE 9 Bus

Z_f=0.1i									
fault type	node 1	node 2	node 3	node 4	node 5	node 6	node 7	node 8	node9
AG	89.5472	89.6100	89.5192	89.5670	89.5933	89.54061	89.6102	89.6285	89.5527
BG	-30.4528	-30.3900	-30.4808	-30.4330	-30.4067	-30.4594	-30.3898	30.3715	-30.4473
CG	29.5472	29.6100	29.5192	29.5670	29.5933	29.5406	29.6102	29.6285	29.5527
ABCG	89.5472	89.6100	89.5192	89.5670	89.5933	89.5406	89.6102	89.6285	89.5527
AB	-0.4355	-0.3751	-0.4624	-0.4172	-0.3919	-0.4425	-0.3756	-0.3580	-0.4307
BC	120	120	120	120	120	120	120	120	120
AC	-120	-120	-120	-120	-120	-120	-120	-120	-120
ABG	89.5602	89.6212	89.5330	89.5791	89.6046	89.5534	89.6210	89.6388	89.5652
BCG	-150	-150	-150	-150	-150	-150	-150	-150	-150
ACG	-30	-30	-30	-30	-30	-30	-30	-30	-30

VII. CONCLUSION

RBFNN data based fault detection for 5 bus power system and IEEE 9 bus is investigated in this study, revealing the fault inception angle using PMU. This method trains and tests the data within less epochs.Analysed and computed fault data for different faults at different fault impedances are studied. Comparative data of wavelets and RBFNN method is shown where wavelets are lagging in giving fine results for fault detection while Artificial Networks get trained for 5 bus at $1.15178e^{-31}$ seconds and IEEE 9 bus at $3.90474e^{-31}$ seconds for 150 Epochs.

REFERENCES:

1. H. Yin and L. Fan, "PMU data-based fault location techniques," North American Power Symposium 2010, pp. 1-7, 2010.
2. Abdul Gafoor Shaik, Ramana Rao V. Pulipaka. A new wavelet based fault detection, classification and location in transmission lines, International Journal of Electrical Power & Energy Systems, vol. 64, pp. 35-40, 2015.
3. D. -I. Kim, T. Y. Chun, S. -H. Yoon, G. Lee and Y. -J. Shin, "Wavelet-Based Event Detection Method Using PMU Data," in IEEE Transactions on Smart Grid, vol. 8, no. 3, pp. 1154-1162, May 2017.
4. AzriyenniAzhariZakri et al. “The ANN Design Based On PMU Readings For Fault Location Detection.” IJSTR pp.1-6, (2021).
5. H. Jiang, J. J. Zhang and D. W. Gao, "Fault localization in Smart Grid using wavelet analysis and unsupervised learning," 2012 Conference Record of the Forty Sixth Asilomar Conference on Signals, Systems and Computers (ASILOMAR), pp. 386-390, 2012.
6. Purva Sharma, Deepak Saini, Akash Saxena Fault Detection and Classification in Transmission Line Using Wavelet Transform and ANN. Vol. 5, No. 3, pp. 284-295, September 2016.
7. Application of RBF neural network to fault classification and location in transmission lines, Volume 151, Issue 2, pp. 201 – 212, March 2004.
8. Farzad Dehghani, Masoud Dehghani, Mohammad Hakimi and Shamsedini Kamalvand, PMU-Based Fault Classification Using Artificial Neural Network For Power Systems Considering Data Mismatches, pp. 37-45, 2014.
9. Mamta Patel, R. N. Patel, Fault Detection and Classification on a Transmission Line using Wavelet MultiResolution Analysis and Neural Network, volume 47– No.22, pp.27-33, June 2012.
10. Aung Latt, Unsymmetrical Fault Analysis of 5-Bus Power System Using Power World Simulator, February 2019.
11. Transient Stability Improvement of IEEE 9 Bus System Using Power World Simulator, MATEC Web of Conferences ,2016.