# Design and Analysis of Multilink Patient Assisted Robot

Abhirami Dev, Aditya Patil, Aniruddha Neve, MayurBadgujar, Prof.Sameer Agrawal

*Department of Mechanical Engineering, Smt.KashibaiNavale College of Engineering, Pune.*

**Abstract –Multilink Patient Assisted Robot (PAR) having four Degrees-of-freedom has various challenging problems including control of inherent vibrations, presence of bending and twisting. This paper represents calculations, design, analysis and validation of this pick and place robotic system. The design of this model has been carried out using CAD packages. In order to achieve this, static structural analysis of base of Patient Assisted Robot (PAR) as well as modal analysis of the links of PAR has been carried out using Finite Element Method.**

**Keywords: Multilink Patient Assisted Robot, Base, Vibration, Analysis, Medical application.**

## I. INTRODUCTION

Robot is a computer controlled programmable machine and capable of carrying a seriesof actions which are complicated. This robot can be guided by an external control device or control may be within robots. This robot can be autonomous or semiautonomous like patient assistant robot, microscopic Nano robots etc.

Patient assistant robot is a robot developed mainly for bedridden patients having serious injuries or physically challenged, such people would need tablets or glass of water etc. which will not be possible for them to take on their own. For such people patient assistant robot is developed. Patient assistant robot mainly consists of 3 serial links, micro drives, flexible shaft etc. Flexible shaft is mainly used for joint actuation. At the end of third link micro gripper is used for lifting of the object having maximum pay load of 800gm. It mainly consists of 4 system hardware like Links, revolute joints, Flexible shaft, Base etc.

Patient assistant robot mainly consists of 3 links of length 800mm, 400mm, 200mm respectively. The material used for the links is carbon fiber reinforced plastic which are having properties like higher strength to weight ratio, light in weight, fatigue resistance, good tensile strength corrosion resistance. This links is able to move independent of each other to achieve the required position.

Revolute joints are used to rotate the link. It mainly consists of two parts joint housing and adapter plate. Adapter plate has a pin which extends through the joint housing and then is coupled to a flexible shaft. Joint housing and adapter plates are fixed to the links which provides rotational motion to the links.

Flexible shafts are mainly used to transfer the motion between the two objects which are not on same axis. In patient assistant robot, it is used to transfer the motion from the motors to the joints. It also dampens the vibrations thus preventing the transmission of any sort of vibration from motors to links. The end of flexible shaft has the end couplings which enables us to couple them to suitable power transmitting shaft.

Base is a component that encloses all the electrical circuits, motor drives, motion controller and power supply etc. The motors will be mounted on the top of the base. The base also has a hole in the middle which allows the ball screw to pass in it. Ball nut will be fixed to the base itself. The whole base is mounted on the tripod stand.The motor that will drive the recirculating ball screw will be mounted on the tripod itself. Provisions for the same needs to be made. The calculations for the recirculating ball screw has been done as per provided by SKF.

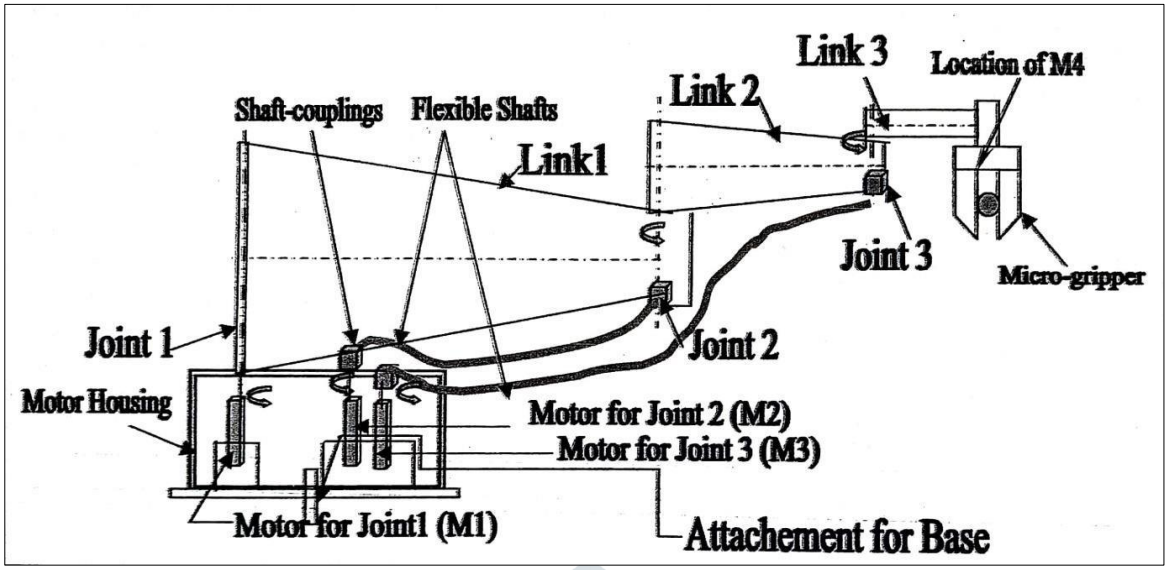


Fig. 1 Schematic of multilink (PAR)

## II. MECHANICAL DESIGN OF MULTILINK PATIENT ASSISTED ROBOT

### *A. SYSTEM DISCRIPTION*

The proposed system will be consisting of 3 serial links and micro drives and flexible shaft will be used for joint actuation. The micro gripper will be the end effecter for lifting the object (Payload max. 800gm) The system will have sensor instrumented micro-gripper and links. The base of the system would be having tripod mechanism.

### *B. SYSTEM HARDWARE*

*1.LINKS:*

The PAR consists of three links of lengths 800mm, 400 mm and 200 mm respectively. The material for the links is Carbon Fiber Reinforced Plastic (CFRP). CFRP being light in weight and its high mechanical strength makes it a very good material for the links. The links are hollow and tapered which reduces the weight and also increases it's bending resistance. CFRP has very less density as compared to the metals, hence tare weight of the links is reduced and thus reduces the torque requirements for the motors.

*2.REVOLUTE JOINT:*

Links rotate through a revolute joint. Revolute joint is a singledegree of freedomkinematic pair used in mechanisms. Revolute joint consists of two parts joint housing and adapter plate respectively. Adapter plate has a pin which extends through the joint housing and then is coupled to a flexible shaft. The adapter plate sits on the joint housing. Joint housing and adapter plate are then fixed to the link which in turn provides the rotational motion to the link. The joint housing encloses two bearings which supports the pin from the adapter plate and makes free rotation of the pin possible.

*3.FLEXIBLE SHAFT:*

The rotational motion required to rotate the links is transferred to the links from the motors through a flexible shaft. Flexible shaft is a mechanical shaft which transmits motion to two different objects which are not on the same axis. Flexible shaft may or may not have a covering. Cover may or may not rotate with the shaft. Flexible shaft is similar to a solid drive but it can be routed under, over and around obstacles. The flexible shaft is extremely rugged and permits continuous operation at high speed ranges. It also dampens the vibrations thus preventing the transmission of any sort of vibration from the motor to the links. The ends of a flexible shaft have end couplings which enables us to couple them to suitable power transmitting shaft. One end of the flexible shaft will be connected to motor shaft and the other will be connected to the pin of the revolute joint. Thus, pin will then transmit this motion to the link.

*4.BASE*

Base is the component that encloses all the electrical circuits, motor drivers, NI myRIO, motion controller and powersupply etc. The motors will be mounted on the top of the base. The base also has a hole in the middle which allows the ball screw to pass in it. Ball nut will be fixed to the base itself. The whole base will be mounted on a tripod stand. The tripod stand is foldable and also the height of the tripod can be adjusted. The motor that will drive the recirculating ball screw will be mounted on the tripod itself. Provisions for the same needs to be made. The calculations for the recirculating ball screw has been done as per provided by SKF

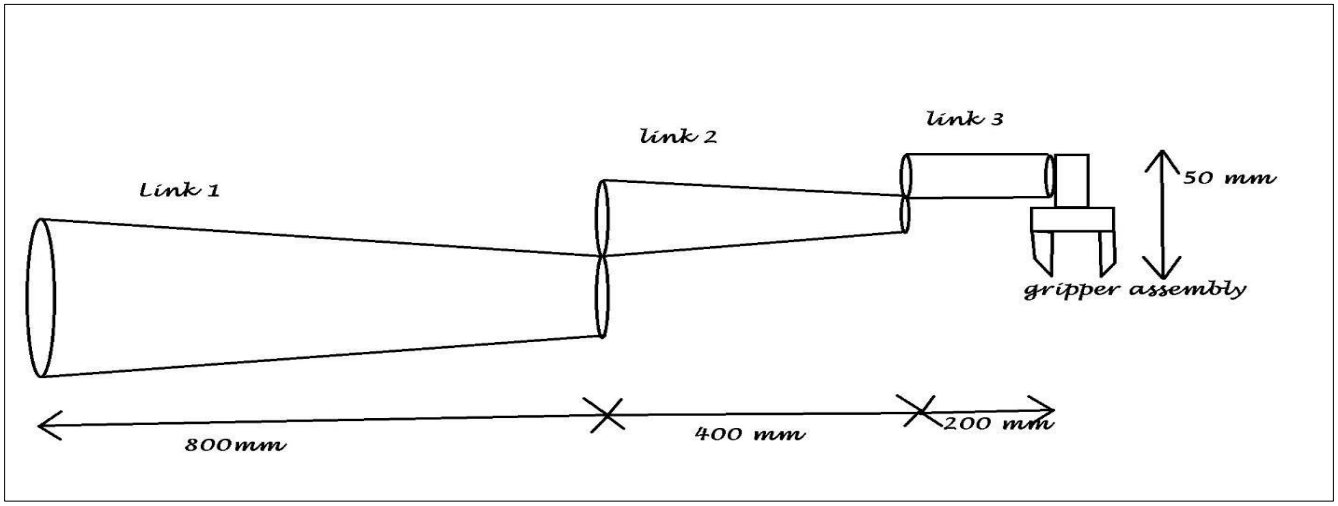


Fig. 2 Link assembly

## III. DESIGN AND CALCULATIONS

### *A. LINK*

1. Link 1 weight (w1) = 0.04378 kg
2. Link 2 weight (w2) = 0.02013kg
3 Link 3 weight (w3) = 0.01007 kg
4. Motor weight (w4) = 0.025 kg
5. Revolute joint assembly (w5) = 0.06 kg
6. Flexible shaft assembly weight1 (w6) = 0.15 kg
7. Flexible shaft assembly weight2 (w7) = 0.2 kg
8. Weight of gripper (w8) = 0.118 kg
9. Pay Load (L) = 0.8 kg
10. Length of link 1 (l1) = 0.8 m
11. Length of link 2 (l2) = 0.4 m
12. Length of link 3 (l3) = 0.2 m

Design for the joints only on the link 1 will be done as they bear the largest loads. Other joints will be similar to these joints.

Total load on the link at point A:

1. $\sum F_{ya}$ = (w1 + w2 + w3 + w4 + L + 2× w5 + w6 + w7 + w8) × g
= (0.04378 + 0.02013 + 0.01007 + 0.025 + 0.8 + 2× 0.06 + 0.15 + 0.2 + 0.118) × 9.81
= 14.6 N
2. $\sum F_{yb}$ = (w2 + w3 + w4 + w5 + L + w8) × g
= (0.02013 + 0.01007 + 0.025 + 0.06 + 0.8 + 0.118) × 9.81 = 10.1 N

Taking moment at point A: -
$\sum M_A$ = [w1× (0.8/2) + w2× (0.8+0.4/2) + (w3 + L + w4) × (0.8+0.4+0.2/2) + w5× 0.8 + w5× 1.2 + w6× 0.4 + w7× 0.6 + w8× 1.4] × 9.81
= [0.04378 × 0.4 + 0.02013× (0.8 + 0.2) + (0.01007 + 0.8 + 0.025) (0.8 + 0.4 + 0.1) + 0.06× 0.8 +0.06× 1.2 + 0.15× 0.4 + 0.2× 0.6 + 0.118× 1.4] × 9.81
$\sum M_A$ = 15.6 Nm

Angular Torque Calculation considering uniform diameter Tube

Calculating Moment of inertia: - For a hollow thin walled tube
**Ix = Mk²**
Ix = 1.38 × $[(0.004+0.005)/2]^2$
= 2.7× $10^{-5}$ Kg-m²
Where Ix= Mass moment of inertia about center axis of shaft
Angular Torque: -
NOTE: Considering the maximum angular acceleration from Faulhaber Catalogue
α = 120× $10^3$rad/sec²

Angular Torque
**T = Iα**
T = 2.7× $10^{-5}$ × 120× $10^3$
Ta = 3 Nm ---------- (3)
Therefore, Total torque requirement for the links is
Total = Ta + Ts
= 2.9055 + 15.93 -----(From 1 and 3)
Total = 18.8355 Nm

Calculations for Link Stresses: -

Consider link 2 & 3 are at an angle of 90o to link 1. Thus, a Maximum torsion torque will act on link 1.

Therefore, Calculating the torsional torque on link1.

∑TA = [w2× (0.4/2) + (w3+L+w4) × (0.4+0.2/2) + w5× 0.4 + w8× 0.8] × 9.81

∑TA = [(0.02013× 0.2) + (0.8350× 0.5) + (0.06× 0.4) +0.118× 0.8] × 9.81

∑TA = 6 N-m

Torsional stress (τ) in link 1 From relation,

$$\frac{T}{J} = \frac{\tau}{R} = \frac{G\theta}{L}$$

Hence,

$\tau = 6000\times 4.5 / [(\pi/32) \times (10^4-8^4)]$

Torsional stress = 46.58 N/mm2

Hence,

$Ø = 6000\times 800 / \{31800\times [(\pi/32) \times (10^4-8^4)]\}$

$= 0.26$ rad or 15°

Twist Angle = 15°

*B. BALL SCREW*

Ball screw lead

The specifications of ball screws are standardized in ISO, JIS, etc.

Total mass needs to be carried m=10 kg

Maximum speed $V_{max}$=0.041 m/s

Backlash = 0.1mm

Driving motor DC servomotor

Frictional coefficient of guide surface μ=0.02

Shaft length=300 mm

End length=100 mm

Overall length= 300+100+20 = 420mm

With reference of SKF ball screw catalogue

They have various ranges

1.SD/BD miniature screws (range start from 6 mm)

2.SDS/BDS/SHS miniature screws in stainless steel (rangestart from 8 mm)

3.SX/BX universal screws (range start from 20mm)

4.SL/BL long lead screws (range start from 20mm)

Our design has constraint of only one side fixed support. Our load is around 10kg approximately.

So, we can't go for big nominal diameter like 20 mm. Hence, we have choice of miniature screws for selection. Miniature screws are available in two leads 2mm and 5mm. We require lot of precision in moving a load up and down. Hence 2 mm lead will preferable for our application.

Nominal diameter=10 mm

Mass of shaft 0.51 kg/m

Helix angle (α)

$$\tan \alpha = \frac{lead}{\pi\times d}$$

$\tan \alpha = 2/ (\pi\times 10)$

$\alpha = 3.64°$

Friction angle (φ)

Coefficient of friction=0.02

$\Phi=\tan \mu$

$\Phi=1.14°$

Lifting torque

$$M_t = \frac{w\times d\times \tan(\alpha+\phi)}{2}$$

$= 10\times 9.81\times 10\times \tan (3.64+1.1457)$

$M_t = 40.2$ N-mm

Accelerating torque

Consider max RPM 200

So, nut can travel 400mm within minute

$$\omega = \frac{2\times\pi\times N}{60}$$

$\omega = 20.94$ rad/s

Acceleration time (t)=0.16

$$\alpha = \frac{\omega}{t}$$

$\alpha = 139.6$ rad/s$^2$

Accelerating torque

$Ma = I\times \alpha$

$= 1.56\times 139.6$

$= 217.776$ kg mm$^2$ /s$^2$

$=0.217$ N-mm

Overall torque = 40.2+0.217

= 40.417 N-mm

Overall torque = 44.9 N-mm

Material for both shaft and nut: $X_{30}Cr_{13}$ (AISI 420 equivalent

Balls are in $X_{10}5CrMo_{17}$ (AISI 440C equivalent)

Minimum tensile strength=275 MPa

Consider factor of safety=1.5

Consider efficiency 90%

$\sigma_{permissible} = 275/1.5$

= 183 MPa

$$\sigma_{axial} = \frac{4Fa}{\pi d^2}$$

$= 10\times 9.81\times 4/(\pi\times 10^2)$

$= 1.249\ N/mm^2$

$$\zeta_{torsional}=\frac{16T}{\pi d^3}$$

$= 0.228\ N/mm^2$

$$\text{equivalent stress} = \sqrt{\sigma^2 axial + 3\zeta^2 torsional}$$

$=1.31\ N/mm^2$

Permissible stress is $183\ N/mm^2$

So, lead screw design is safe

Buckling Load

$$P = \frac{\lambda\times\pi^2\times E\times I}{lb^2}$$

$\lambda = 0.25$(one end fixed and other keep open)

$E = 200$ GPa

$I = \pi\times 0.01^4/64$

$L_b = 0.3$ m

$P = 0.25\times \pi^2\times 200\times 10^9\times \pi\times 0.01^4/ (0.32\times 64)$

$P = 2691$ N

This is permissible buckling load

We have only 50N load

Hence our selected ball screw is safe.

On the basis of calculations, we have selected miniature screws in stainless steel from SKF catalogue and selected miniature screws part number is SDS/BDS 10× 2 R.

## IV. FINITE ELEMENT STATIC ANALYSIS OF BASE

Two types of force occur on the part: first is the direct compressive force mainly due to itsweight. The weight of the whole assemble is about 90N and after consideration of Factor of safety as 2 the weight is 180N for analysis purpose.

The second force is the bending force. This is due to the masses at the end of each link. At the end of link 1, an equivalent weight of 2.18 N is taken, this includes the mass of the link, revolute joint and flexible shaft. At the end of link 2, an equivalent weight of 1.67N with similar consideration as above mentioned. And at the end of link 3, an equivalent weight of 10N is taken, this includes the weight of gripper's motor and payload of max. 8N.

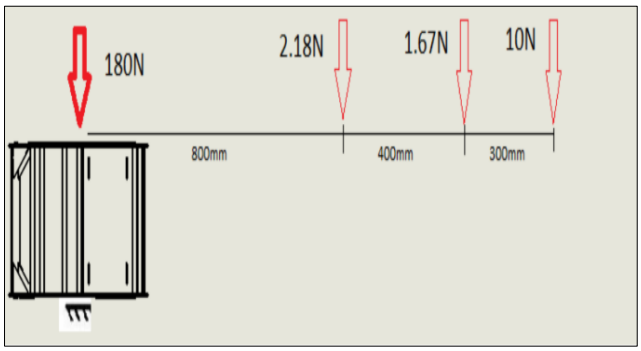


Fig. 3 Free Body Diagram for Body Structure

### *A. RESULTS*

1. Equivalent Stress Analysis: Max Stress of 276.54 Mpa is developed near the holes as shown in figure.

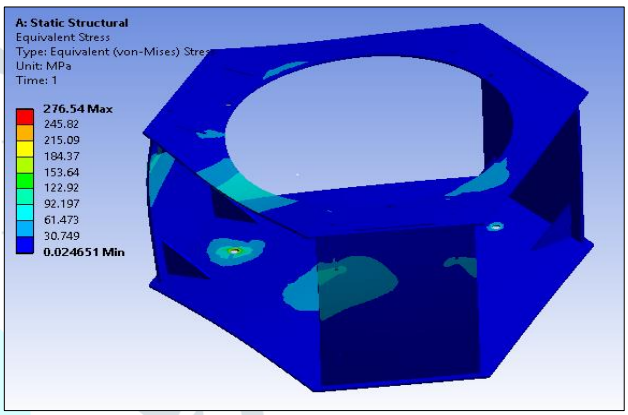


Fig. 4 Equivalent Stress Analysis of Body Structure

2. Total Deformation Analysis: Max Deformation is of 1.5576 mm on the topmost portion at the side of bending load as shownin figure with red color.

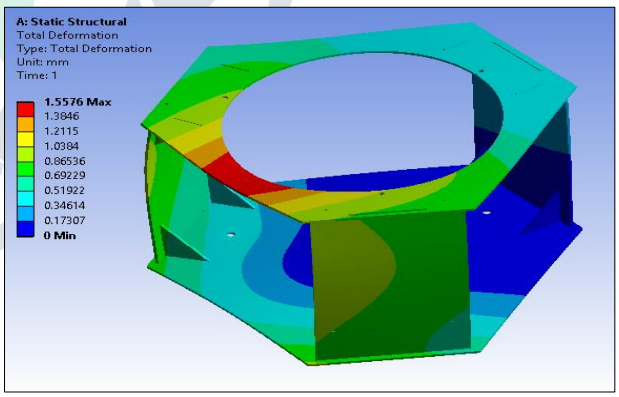


Fig. 5 Total Deformation Analysis of Deformation

## V. FINITE ELEMENT MODEL AND MODAL ANALYSIS OF BASE ALONG WITH LINKS

As evident from the overall design as well as CAD model, the multi-link PAR has a horizontal reach of 1500 mm, distributed over three jointed links. Hence, by virtue of the self-weight itself the PAR will have mild shaking and natural means of producing vibration in real-time. This self-vibrating structure will be boosted up for enhanced vibration as and when PAR will grip a payload by its mini-gripper. We have modeled the system for a maximum

payload of 800 gm at a terminal reach of 1500mm and analyzed the same through finite element method. The total weight of the PAR assembly is 18 kg (approx.), considering a factor of safety of 2.0 for strength-bearing members. Figure 6 shows the finite element model and overall deformation pattern (total) of the designed PAR.

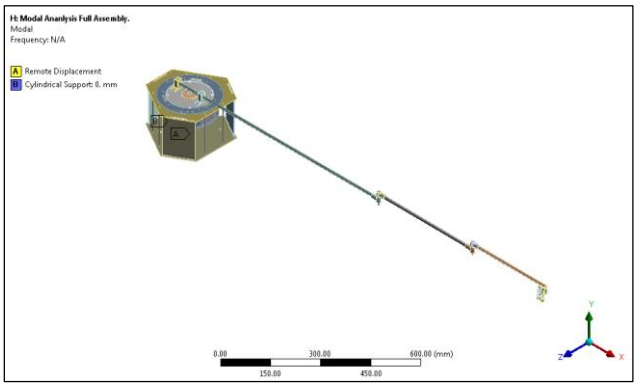


Fig. 6 Boundary Conditions for Base along with links

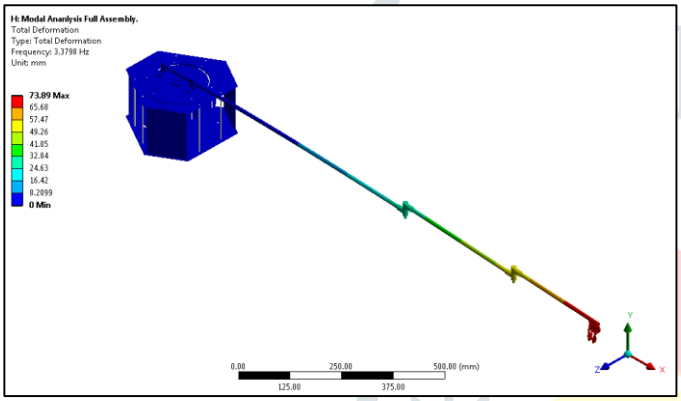


Fig. 7 Deformation Pattern of the PAR at 1st mode of vibration

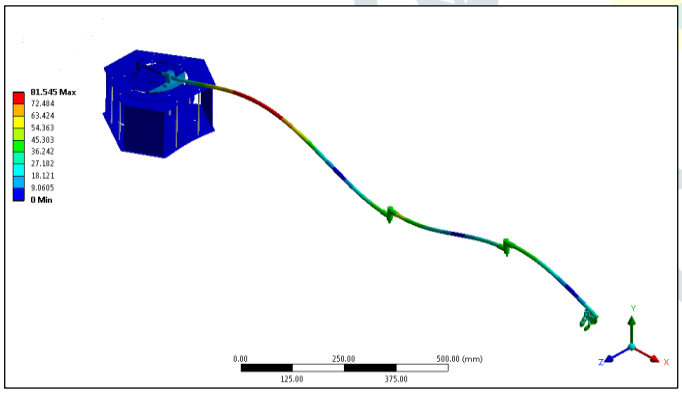


Fig. 8 Deformation Pattern of the PAR at 10th mode of vibration

| | Mode | Frequency [Hz] |
|---|---|---|
| 1 | 1. | 3.3798 |
| 2 | 2. | 3.7728 |
| 3 | 3. | 20.063 |
| 4 | 4. | 20.806 |
| 5 | 5. | 36.24 |
| 6 | 6. | 39.848 |
| 7 | 7. | 59.795 |
| 8 | 8. | 60.016 |
| 9 | 9. | 102.14 |
| 10 | 10. | 105.95 |

Fig. 9 Frequency at all modes.

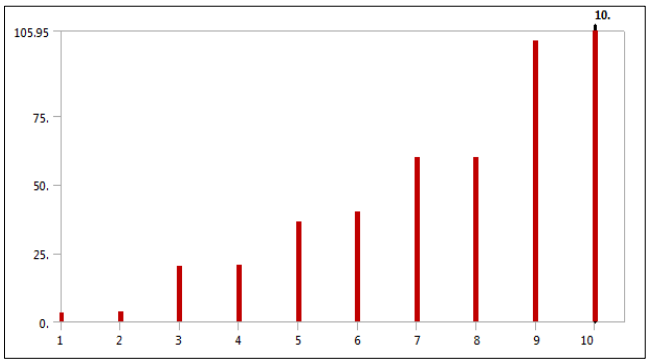


Fig. 10 Plot of modal frequencies under vibration at PAR

## VI. FINITE ELEMENT STATIC ANALYSIS OF MEDIATOR

As above mentioned under model description/turntable, this block contains two thrust and two ball bearings with two plates on both ends. The lower base is connected to the plate using 4 M4 bolts and the upper plate rests on the thrust bearing on the top.

M10 bolt is used to tighten the lower and upper plate, assuming this action leading to an equivalent compressive force of 50N on the surface where thrust bearing rests.

Another force causes bending this is an equivalent force of link, flexible shaft weights, gripper and revolute joint. Assuming all of these concentrates at a distance of 800mm from the center axis of the turntable, a free body diagram results as follows:

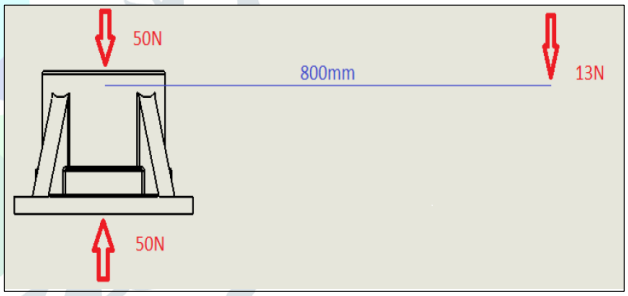


Fig. 11 Free Body Diagram for Mediator

With the application of 50N load which is the actual load acting on Mediator we have obtained a 11 as the safety factor. Hence the design of Mediator is acceptable.

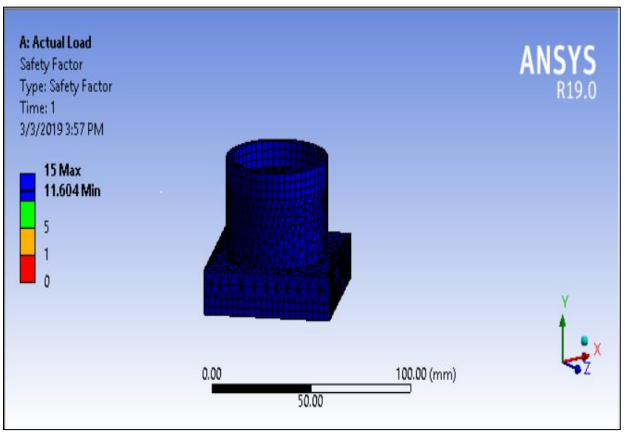


Fig. 12 Actual load on Mediator

Total Deformation Analysis: Max deformation is of 0.046188mm on the topmost portion as shown in with red color.

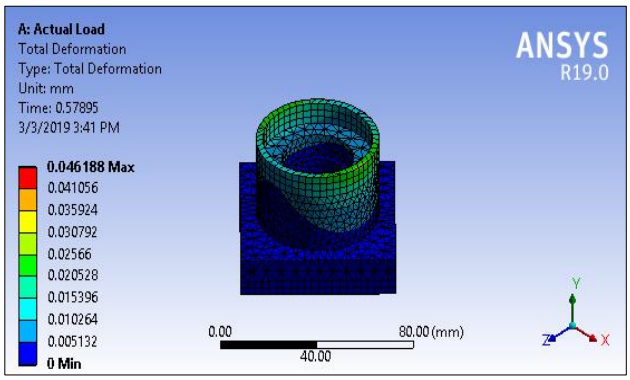


Fig. 13 Total Deformation of Mediator

Equivalent stress: The maximum equivalent stress (von Mises) is 2.4992 Mpa

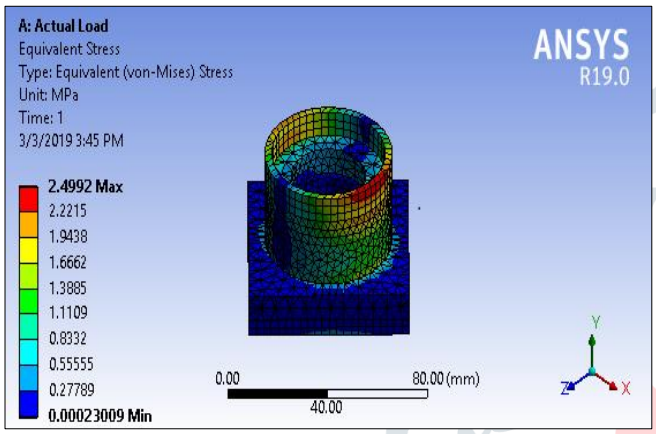


Fig. 14 Equivalent Stress on Mediator

In this case a compressive load of 100N is considered which is double of the actual load acting on it. But the results show that a safety factor of 5 is obtained in this worst condition also, hence the design of mediator is acceptable.

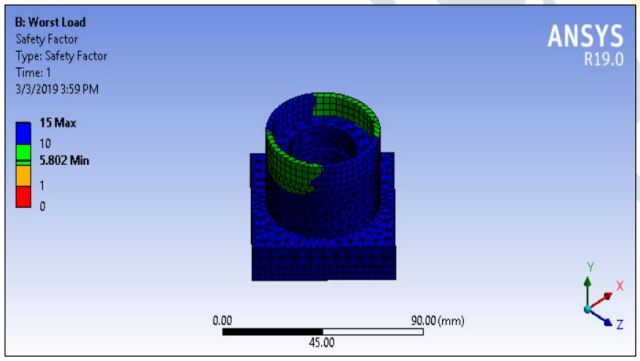


Fig. 15 Worst load on Mediator

Total Deformation: The max total deformation obtained is 0.092376mm.

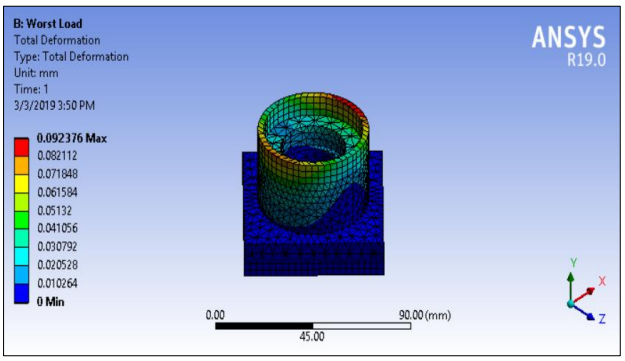


Fig. 16 Total Deformation of Mediator

Equivalent Stress: The maximum equivalent stress (Von-Mises) is 4.9983 Mpa.

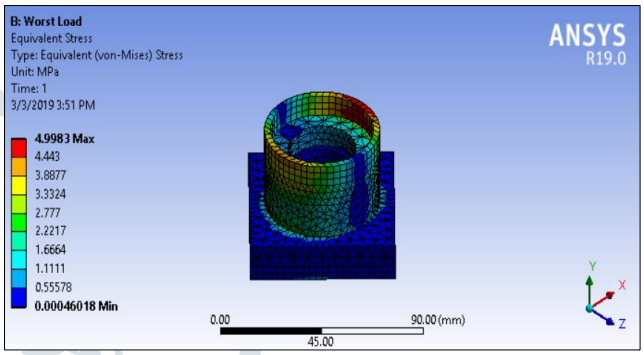


Fig. 17 Equivalent Stress on Mediator

## VII. CONCLUSION

The design and analysis of three link flexible robotic system is reported in this paper. We have seen the static structural analysis of base model, according to the results from the analysis; it can be observed that at some points the stress limit had been exceeded beyond the yield limit of respective material used for base construction. By considering the yield limit as controlling parameter, topology optimization can be used to optimise the current design by adding extra materials at critical points.

Base of the robot encloses rotational elements like motors, lead screw, gears, etc. So it becomes important to carry out the modal analysis of base so that operating frequency does not match with the natural frequency to avoid resonance. In the modal analysis we found out results for 10 modes of vibration and according to that we had decided the operating frequency.

Due to inconsiderable amount of deflection produced in the last link, the design is modified and mediator is used. With the use of mediator there is significant reduction in deflection is observed. The analysis of mediator as a critical component gives results of its deflection and stresses induced in the permissible limit. Furthermore, optimization of mediator is done for survival under the worst conditions of load. In the worst conditions also, mediator regains its factor of safety under permissible limits as per the properties of material used for its construction.

ACKNOWLEDGEMENT

We are very grateful to our project guide Prof. Sameer Agrawal and our sponsors 'SVR InfoTech' team for their valuable support and guidance.

REFERENCES

1. M.Benosman& G. Vey, "Control of Flexible Manipulators: A Survey", Robotica, vol. 22, 2004, pp 533-545.
2. A R. Fraser & R.W. Daniel, "Perturbation Techniques for Flexible Manipulators", Norwell, MA, Kluwer, 1991.
3. Z.H. Luo, "Direct Strain Feedback Control of a Flexible Robot Arm: New Theoretical & Experimental Results", IEEE Transactions on Automatic Control, vol. 38, no. 11, Nov. 1993, pp 1610-1622.
4. Wen Chen, "Dynamic Modelling of Multi-link Flexible Robotic Manipulators", Computers & Structures, vol. 79, no. 2, 2001, pp 183-195.
5. V. Feliu, J.A. Somolinos& A. Garcia, "Inverse Dynamics based Control System for a Three Degrees-of-freedom Flexible Arms", IEEE Transactions on Robotics & Automation, vol. 19, no. 6, Dec. 2003, pp 1007-1014.
6. Debanik Roy & Manoj Patel, "On the Design and Vibration Analysis of a Flexible Robot Interfaced with a Mini-gripper",