Design & Analysis of Robert Type Multi-effect Evaporator for Sugar Industry

Abhishek Deshmukh[#1], AnuragIngale[*2], Amit Datir[#3], Pritesh More[*4]

Department of Mechanical Engineering

Sinhgad Institute of Technology, SavitribaiPhule Pune University, India

[1]Student, Mechanical, SKNCOE, Pune, deshmukhabhi2410@gmail.com

[2]Student, Mechanical, SKNCOE, Pune, ingaleanurag7@gmail.com

[3]Student, Mechanical, SKNCOE, Pune, amitdatir3@gmail.com

[4]Student, Mechanical, SKNCOE, Pune, priteshmore13497@gmail.com

Guided by Prof. P.H.Biradar,SKNCOE, Pune

Abstract-**Evaporator is one of the most energy intensive sections of a number of process industries such as pulp and paper, sugar, desalination, pharmaceuticals, dairy and food processing, etc. Single effect evaporator can be wasteful of energy if the vapour's heat is not used. This is resolved by using multiple-effect evaporators. In the cane sugar industry, Robert type evaporators are generally considered the preferred evaporator design because Vapour bleeding is incorporated. The objective of this project is to design a model for a three-effect evaporator system. Vapour bleeding is incorporated in the model as a means to reduce the amount of steam consumed in the evaporator. Multiple effect arrangements are designed to utilize waste heat and reduce steam consumption and heating power. This is done by using the vapour generated in the first stage as the heat source in the second stage heat source in third stage. Other energy reduction schemes like condensate, feed and product flashing, vapour compression etc. are also available. Vapour bleeding brings about an increase in the steam economy of the process, but at the added cost of the required heat exchangers. In addition to the design of this evaporator, we will perform analysis to determine various stresses and support structure design for optimization of weight of evaporator.**

***Keywords*- Evaporator, Multi-effect, Robert type, Sugar industry, vapour bleeding**

I. INTRODUCTION

Worldwide, raw sugar is manufactured from sugarcane that is made up of approximately one seventh sucrose, one seventh fibrous material and most of the remainder being water. A series of crushing mills extract the juice from the cane leaving behind a mixture of fibrous material and water called bagasse. This bagasse is used as fuel in boilers to generate the steam required to drive steam turbines and for process heating in the factory.The extracted juice is heated by a series of juice heaters and then fed into a clarifier where the majority of the insoluble impurities are removed. The resulting clear juice is then pumped to a multi-effect evaporator (MEE) set where more than 90% of the water in juice is evaporated.A MEE set comprises a number of vessels through which juice flows in series while steam is cascaded from the vapour space of one vessel and into the calandria (steam chamber) of the next. The first vessel is heated with low pressure (LP) steam and a condenser is used after the final vessel to generate a vacuum after evaporation operation performed at the pan stage which functions in a similar manner to an individual evaporator vessel. However, as the vessels at the pan stage are not cascaded, they operate less efficiently with respect to steam usage.The pan stage produces massecuite which is a product made up of sugar crystals surrounded by molasses. This is fed to centrifuges where the crystals are separated and, after drying, become the raw sugar product.

A. *Objective of Evaporation*

The clarification process has given a clear juice. This juice consists of sugar dissolved in water, together with certain impurities. Now that we have removed the impurities as far as possible, it remains to remove the water. This is the object of evaporation. However, in proportion as we extract water from the juice, the sugar will become concentrated. It will then approach the point of saturation that is the point at which crystals will begin to appear in the liquid. The concentration is pushed to its maximum, until there is left for the mother liquor only the space remaining free between the crystals. The name given to the mixture so obtained of solid crystals and viscous mother liquor is "massecuite". Such a mass obviously cannot be handled like a juice or liquid syrup. Hence the concentration process is separated into two phases: (a) evaporation so called, which proceeds from clear juice to syrup, and during which we are dealing only with a liquid material. (b) The sugar boiling, this commences just before the stage where crystals appear in the syrup, and which proceeds up to the maximum concentration. The impurities obviously remain in the mother liquor as also do part of the sucrose. It remains then to separate the sugar crystals from the mother liquor and to strive to extract from the latter as much as possible of the sugar which it retains. We shall study these operations under sugar boiling and centrifuging.

B. *Single and multi-effect evaporator*

Before invention of a multi effect evaporator, single effect evaporator was used to serve the purpose evaporation in sugar industry. In single effect evaporator, the steam is fed to the evaporator which condenses on the tube surface and the heat is transferred to the solution. The saturated vapour comes out from the evaporator and this vapour either may be vented out or condensed. The concentrated solution is taken out from the evaporator. Now we can see if we want the further concentrate, the solution has to be sent into another similar evaporator which will have the fresh steam to provide the necessary heat.

It may be noted that in this process the fresh steam is required for the second evaporator and at the same time the vapour is not utilized. Therefore it can be said the single effect evaporator does not utilized the steam efficiently. The economy of the single effect evaporator is thus less than one. Moreover, the other reason for low economy is that in many of the cases the feed temperature remains below the boiling temperature of the solution. Therefore, a part of the heat is utilized to raise the feed temperature to its boiling point.To overcome the disadvantages of single effect evaporator, multi-effect evaporator is incorporated.

A multiple-effect evaporator, as defined in chemical engineering, is an apparatus for efficiently using the heat from steam to evaporate water. In a multiple-effect evaporator, water is boiled in a sequence of vessels, each held at a lower pressure than the last. Because the boiling temperature of water decreases as pressure decreases, the vapour boiled off in one vessel can be used to heat the next, and only the first vessel (at the highest pressure) requires an external source of heat.

The multiple-effect evaporator was invented by an African-American inventor and engineer Norbert Rillieux. Although he may have designed the apparatus during the 1820s and constructed a prototype in 1834, he did not build the first industrially practical evaporator until 1845. Originally designed for concentrating sugar in sugar cane juice, it has since become widely used in all industrial applications where large volumes of water must be evaporated, such as salt production and water desalination.

C. *Principle of Multi-Effect Evaporator*

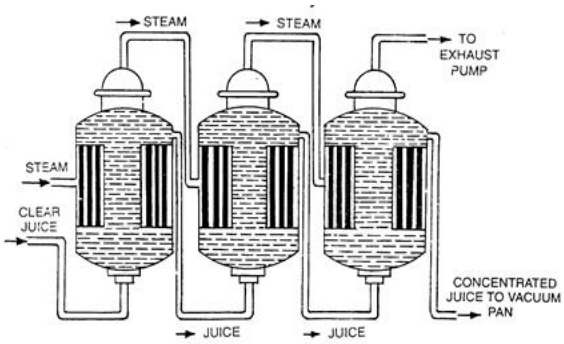

Fig.1.1 Multi-Effect Evaporator

The most important and most striking progress which has marked the history of sugar manufacture is no doubt the discovery of multiple effect evaporation, made about 1830 in Louisiana by Norbert Rillieux, an American of French origin. Evaporation in open pots over an open fire had already been abandoned, and evaporation of juice by heating with steam had been commenced. Rillieux's idea was the following: since steam is used for heating juice to evaporate the water which it contains, why not utilise in thesame way the vapour so furnished by the juice in order to heat further portion of juice, or to finish the evaporation already commenced by ordinary steam? One obstacle presents itself immediately: with steam at 110°C (230°F) (pressure 6 psi) juice at atmospheric pressure may be heated and evaporated. The vapour of juice so boiling at atmospheric pressure is 100°C or 212°F. But, with vapour at that temperature, it is not possible to boil juice at the same temperature: a temperature difference is necessary between the heating fluid and the fluid to be heated. Rillieux resolved this difficulty by putting the vessels following the first under vacuum. Water or juice boiling at 90°C, 23 cm of vacuum, at 80° under 40 cm of vacuum, at 70° under 52 cm, etc., it thus became possible to create the necessary temperature difference and to utilise the vapour arising from the juice in the first vessel to heat the juice in the second vessel, the vapour produced by the second to heat the third, and so on. This solution has the disadvantage of requiring an installation to create the necessary vacuum. But boiling under vacuum presents two great advantages: (a) it can increase the total difference in temperature between steam and juice by a quantity equal to the drop in boiling point of the juice between the pressure of the first and that of the last vessel. (b) It permits evaporation to be carried out at temperatures proportionately less dangerous, from the point of view of inversion and of colouration of the juice, as the juice becomes more concentrated and more viscous.

II. SUB-ASSEMBLIES OF MEE

A. *Evaporator vessel*

The standard multiple effect evaporator consists of a vertical cylinder, built on to the tubular calandria across which the heat exchange takes place. This cylindrical body terminates at the top in a "save-all" the object of which is to separate the liquid droplets which may be entrained with the vapour from the juice. Previously the evaporator bodies were always fabricated in cast iron. More recently, fabrication in steel plate is becoming more and more common. This permits of evaporator bodies which are less brittle, lighter and less expensive.

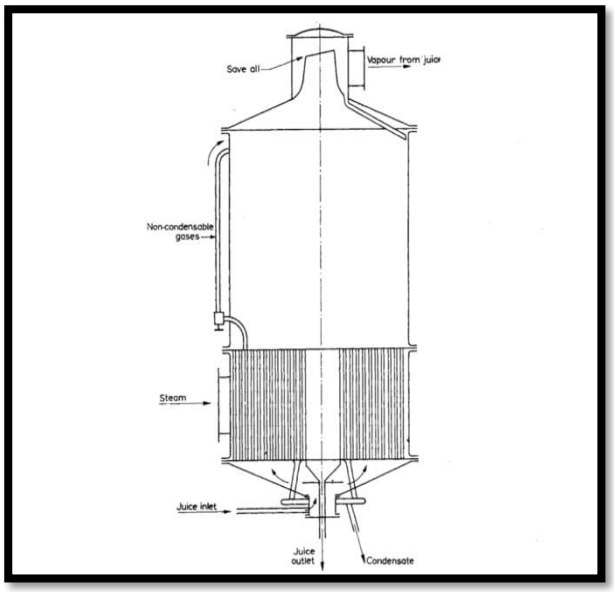

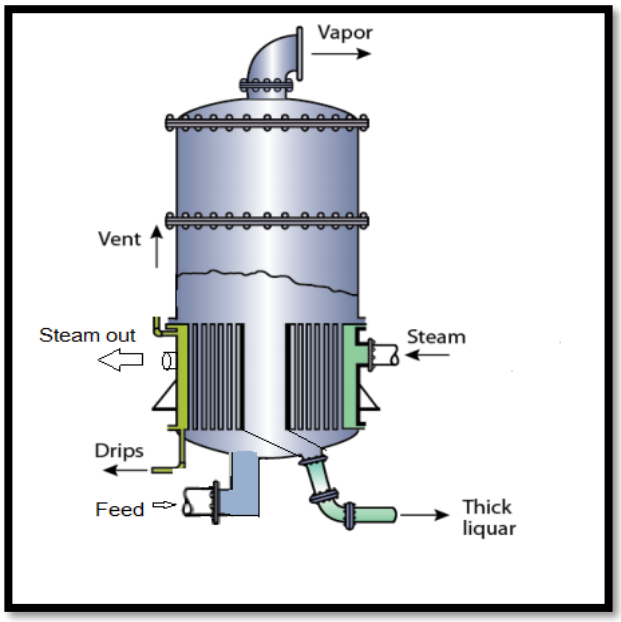

Fig.2.1 Evaporator Vessel

B. *The Calandria*

The calandria is a continuation of the shell or body of the evaporator. The various arrangementsispreferred: in this case leaks can communicate with the outside of the vessel only. If the calandria of the vessel is under pressure the juice or vapour escaping will be visible. Ifit is under vacuum the leak may be detected by the suction which will be produced on a flame placed close to the joint. The bore of the holes provided in the tube plates to take the tubes should be about 1/32 in. greater than the exterior diameter of the tubes. Vertical baffles are often placed in the calandria, with the object of compelling the steam to follow a certain path. Unfortunately it is impossible to remove or replace these metal baffles, which are subject to corrosion. When they are destroyed or damaged, the steam does not follow the path originally intended for it, and the position of the incondensable gas withdrawal pipes generally becomes unsuitable for the new steam path.

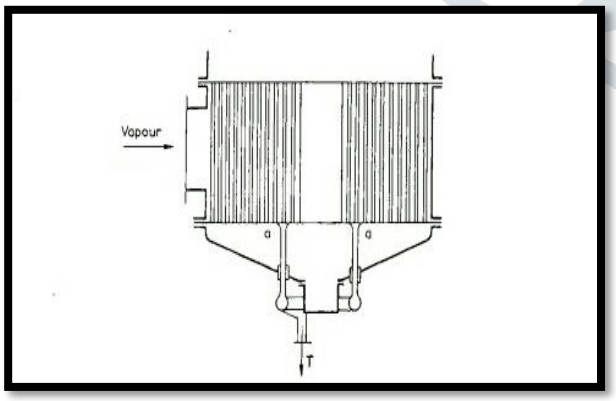

Fig.2.2 TheCalandria

C. *Centre well*

The calandria is generally designed with a wide tube or centre well, the object of which is to return to the bottom the juice which has been projected over the top tube plate. This centre well is often utilised to collect the concentrated juice in order to remove it from one vessel to the following vessel. Certain manufacturers replace the centre well by a lateral well or by a series of downtakes of small diameter distributed over the calandria.

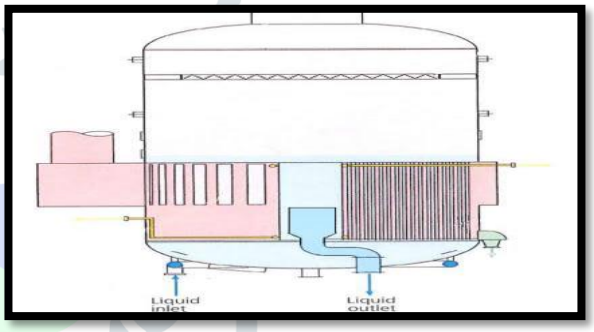

Fig.2.3 Center well

D. *Tubes*

The tubes of the calandria are made of steel or of brass. Tubes of brass have a much longer life. The best brass for the tubes of a multiple effect has the composition: Cu = 70% Zn = 30% or preferably: Cu = 70% Zn = 29% Sn = 1%. If the proportion of copper drops to 60% the metal becomes subject to attack by the incondensable gases.

E.*Catchhall*

It is generally placed at the top of the vessel, and is termed as “save all”, or “entrainment separator”.To avoid losses by entrainment, it is indispensable to furnish the evaporator vessels with a device for separating the drops of juice.

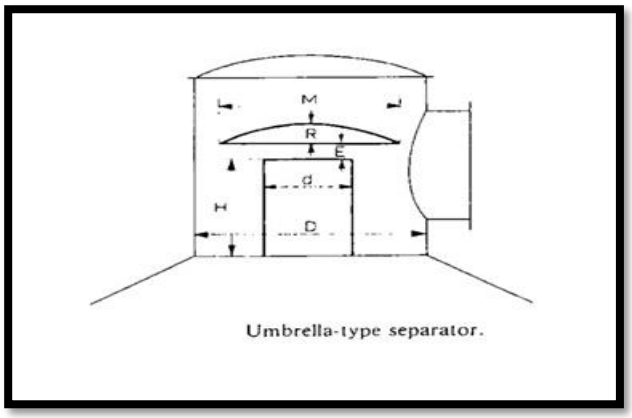

Fig.2.4 Catch hall

III. DESIGN CONSIDERATION

A. *Length of tubes*

The length of the tubes in standard multiple effects vary generally from 4 to 5 ft. However, recently European manufacturers have increased the length of the tubes as far as 15 ft. The evaporation rate does not gain anything from this, but for a given evaporation duty one obtains in this way vessels which take up less space and are more economical. The lengths most generally used today range from 6 to 8 feet. The length of the tubes should be about \ in. greater than the exterior distance between the tube plates. They will then project about \ in. outside the tube plates.

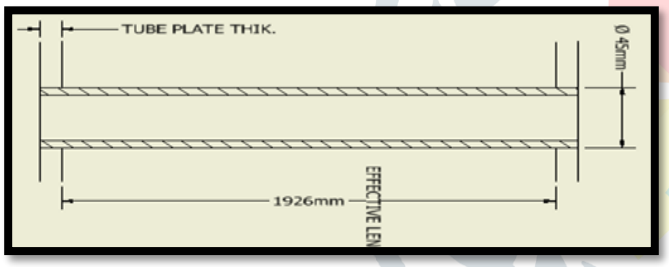

Fig.3.1 Tube effective Length and Diameter

B. *Diameter of tubes*

The tubes of multiple effects have an interior diameter varying from 1 in. to 2 in. Their thickness varies from 0.06 to 0.10 in. for steel tubes and from 0.06 to 0.08 in. for brass tubes. The commonest dimensions are as follows:

C. *Arrangement of the tubes*

The layout of the tubes in the tube plates generally follows a staggered arrangement.

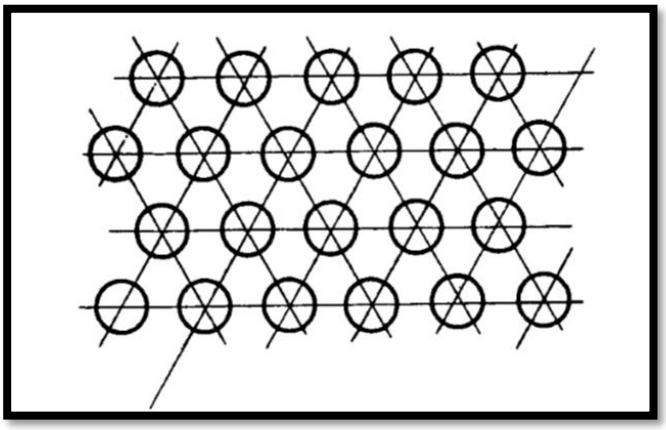

Fig.3.2 Arrangement of tubes

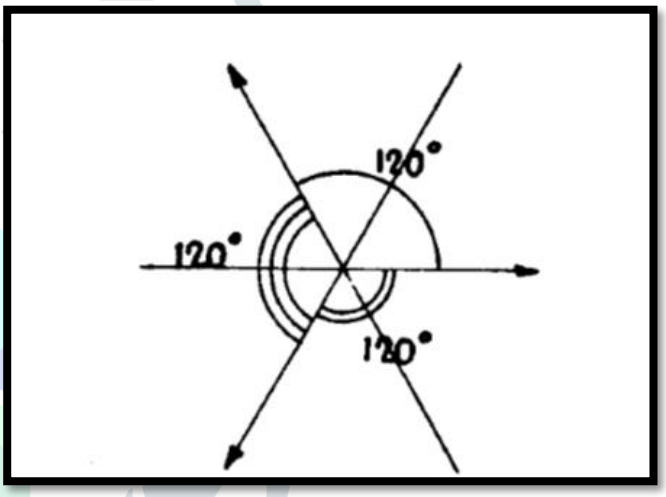

Fig.3.3Layout of staggered arrangement

This arrangement permits the greatest number of tubes to be accommodated per unit area of the plates, for a given distance between the tubes. The tubes are thus arranged in straight lines in three different directions at 120° to one another. Since this arrangement is that which permits the maximum density of tubes, what relationship should be observed between the exterior diameter de of the tubes and distance p between the tubes, centre to centre.

D.Vapour Lanes and Tube sheet Holearrangment

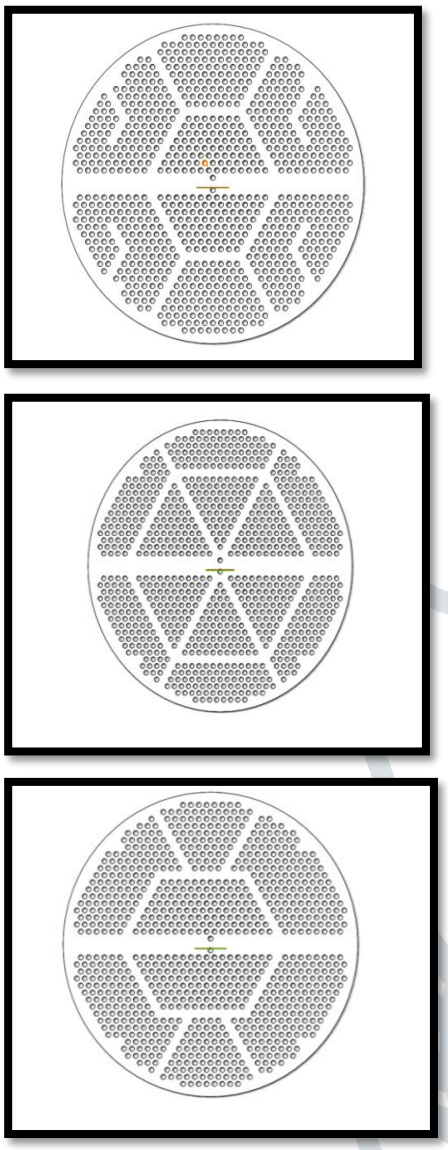

Fig.3.3 Vapour Lane Arrangements

IV. EXPERIMENTAL VALIDATION

A. *Technical Specification*

1) Evaporator type:-Robert type with semi-sealed downtake
2) Calandria height:- 2.9m
3) Body height:-5.5m
4) Bottom cone thickness:-22mm
5) Calandria thickness:-16mm
6) Body thickness:-16mm
7) Overall height:-12.024m
8) Tube plate thickness:-Top & bottom=32mm
9) Water filled equipment load:-210tonnes
10) Total no. of nozzles:- 18

B. *Material Conditions*

1) Tube plate: - IS 2062-2011
2) Tubes: - Stainless steel 304
3) Calandria: - IS 2062-2011 # All Nozzles: - IS 1239- Grade1
4) Body: - IS 2062-1192 or equivalent # Nozzles: - IS 1239-Grade1
5) Catch hall material details:-
   i. vent:- SS409
   ii. Centrifugal Other:- IS 2062-1992
   iii. Connection:- IS 1239-Grade C

C. *Inputs*

1) Heating surface=2000m$^{2.}$
2) Tube O.D.=45mm
3) Tube thickness=1.22mm
4) Tube length=2000mm
5) Tube plate thickness=32mm
6) Tube expansion allowance=5mm
7) Legment=10mm
8) Tube clearance=0.3mm
9) Tube plate hole clearance=0.1mm
10) Proportional factor(β)=0.9
11) % of downtake diameter on tube plate area=20%
12) Inlet vapour temperature=103^{0}C
13) Outlet vapour temperature=93^{0}C
14) Velocity of inlet vapour=30m/s
15) Velocity of outlet vapour=35m/s
16) Velocity of condensation=0.6m/s
17) Evaporation rate of body=25kgs/m^2/hr
18) Inlet vapour specific volume=1.514m^3/kg
19) Outlet vapour specification volume=2.124m^3/kg
20) Specific volume of vapour= 21.03 m^3 /kg

D. *Calculated Dimensions*

1) Number of tubes:

   a. Main diameter of tube= 43.78mm
   b. Effective length of tube= 1.926m
   c. Number of tubes= 7550

2) Downtake diameter and tube plate diameter

   a. Tube pitch= 55.4mm
   b. Tube plate area required for tubes only= 26.75611m^2

c. Tube plate diameter required for tubes only= 5.83669m
d. Diameter of single downtake= 1170mm
e. Area of downtake= 1.0751m^2
f. Total area of tube plate= 27.8312m^2
g. Final diameter of tube plate= 5952.8mm
h. Total area of peripheral downtake= 251327.41mm^2
i. Available area of central downtake= 823804.1358mm^2
j. Diameter of central downtake= 1024.1581mm

3) Diameter required for vapour inlet and diameter of calandria in vapour entry:

a. Number of vapour entries= 2
b. Evaporation rate of body= 25 kgs/m^2/hr
c. Vapour required for calandria= 50000 kgs/hr
d. Total area of vapour entry=0.7009 m^2
e. Diameter of steam entry= 700mm
f. Area of each steam entry=384845.1mm^2
g. Width of steam entry = 200mm

4) Vapour outlet pipe diameter:

a. Vapour volume =29.5m^3/s
b. Vapour outlet pipe diameter=1050mm

5) Diameter of condenser:

a. Volume of condensate=13.8888m^3/s
b. Condensate pipe diameter each=150mm

6) Toxic Gases:

a. Cross section area of non-condensable gases= 200cm^2
b. Number of non-condensable gases= 6
c. Diameter of each non condensable gas line= 65.147mm

7) Vapour space height:

a. Vapour space height = 5000mm

8) Velocity in vapour space of the body:

a. Vapour volume = 29.5m^3/s
b. C/S area of body = 27.88m^2
c. Velocity in vapour space of body=1.058m/s

9) Calandria shell thickness:

a. Maximum allowable pressure = 3 kg/cm^2
b. Allowable stress =1400kg/cm^2
c. Joint efficiency =0.7
d. Corrosion allowance =1.5mm
e. Calandria shell thickness= 12mm
f. Calandria ID=5920mm

10) Vapour shell thickness:

a. Maximum allowable pressure = 2kg/cm^2
b. Allowable stress =1400kg/cm^2
c. Joint efficiency =0.7
d. Corrosion allowance =1.5mm
e. Vapour shell thickness=8mm

11) Tube plate thickness:

a. Maximum allowable pressure = 2.728 kg/cm^2
b. Allowable stress =1400kg/cm^2
c. Modulus factor for MS sheet= 210000
d. Corrosion allowance = 1.5mm
e. Tube plate thickness= 8mm

V. CAD MODEL

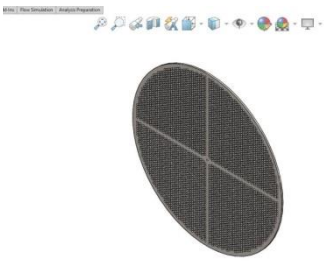

Fig.5.1. Tube Sheet

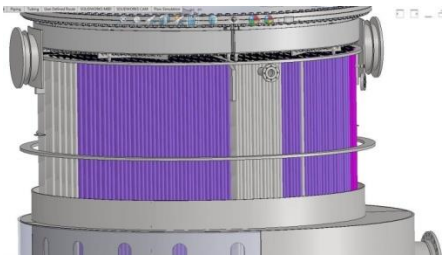

Fig.5.2. Vapour lanes pattern

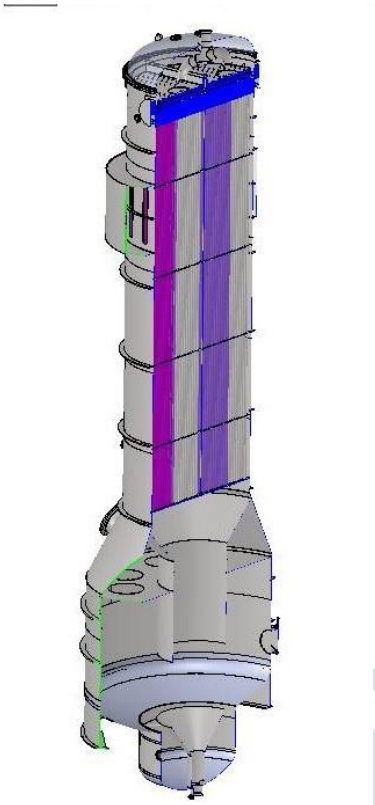

Fig.5.3. Section View

VI. ANALYSIS

A. Material1: Plain Carbon Steel

1) Young's Modulus (E) = 210GPa

2) Tensile Strength= 400MPa

3) Poisson's Ratio= 0.28

4) Density = 7800kg/m^3

5) Thickness = 10mm

6) Overall deformation = 11mm

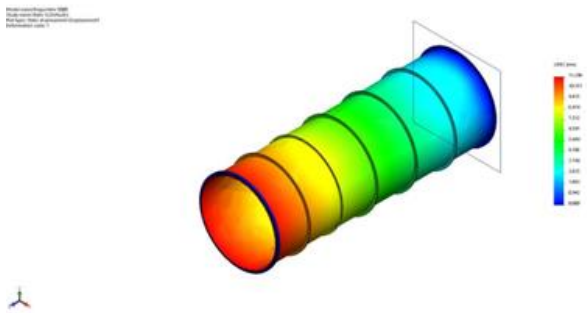

Fig.6.1. Thermal Analysis of PCC

B. Material2: Stainless Steel 304

1) Young's Modulus (E) = 190GPa

2) Tensile Strength = 517MPa

3) Poisson's Ratio =0.29

4) Density = 8000kg/m^3

5) Thickness = 12mm

6) Overall deformation = 2mm

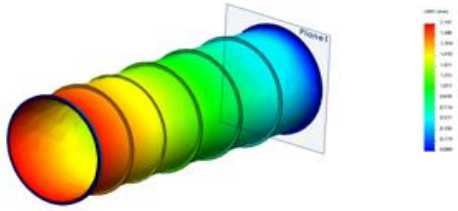

Fig.6.2. Thermal analysis of SS304

VII. CONCLUSION

As per the results of various thesis and research paper it is found that the effects required for a sugar industry is completely depends on a scale of industry. For large scale industries it is well effective to use multi effect evaporator about 7 to 8 effects for efficient utilization of a steam along with necessary quality and quantity of a condensate from each effect. For small scale industry it is of no use to have more than 3 effect evaporator.

It is seen that the feed of the sugar juice in tubes should be from bottom to top. By supplying juice from top to bottom, the time available for heating the juice will be less as juice will travel faster due to gravity. With flow of juice from bottom to top, the juice will travel slowly from bottom to top, reaches top of the tube and then it will flow from central downtake. Thus time available for heating will be more.

Based on standard formulae and taking reference of design data book, the various dimensions of evaporator are calculated.

While designing stage it is observed that there are four main parameters which affect the performance of a multi effect evaporator. Those four parameters are length of tube, diameter of tube, material of body and arrangement of vapour lanes. Length and diameter of tube is calculated according to capacity and temperature required.

Arrangement of vapour lanes is so designed so that the entire tubes are heated up equally. Material of entire structure depends on various factors. The material selected should be having enough thermal conductivity so that heating of juice is done effectively. Also the heat transfer to surrounding should be as low as possible. The material is selected according to standard material selection charts by comparing various parameters required. Further the material is tested by performing thermal analysis. In thermal analysis we found that for Plain Carbon Steel, at the temperature of 103°C, the overall deformation was

found to be 11mm. Instead for material Stainless steel 304, overall deformation was 2mm. So for evaporator body, material selected is Stainless Steel 304.

ACKNOWLEDGMENT

It is indeed a great pleasure and moment of immense satisfaction for me to present a seminar on **"Design & Analysis of Robert Type Multi-effect Evaporator"** amongst a wide panorama that provided us inspiring guidance and encouragement, we take the opportunity to thanks those who gave us their indebted assistance. We wish to extend our cordial gratitude with profound thanks to our internal guide **Prof. P. H. Biradar** for his everlasting guidance. It was his inspiration and encouragement which helped us in completing our paper work. Also special thanks to **Mechatol Engineering solutions** for sponsoring our project.

Our sincere thanks and deep gratitude to Head of Department, **Dr. N. P. Sherje** and other faculty member, but also to all those individuals involved both directly and indirectly for their help in all aspects of the project.

At last but not least we express our sincere thanks to our institute Principal**Dr. A. V. Deshpande**for providing us infrastructure and technical.

REFERENCES

[1] B.J. Burke, "Modelling and multi-objective optimization of a sugar mill based multi-effect evaporator set", Wilmar Sugar Pioneer Mill, Brandon, QLD, 4808, Australia. (2014)

[2] SomchartChantasiriwan, "Surface Area Distribution of Multiple-effect", Faculty of Engineering, Thammasat University. (2017)

[3] Kemal Ermis, IhsanKucukrendeci and Murat Karabektas, "Investigation of Multiple Effect Evaporator Design." (2017)

[4] HumbertoHeluane a, AnıbalM.Blanco b, Marıa RosaHernandez a, J.AlbertoBandoni b, "Simultaneousre-design and scheduling of multiple effect evaporator systems."(2011)

[5] M. Higa a,*, A.J. Freitas a, A.C. Bannwart b, R.J. Zemp c, "Thermal integration of multiple effect evaporator in sugar plant." (2008)

[6] Yinghua JIANG, Lixia KANG, Yongzhong LIU, "Simultaneous Synthesis of a Multiple-Effect Evaporation System with Background Process."(2018)

[7] L.M.M. Jorge a, A.R. Righetto a, P.A. Polli a, O.A.A. Santos a, R. MacielFilho, "Simulation and analysis of a sugarcane juice evaporation system."(2010)

[8] William L. Luyben, "Dynamic simulation of multi-effect evaporators."(2018)

[9] OP Thaval, R Broadfoot, "Capital cost model for robert evaporators."(2014)

[10] E. Hugot, "Handbook of cane sugar engineering."(1986)