Automatic Hand Brake System with Active Seat Belt

Prof.S.C.Shinde Yadnyesh Patil, Nitish Mane,
Prajakta Nikam,Niketan Kshirsagar
Department of Mechanical Engineering ,Savitribai Phule Pune University
Assistant Professor at Smt.Kashibai Navale College of Engineering,Pune Maharashtra
Student from Mechanical Department Of Smt.Kashibai Navale College of Engineering Pune

ABSTRACT

Seat belt with hand brake is implemented in car to ensure drivers safety. The increase in number of loss of life in accidents is due to driver's negligence to wear seat belt and active hand brake though it is strictly enforced by law. The aim of our project is to make seat belt wearing compulsory for vehicle propulsion using hand brake system. We can achieve it by using pneumatic setup along with handbrake.

The modification to be done ensures that the driver wears seat belt during driving. Here the seat belt of the car activates the hand brake (parking brake) through a pneumatic cylinder. When the seat belt activates the push button type DC valve an outward stroke is been obtained in the pneumatic cylinder through an air compressor which is used to release the hand brake. Similarly during the retracing stroke of the piston the hand brake is been engaged.

Keywords— Handbrake, seatbelt, pneumatic cylinder, microcontroller

I. INTRODUCTION

A handbrake is an additional braking mechanism installed on all commercial vehicles that's completely separate from foot pedal-operated In cars the parking brake, also called hand brake, emergency brake, or brake is a latching brake, usually used to keep the vehicle stationary. Most commonly used to prevent the vehicle from rolling when it is parked.
Automobile hand brakes consist of a cable directly connected to the brake mechanism on one end and to a lever at the driver's position. Using your handbrake to stop a moving car can harm the brake system.

This is because a centrally located and electrically powered compressor, that powers cylinders and other pneumatic devices through solenoid valves, can often provide motive power in a cheaper, safer, more flexible, and more reliable way than a large number of electric motors and actuators .Hand brakes have a ratchet locking mechanism that will keep them engaged until a release button is pressed. This is used to prevent the lever of hand brake from falling down when it is been engaged. In our project the pneumatic cylinder itself holds the hand lever through a clamp welded over it so the release button is been disengaged from the hand brake. A clamp is being welded to the body of the handbrake to couple with the cylinder.

II. PROBLEM STATEMENT

In conventional parking brake actuation involves the human interference. Without pulling or pushing the lever, the parking brake will not work. Also, sometimes due to negligence or in emergency conditions, we humans often forget to apply parking brakes. This may lead to rolling of vehicle in case of slopes and collision with other vehicles in parking area. Without pulling or pushing the lever, the parking brake will not work. Also, sometimes due to negligence or in emergency conditions, we humans often forget to apply parking brakes. This may lead to rolling of vehicle in case of slopes and collision with other vehicles in parking area. Sometimes if service brake fails parking brakes are used as a emergency brake to stop the vehicle.

A.OBJECTIVES

- Automatic hand break retrieval system after the ignition switch is in ON condition. With the seat belt assisted condition.
- Seat belt is implemented in car to ensure drivers safety. To reduce the number of loss of life in accidents due to driver's negligence to wear seat belt though it is strictly enforced by law.
- Vehicle can't start until the seatbelt is fastened and handbrake automatically release when vehicle is on situation with the help of gear lever.

III.WORKING METHODOLOGY

There are four touch sensors placed on door edges. One load sensor is placed at the bottom of the seat to detect the occupancy. One variable reluctance sensor is placed near the roller of the seat belt webbing.

One touch sensor is placed at the buckle of the seat belt. Ones all doors are locked, occupancy is detected, ones the belt webbing is stretched and buckled the respective sensor sends signal to the micro controller placed under the seat , which passes current to the wheel locking mechanism. Due to which wheel lock is removed, which leads to activation of buckle lock and hence the seat belt buckle gets locked

IV.CONSTRUCTION

. Automatic handbrake retrieval system with active handbrake consist of following components

- Hand brake set
- Seat belt and locket
- Clamp
- Pneumatic cylinder
- Microcontroller
- 5/2 DC valve
- Hoses
- Limit Switches
- Sensor

Brakes are one of the safety systems in a motor vehicle. The main functions of brakes system are to decelerate the vehicle, to maintain the vehicle's speed during downhill operation and finally to park the vehicle stationary either on a flat or slope road condition. The first two functions are related to the service brakes, while the last function is referred to the secondary or parking brakes. Conventional parking brake actuation involves the human interference.

Working of the setup

The inlet port of the 5/2 pneumatic valve is been connected to the compressor, The 5/2 valve is been integrated within the seat belt locket in such a way that the seat belt end activates the push button, Double acting cylinder is been clamped along the body of the hand brake.

The end of the piston rod is bolted with the clamp connecting with the hand brake A button type pneumatic valve(5/2 valve) is being integrated within a seat belt locket. When the seat belt is been locked it activates the push button. By this pneumatic cylinder is been activated. The pneumatic cylinder is been welded with the clamp connected with the hand brake lever. During the forward stroke of the piston the lever of hand brake is been pushed down and the brake is released. On return stroke the lever is brought to its initial position and the brake is engaged.

V. FIGURE AND EQUATIONS

The conventional handbrake system is a manually operated and uses a hand lever and cables for its operation. At the time of engagement, the hand lever is pulled upwards creating tension on the cable eventually creating the braking force required for locking the wheels. Disengagement requires releasing of the pawl from the ratchet which is accomplished by pressing the button incorporated on the hand lever

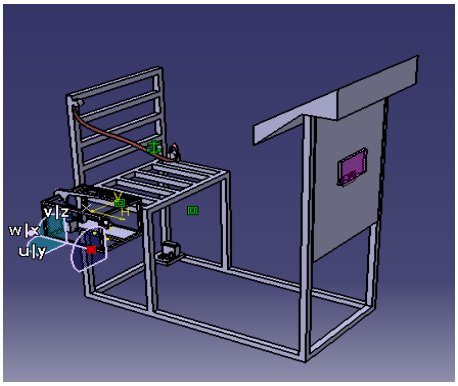

1.1.1 Output Stroke

The force exerted by a double acting pneumatic cylinder can be expressed as

$F = P A$

$F = P\pi d^2/4$ -------- (1)

where,

F = force exerted (N)

P = gauge pressure (N/m^2, Pa)

A = full bore area (m^2)

d = full bore piston diameter (m)

1.1.2 Input Stroke

The force exerted by double acting pneumatic cylinder on outstroke can be expressed as (1). The force exerted on in stroke can be expressed as

$F = P \pi (d_1^2 - d_2^2) / 4$ -------- (2)

where

d_1 = full bore piston diameter (m)

d_2 = piston rod diameter (m)

1.1.3 Force calculations:

Pressure of the cylinder = 200kpa

Diameter of the cylinder = 25mm

Diameter of the piston rod = 10mm

1.1.4 Double Acting Piston outstroke:

The force exerted by a single acting pneumatic cylinder with 1 bar (105 N/m^2) and full bore diameter of 100 mm (0.1 m) can be calculated as

$F = P \pi d^2 / 4$

$= (2*10^5\ N/m^2)\ \pi\ (0.025\ m)^2/ 4$

$= 98\ N$

1.1.5 Double Acting Piston in-stroke:

The force exerted from a single acting pneumatic cylinder with 2 bar (105 N/m2), full bore diameter of 25 mm (0.025 m) and rod diameter 10 mm (0.01 m) can be calculated at

$F = P \pi (d_1^2 - d_2^2) / 4$

$= (2*10^5\ N/m^2)\ \pi\ [(0.025\ m)^2 - (0.01\ m)^2] / 4$

$= 82\ N$

VI. ADVANTAGES

1. The cost of this system is much lower than the similar systems used in high end cars which use electronic controllers which are way more expensive than this system.
2. If a driver is not confident on climbing a hill in stop and go conditions, then he may use the system and find it very easy to park as well as start ascending on the hill.
3. Use of various sensors like proximity sensors make it is very easy to operate and modify the system. Increasing number of sensors in various different places can help and improve this system by engaging the handbrake and disengaging it in different conditions.
4. Number of sensors used can be reduced to reduce cost and the engaging and disengaging may be done for minimum conditions.
5. Manual interaction regarding the handbrake is completely reduced causing almost no error in operation of the handbrake.
6. Very fast engagement and disengagement as possible and there is no lag in operation of the handbrake

VII. DISADVANTAGES

1. Pneumatic system needs compressor which will consume power thus reducing the efficiency of the car overall.
2. For manual override of the handbrake brake system buttons need to be provided which will increase the overall cost of the system.
3. Use of sensors means the load created on the battery will be more.

CONCLUSION

In modern automobiles, all the vehicles come equipped with microcontrollers and DSP processors for various sensing and control operations. Taking advantage of this phenomenon. We have developed a mechanism for providing drive with more security through an extra layer of lock near the seat belt buckle. The driver is not permitted to drive without the seatbelt.

This reduces the risk of fatality to the driver and the occupants. The ignition locking is available in several high end vehicles but additional locking system near the seat belt buckle, which does not permit driver to remove the lock while driving is missing in such systems. Through our testing we have provided mechanism for safety even during conditions where a driver applies break, the system can be further tested by incorporating the same in real vehicles.

REFERANCES

[1] Ronald Van Houten, Ian J. Reagan and Bryan W. Hilton *"Increasing seat belt use: Two field experiments to test engineering-based behavioral interventions"* Western Michigan University, Department of Psychology, 3700 Wood Hall, Kalamazoo, MI 49008, United States 2014.

[2] Charles M. Farmer and JoAnn K. Wells "*Effect of enhanced seat belt reminders on driver fatality risk"* Insurance Institute for Highway Safety, 1005 North Glebe Road, Arlington, VA 22201, USA 2010.

[3] Alena Høye and Truls Vaa "*Will announcing seat-belt checkpoints reduce the non-use of seat-belts or increase other violations*" Institute of Transport Economics, Gaustadalléen 21, 0349 Oslo, Norway 2010.

[4] Alena Hoye "*How would increasing seat belt use affect the number of killed or seriously injured light vehicle occupants*" Institute of Transport Economics, N-0349 Oslo, Norway 2016.

[5] Wan Noor Haida Wan Ahmad Kamal, Mohamad Ghazali Masuri, Akehsan Dahlan and Khairil Anuar Md Isa "*Seat Belt Compliance and Quality of Life among Educated Young Adults in an Urban*" University Occupational Therapy Department, Faculty of Health Sciences, Universities Teknologi MARA, Malaysia 2015.

[6] David G. Kidd "*Response of part-time belt users to enhanced seat belt reminder systems of different duty cycles and duration*" Insurance Institute for Highway Safety, 1005 N. Glebe Rd., Arlington, VA 22201, United States 2012

[7] Sachin s. dharia, sachin s. bhopale prathmesh p. kumbhar3, kedar s. pathak
"*advancements in automatic hand brake system 4th International Conference on science*", Technology and Management ISBN:978-81-932074-8-2 15th May 2016

[8]1naveen kumar.b, lokesh raj.k, ramerow jacob.r, 4santhosh.b,ravi prasad.p.s "*design of seatbelt activated handbrake system in cars"* International Journal of Mechanical And Production Engineering, ISSN: 2320-2092, Volume- 2, Issue-10, Oct.-2014

[9] Sushil kumar1, vishal kumar "*automatic emergency braking system*" International Journal of Research in Science & Engineering e-ISSN: 2394-8299 Volume: 1 Issue: 3 p-ISSN: 2394-8280 IJRISE

[10] Hemalatha b k1, p pooja, chaithra m ,megha s4,rakshitha r t "*automatic braking system for automobiles using IR sensor*" International Journal of Advanced Research in Electrical, Electronics and Instrumentation Engineering (An ISO 3297: 2007 Certified Organization) Vol. 5, Issue 5, May 2016 ISSN (Print) : 2320 – 3765 ISSN (Online): 2278 – 8875