Rotary Automated Car Parking System

Raviraj P. Shelke#1, Shubham A. Chiplunkar#2, Neha R. Lokhande#3, Sachin P. Velapure#4
Department of Mechanical Engineering, Sinhgad Institute of Technology and Science, Narhe, Savitribai Phule Pune University, Pune.

Abstract— **The present project work is aimed to design and develop a working model of a Rotary Automated Car Parking System for parking 8 cars. This system has been implemented to reduce the excess use of land space which is already very scarce in metro cities. The chain and sprocket mechanism are used for driving the parking platform and a motor shall be implemented for powering the system and indexing the platform. It is an amalgamation of the already developed parking systems with the added advantage of reduced space occupancy by the design of a simpler and compact parking system that is rotary and occupies circular parking space. By testing and analyzing the working model we can definitely get the view to develop the parking lots at difficult and busy commercial places.** ***Keywords*- Rotary Automated Car Parking System, Mechanism, PLC, Microcontroller and Computerization.**

I. INTRODUCTION

The Rotary Automated Car Parking System (RACPS) belongs to the class of rotary smart car parking systems. The traditional parking systems such as multilevel or multi-storey car parking systems (non-automated), robot car parking systems, automated multilevel car parking systems etc have been implemented on a huge scale. But these systems have a major disadvantage of large space consumption which is successfully eliminated with the use of a rotary car parking system. Moreover, the latter provides the added benefits of flexible operation without the need of an attendant and added security and least chances of vehicle damage. Since the model makes use of composite parts, it is easy to assemble and dismantle and is thus more convenient than the traditional car parking systems.

The rotary model is specifically designed to accommodate multiple cars in the horizontal space of two. Parking spaces cannot cope with the growth of the number of vehicles. In many urban housing societies, the parking space ratio is 1:1. The vehicles parked randomly, cause the major problem faced in most of the metropolitan cities. The idea is to park and move cars with no disturbance to the already parked cars in RACPS.

The advancement and progress of nations is measured by the possibility of their use and application of latest invented technologies in all aspects of life. Control engineering is one of the aspects which have been given a great deal by many researchers. Ranging from the earliest parking garages renovated horse barns to fully automatic parking structures, innovative thinkers have attempted to devise clever ways to park vehicles. The rapidly growing urban population of India is creating many problems for the cities, vehicle parking being one of the major problems faced almost every day. To avoid these problems, recently many new technologies have been developed that help in solving the parking problems to a great extent.

II. EXISTING SYSTEMS

The traditional parking systems such as multilevel or multi-story car parking systems (non-automated), robot car parking systems, automated multilevel car parking systems etc. have been implemented on a huge scale. But these systems have a major disadvantage of large space consumption which is successfully eliminated with the use of a Rotary Car Parking System. Moreover, the latter provides the added benefits of flexible operation without the need of an attendant and added security and least chances of vehicle damage. Since the model makes use of composite parts, it is easy to assemble and dismantle and is thus more convenient than the traditional car parking systems.

III. PROPOSED SYSTEM

This system provides the added benefits of flexible operation without the need of an attendant and added security and least chances of vehicle damage. Since the model makes use of composite parts, it is easy to assemble and dismantle and is thus more convenient than the traditional car parking systems. The rotary model is specifically designed to accommodate multiple cars in the horizontal space of two cars. The structure can accommodate eight cars in the space of two or can even be customized to hold a greater number depending upon the requirements of the user and can be efficiently put to use in much space crunched areas. Although automated parking like multilevel parking has made the condition a little better than the earlier situation, there is still scope for improvement. This is because people still face problems of space availability, searching time and waiting time in public places like malls, multiplexes, railway stations, shopping streets etc. With the new technology of smart parking, majority of these issues will be solved.

IV. METHODOLOGY

Studying the mechanism of Rotary Automated Car Parking System Studying the working of Chain & Sprocket Mechanism

↓

Studying the Working of Components

↓

Material Selection for Mechanism

↓

CAD model

↓

Design the mechanism for Rotary Automated Car Parking System

↓

Fabrication of Prototype

V. SCHEMATIC DIAGRAM

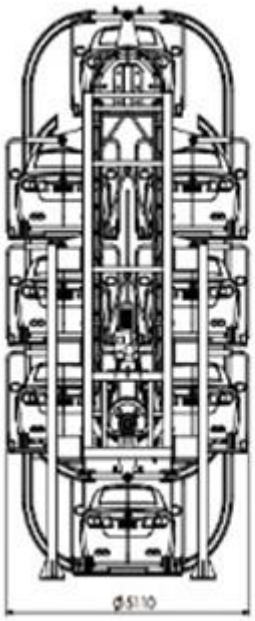

Fig.1(a) Front View

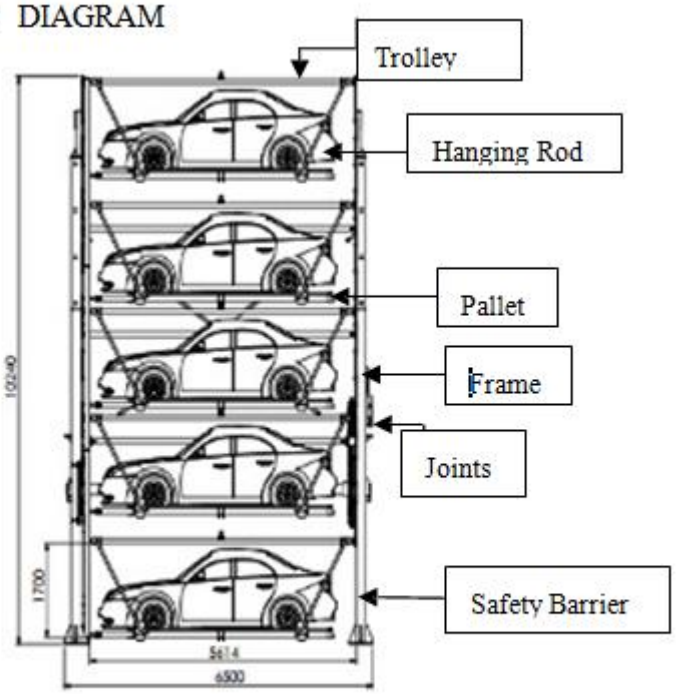

Fig.1(b) Side View

Fig.2 Actual View to be

VI. WORKING PRINCIPLE

The motor is connected to the shaft of the main shaft. The motor is controlled by means of a control unit. (RFID) The other shafts for the parking shells are connected to the shaft. It differs according to the parking system & multi vehicle (car, truck, etc.). The motor should be mounted such that it could withstand high loads. When the user wants to park his vehicle, he has to search for the parking shell by running the motor first of all. While getting the appropriate parking shell the user should stop the motor and drive the vehicle into the shell. After the parking of the first vehicle the next vehicle also follows the same procedure to get parked into the shell. The shells are arranged by means of pin support in the model so that it can be hang in a horizontal position at any height.

VII. BLOCK DIAGRAM

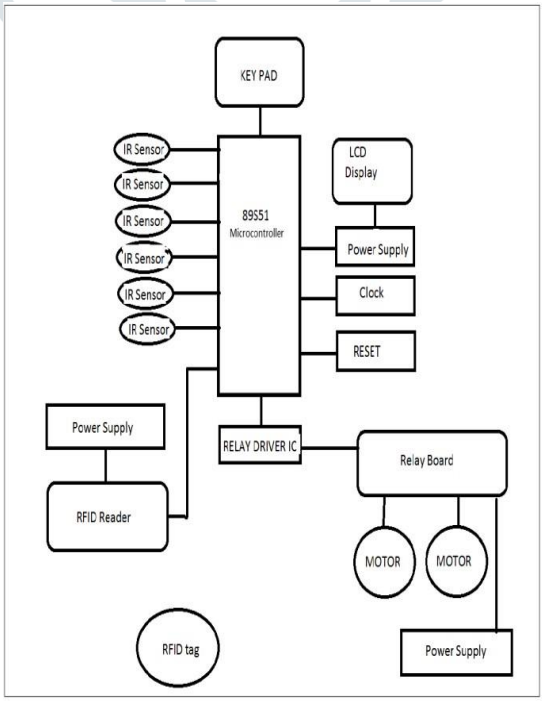

VIII. REGULATED POWER SUPPLY SYSTEM

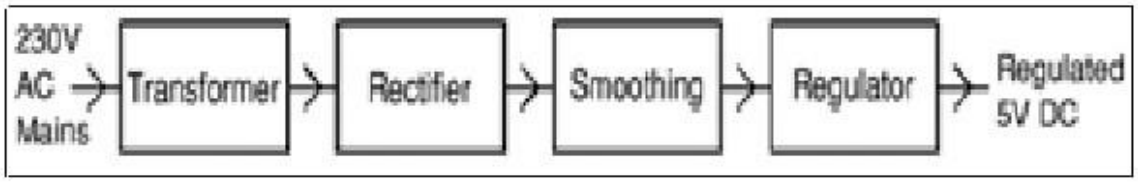

-

IX. DESIGN OF COMPONENT BASED ON ANALYSIS

1) *Pallet:*

The design of pallet is done by referring following procedure.

1.1) Vehicle Specifications:

Vehicle size=4854mm*2197mm*1476mm

Wheel base = 3000 mm, Wheel track = 1800 mm

Max Weight of Vehicle= 1985 ~ 2500 kg

1.2) Pallet Specifications:

Thickness = 5 mm…. (Considering the load of vehicle & Analysis is done) Length = 5000 mm

Width = 2317.5 mm Height = 1650.7 mm Mass of a car is 2500 kg

Total load on pallet = 2500*9.81 = 24500 N

Load is applied on four points on the pallet where tires of the vehicle are assumed to be resting.

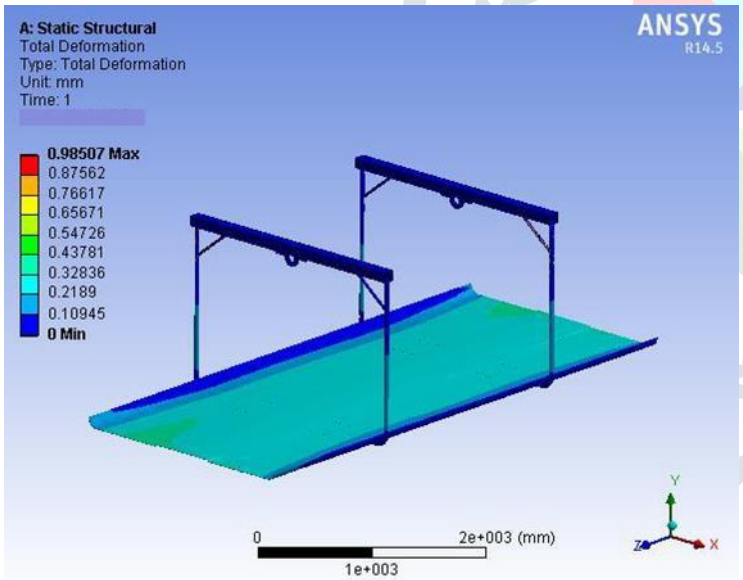

Fig.3 Pallet

2) Hanging Rod

Specifications and Calculation of Forces of Hanging Rod: Length = 5766 mm

Diameter = 100mm

Total load on the Rod = Weight of vehicle + weight of Pallet.

Mass of the Pallet = 575kg (Calculated Using CREO Software) = 575×9.81 + 2500×9.81 = 30165.75 N Now,

Using weight distribution of 66% on front mounting point and 34% on rear mount point, we have applied following loads on two mounting points of the rod.

F1 = 19909.395 N F2 = 10256.355 N

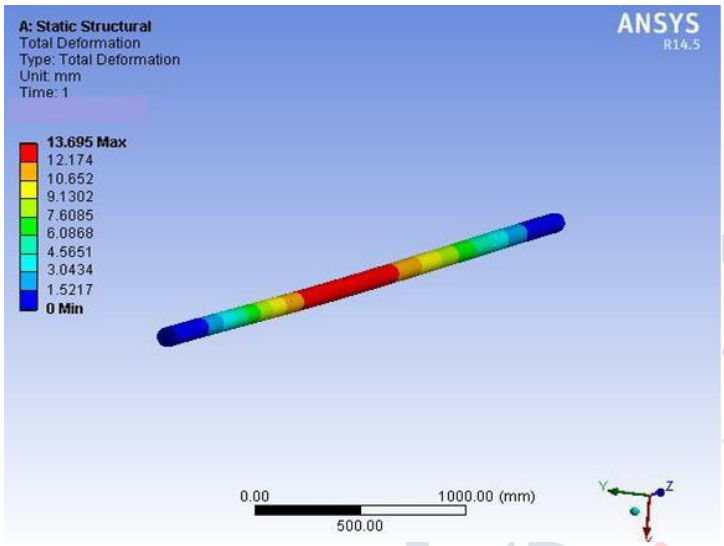

Fig.4 Hanging rod

3) Joint

Total load on a joint = [Weight of vehicle + Weight of Pallet + Weight of Rod] /2

= [575×9.81 + 2500×9.81 + 353×9.81] / 2

= 16814.34 N

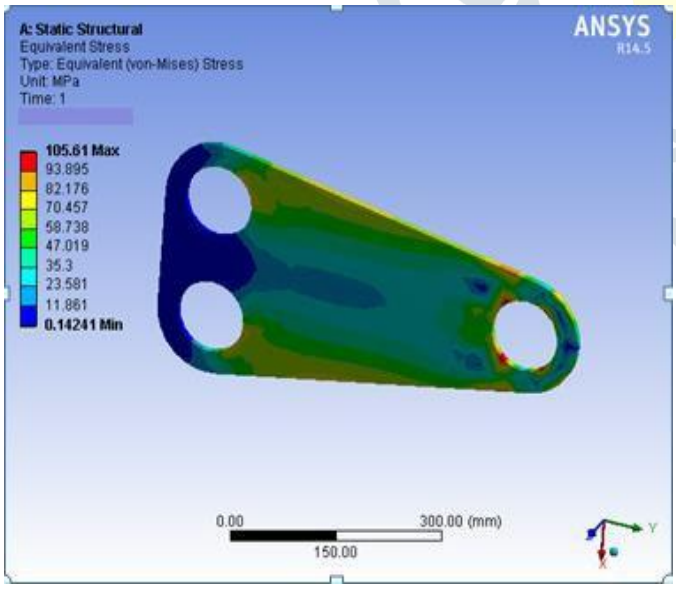

Fig.5 Joint

4) Frame

Dimensions of the Frame: Height: 10183.0 mm
Width: 4364.04 mm
Length: 7190.40 mm

Total load on the Frame = {Weight of vehicle + Weight of Pallet +Weight of Rod + Weight of Chain + Weight of Rotor + Weight of Joint + Miscellaneous}
= 2500×9.81+ 4600×9.81+ 2824×.81+ 1242×9.81 + 12348×9.81 + 144 + 17915.02
= 221027.92

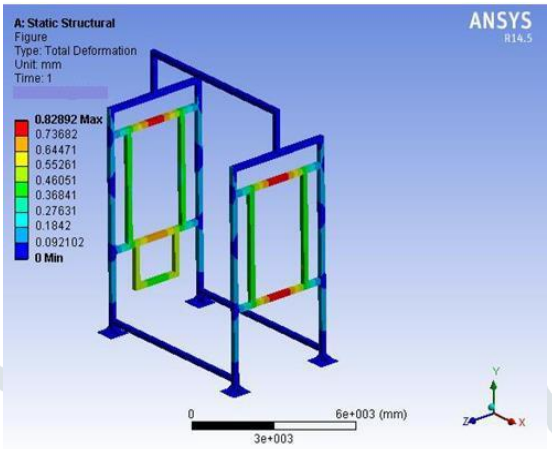

Fig.6 Frame

X. ADVANTAGES

- Less pollution.
- Security from theft.
- Avoid car damage.
- Less possibility of car accidents.
- Save space and time.
- Simple in operation and construction.
- Fuel consumption is less.
- Speedy system, moves smoothly.
- Less noise.
- It can be constructed and implemented in residential areas.
- Fully automatic operating, hence no human error.

XI. CONCLUSIONS

The RACPS has been designed and all the composite parts in it have been manufactured and assembled. Analysis of the model has to be done while developing a life size model. The mechanical model has been designed and the software as well as the control circuit has been implemented successfully. It demonstrates the working of the planned rotary parking system. The size and number of trolleys can be customized according to the needs and capacity of the organization or garage space availability.

XII. FUTURE SCOPE

The RACPS can be installed with a safety installation such as, whenever there is human movement in the system, the rotation of the system should be immediately stopped. The platforms can also be equipped with safety sensors guiding the movement of vehicles in the platforms. Moreover, the model can be programmed in such a way that the trolleys traverse the minimum possible distance during parking as well as the retrieval of the vehicle.

This automated car parking system can be installed with safety installations such as, whenever there is human movement in the system, the rotation of the platforms should be immediately stopped and also the platforms can also be equipped with safety sensors guiding the movement of vehicles in the platforms. It can be fully automated by integrating it with a panel board, such that whenever a particular number is called on the panel board, the respective platform should appear at the ground level. This calling can also be made more secured by providing each platform a specific password, so that only whenever a particular password is typed the platform is retrieved. A turn table can be incorporated with the system in front of the ramp of platform so that cars can be easily turned and parked into the platform. This is very useful in the areas where cars cannot turn easily to get into the platform.

ACKNOWLEDGMENT

It is our privilege to express our sincerest regards to our project guide, Mr. Sachin P. Velapure, for their valuable inputs, able guidance, encouragement, whole-hearted cooperation and constructive criticism throughout the duration of our project. We deeply express our sincere thanks to our Head of Department Dr. Kirankumar R. Jagtap for encouraging and allowing us to present the project on the topic "Rotary Automated Car Parking System"at our department premises for the partial fulfilment of the requirements leading to the award of B.E. degree. We take this opportunity to thank all our lecturers who have directly or indirectly helped our project. We pay our respects and love to our parents and all other family members and friends for their love and encouragement throughout our career. Last but not the least we express our thanks to our friends for their cooperation and support. We are very much thankful to Dr. Rajesh S. Prasad, Principal, Sinhgad Institute of Technology and Science, Narhe for providing all necessary facilities and guidance. I am thankful to those who have helped me in the successful completion of this project report.

REFERENCES

[1] Rahul. J. Kolekar, S.S. Gawade "Design and development of lift for an automatic car parking system" International Journal on Theoretical and Applied Research in Mechanical Engineering (IJTARME) Volume 3, 2014 ISSN (Print): 2319-3182.
[2] Mr. Prasad Pashte, Mr. Sanket More, Yogesh Maske "Design and analysis of Rotary Automated Car Parking System" International Journal for Scientific Research and development (IJSRD) Vol.4, Issue 04,2016/ISSN: -23210613.
[3] Chandni Patel, Monalisa Swami, Priya Saxena, Sejal Shah "Rotary Automated Car Parking System." International Journal of Engineering Science and Innovative Technology, Volume 4, March 2015
[4] Sawankumar G. Narone, Swapnil S. Chabukswar, Shriharh A. Valyal, Ravikant B. Hirapure, V. R. Solapure "Vertical Car Parking – A Prototype". International Journal of Emerging Technology and Advanced Engineering. Volume 5, April 2015 ISSN 2250-2459.
[5] Dal Young "Park Vertical Rotary Parking System. United States Patent Application Publication" Pub. No.: US 2004/0156699 A1 (19) PARK (43) Pub. Date: Aug. 12, 2004.
[6] Yatin Jog, Anuja Sajeev, Shreyas Vidwans and Chandradeep Mallick "Understanding Smart and Automated Parking Technology" International journal of u- and e- service and Technology (ijnusset) Vol.8, (2015), pp.251-262.
[7] Reference book by V. B. Bhandari, "Machine Design Data book" McGrawHills publication, 3rd Edition 2013.
[8] M Childs, "Parking Spaces; A Design, Implementation and Use Manual for Architects Planners and Engineers" McGraw-Hill, 2009.
[9] H Hwang, S Lee, "Expected Service Time Model for A Rotary ParkingSystem", Computer Industrial Engineering, vol 35, pp 559-562, 1998. (Pubitemid 128674778).
[10] F. B. Beer, E. R. Johnston Jr., "Mechanics of Material, Second Edition", McGraw-Hill, pp 701, s1992.
[11] M Childs, "Parking Spaces; A Design, Implementation and Use Manual for Architects Planners and Engineers" McGraw-Hill, 2009. [12] H Hwang, S Lee, "Expected Service Time Model for A Rotary Parking System", Computer Industrial Engineering, vol 35, pp 559-562, 1998. (Pubitemid 128674778).
[13] F. B. Beer, E. R. Johnston Jr., "Mechanics of Material, Second Edition", McGraw-Hill, pp 701, s1992.
[14] R. Cabrera-Cosetl, M. Z. Mora-Alvarez, and R. Alejos- Palomares," Self-Parking System Based in a Fuzzy Logic Approach," in Electrical, Communications, and Computers, Conielecomp 2009. International Conference on, 2009, pp. 119- 124.
[15] International Symposium on V.W. S. Tang, Y. Zheng, Sensor Networks," Proceedings of the 1st and J. Cao, "An Intelligent Car Park Management System based on Wireless Pervasive Computing and Applications, pp. 65-70, Aug 2006.