WORKING OF SPANNING TREE PROTOCOL

Richa Jain[1], Nahita Pathania[2], Navneet Malik[3]

Assistant Professor [(1,2,3)]

Department of Computer Science and Engineering, Lovely Professional University, Phagwara, Punjab[(1,2,3)]

Abstract—Whenever we connect three or more Layer 2 devices there are many issues like Broadcast storms, Mac instability, Bridge multiple frame transmission, and Switched Networks. So, to eliminate these problems IEEE 802.1D protocol was implemented in Layer 2 devices. It not only helps in reducing the above-mentioned problems but also combines two links connected to a single device to remove looping and increase load balancing so called Ether Channel. STP reduces the burden of network engineers by simply removing loops and automatically converging when network topology changes which helps in avoiding loops.

Keywords: IEEE 802.1, LAN, Spanning tree.

I. INTRODUCTION

Nowadays, because of the increase in the number of networks, the number of computer systems have also increased. So, to maintain these large numbers of networks, we have to maintain many network devices. It is highly impossible to put all these networking devices in one LAN. So, we connect these LANs using switches and bridges.

Since we are using many LANs, loops are created between layer 2 devices. These loops create many problems like Broadcast storms. Broadcast storms lead to frame flooding forever. Broadcast storms will turn the network off quickly [1]. To avoid these types of problems Spanning Tree Protocol is implemented in layer 2 devices. STP recognizes the loop and prevents the forming of a loop by blocking the respective redundant port. Once this protocol is implemented, it always runs in the background to check and prevent the loop forming between layer 2 devices by shutting down the redundant ports. Even, if the topology changes, STP automatically detects the loop formation and blocks the respective port.

The STP algorithm was first implemented in the DEC LAN Bridge in the mid of 1980's by Perlman which is defined in IEEE 802.1standard. [2] In this study, we are going to know how STP works and types of STP's, implementation and verifies whether it is implemented or not.

II. SPANNING TREE PROTOCOL

The Spanning Tree Protocol is documented in IEEE 802.1D format, also known as the Dijkstrja's Algorithm. It's implemented to provide a loop-free network topology in many current routers, bridges, and switches. To improve reliability, building layer2 networks with redundant network connections is common, but redundancy can lead to storms being broadcast. Spanning Tree Protocol provides a mechanism for network devices to learn network topology, select a root bridge and selectively block ports to form a loop-free spanning tree [3].

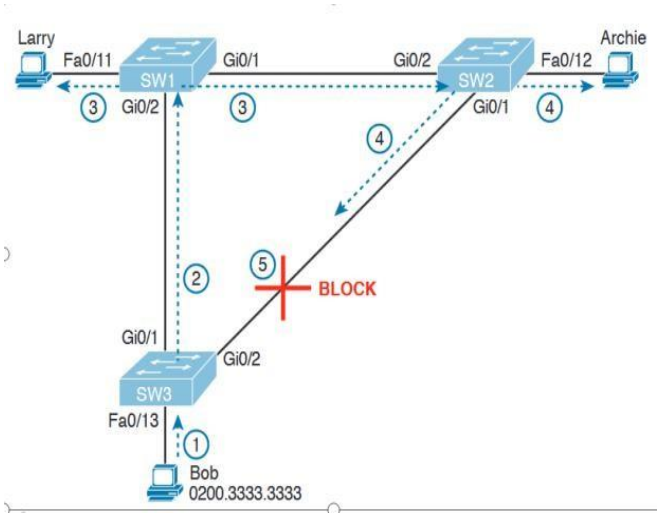

III. WORKING OF SPANNING TREE PROTOCOL

STP prevents loop creation by placing each port in either a forwarding or blocking state. Firstly, the Forwarding state is nothing but allowing frames and forwarding frames. On the opposite, the Blocking state doesn't let any traffic going through it, even though it receives frames it does not learn any Mac address from received frames. STP places ports either in forwarding states or in blocking state on the basis of the following criteria.

STP selects a root switch and makes sure that the root switch has all its working interfaces in forwarding state also known as root ports. Every non-root transfer sees one of its ports as having the least administrative costs between themselves and root. That is known as root price. STP places that port which is having the least cost in forwarding state and itself called designated port. Many switches are connected to same Ethernet segment. If two switches connected to the same link, then they compare the lowest root cost and the switch which is having the least cost will be in forwarding state. All the other interfaces will be fixed as blocking state.

The STP bridge ID (BID) is an 8-byte, unique value for each switch. The Bridge ID consists of a priority field of 2 bytes and a system ID of 6 bytes based on a common (burned-in) MAC address at each switch. Using a burned-in MAC address makes sure that the Bridge ID of each switch is unique.

STP defines bridge protocol data units (BPDU) messages that turn to the exchange of information. The most popular BPDU, called a Hello BPDU, contains lots of details including the BID of the sending turn. Switches can tell which switch they sent by listing their own unique BID, which Hello BPDU.

Information contained in Hello BPDU's:

Root Bridge ID: It is the bridge id of the root bridge. The switch/bridge which is sending this hello BPDU believe it to be root switch/bridge.

Sender's Bridge ID: It is the bridge id of the sender itself.

Sender's Root Cost: The STP cost between this switch/bridge and root switch/bridge.

Timer values on Root Switch/Bridge: Includes the Hello timer, Max-Age timer, and forward delay timer [5].

IV. Electing the Root Switch

Switch chooses a root switch in the BPDUs based on BIDs. The BID has the lowest metric value for the root switch as the Priority value begins with the two-part BID. Essentially the lowest-priority switch becomes the root. [6].

If one switch has the priority 4096 and the other switch having priority 8196 then the switch having priority 4096 will be elected as root switch. If the devices ' priorities are the same then the switch with the lowest MAC address is selected as the root switch. In the second case there will be no tie because all switches will have universal Mac address.The root election process begins with sending hello BPDU's to each other. In those BPDU's the switches themselves say that they are roots.

They list their BID as the root BID in their hello BPDU's. When any switch receives better BID than its BID in Hello BPDU then it changes root BID with that switch's BID. For example, if switch1 received Hello BPDU from switch2 which has better BID than itself, then switch1 changes its root BID with switch2's BID. In this way whenever any switch receives better BID than it, the switch stops advertising its BID and starts advertising the better BID as root BID[7].

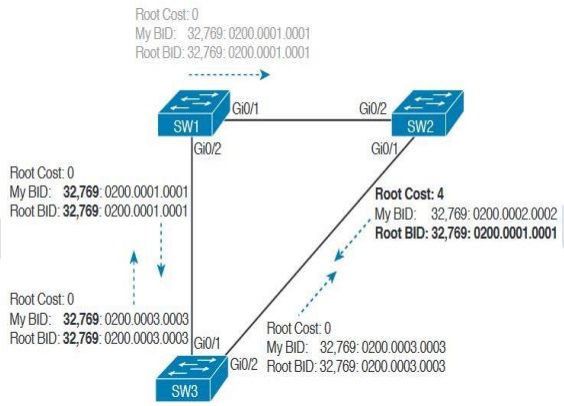

Process of electing a root switch

In the above case SW1 wins election because for SW1, SW2, and SW3 all these three switches have same BID. Hence they are tied. Now the mac-address of each device is checked. We can observe from the above scenario SW1 has the least mac-address. So, ultimately it will be elected as the root. After the election process, now only SW1 floods hello BPDU's and all other devices receives these BPDU's and forwards the frames. Since SW1 is root it floods the hello BPDU's all over the devices.

V. SELECTING EACH SWITCH'S ROOT PORT

The second process of the STP occurs when each non-root switch selects the one and only root port for RP. A switch is the mechanism through which the least STP cost of the root switch is achieved. [8]

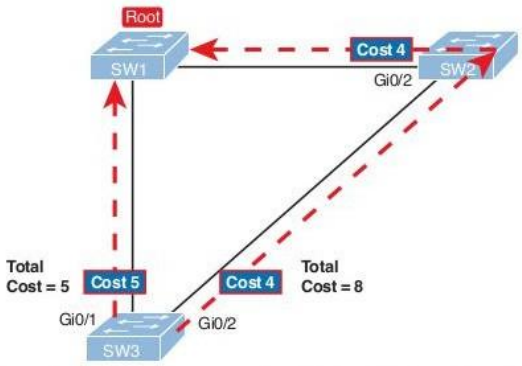

The switches send their local interface STP cost through Hello BPDU's. In the above figure we can observe that SW3 wants to send a packet to root switch. Here it has two options how to send that frame. It can send using either direct root from SW3 to Root or it can go through the SW2. So, here it has to calculate the least cost so that it can select its root port which should be in forwarding state. So, from figure the root switch's port cost is 1 and SW3's port cost is 4. So, now these two costs will be added. So, here for using SW3 to SW1 link the cost is 5. And coming to second link SW2's port

cost is 4 so it sends its port cost as 4. Now SW3's port cost also 4 so the total cost is 8. So, send frame through this link, the cost is 8.

VI. ELECTION OF DESIGNATED PORT

Port selection is made on the Network Segment Switch (which does not include a root port) with the lowest average spanning tree path cost to the Spanning Root Bridge, as is the Designated Port and the Non-Designated Port hand.

If there is a difference in cumulative path costs between the two switches in the network section, then pick the port as the Designated Port on the switch with the lowest Spanning Tree Switch ID, and the other side of the Designated Port as the Non-Designated Port. [9].

There are 5 stages for any port to converge again from blocking to forwarding

- Blocking
- Listening
- Learning
- Forwarding
- Disabled

If there is sudden topology change in the network while converging and the port is neither root port or designated port, then it simply goes into Blocking state. If the port is in the blocking state, no matter how many frames or updates it receive it will simply discard them.

After the blocking state the interface comes to listening state where it does not forward any frames as like that of blocking state. The switch simply washes out all the MAC table entries at this state. As these mac table entries may cause temporary loops.Now in the learning state even though it does not forward frame it learns mac addresses coming to that interfaces. Ultimately after learning all mac addresses the port comes into forwarding state [10].

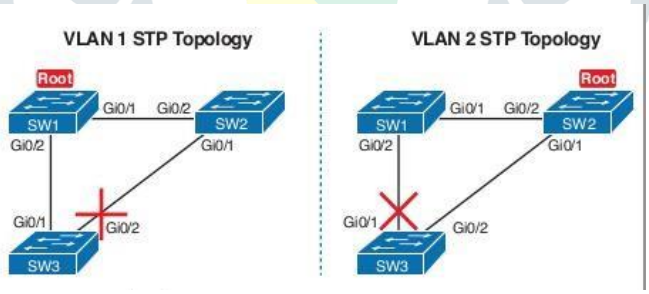

The drawback of the STP protocol is converging delay.TO prevent this 802.1D has published new protocol 802.1w which is named as Rapid STP(802.1w). Of course the working of Rapid-STP is similar to STP like electing root switch, designated ports etc., but what made it more preferable is its convergence time which is 10 seconds only. Unlike STP it adds two more ports like alternative port and back up ports.

Alternative port is simply nothing but back up for root switch. If root port gets failed or encounters any problem this alternative port becomes the root port of this switch. At the same time Back up port is used if any problem occurs in designated port.

Ether-Channel

One of the easiest ways to cut STP's convergence time is to prevent convergence entirely. Ether Channel provides a means to avoid the need for STP convergence when only one port or cable fails. Ether Channel combines multiple equal speed (up to eight) parallel segments between the same pair of switches, bundled into an Ether Channel. With respect to STP,

the switches view the Ether Channel as a single interface. Consequently, if one of the links fails but at least one of the links is up, then STP convergence will not be possible. [10].

Portfast

Through flipping listening and learning states, PortFast makes a move from blocking to immediate forwarding. Nevertheless, the only ports PortFast can safely need are ports where you know there are no connecting bridges, switches or other devices speaking STP. Otherwise, use the risks of PortFast in loop formation [11]. PortFast is ideally suited for end-user terminal connections. When ports connected to end-user computers are converted to PortFast, the transfer port can switch to STP forwarding status and forward traffic as soon as the PC NIC is allowed when an end-user PC boots. Without PortFast, Port must wait while the switch ensures the port is a DP and then wait until the device is in a state of temporary listening and learning. [12].

VII. IMPLENTING OF SPANNING TREE PROTOCOL

All switches allow Spanning Tree Protocol by default on all interfaces in each VLAN. PVSTP is nothing but improved version of STP. As the name suggests Per-VLAN STP there is different topology for every different VLAN. It also means that there is different root switch for different VLAN. All Cisco switches also by default uses PVST+.

The above picture explains the working of PVST+. Two different VLAN's and two different topologies with two different root switches. This is what the advantage of PVST+. Now, a days it is implemented by default in all switches.

We can make a switch as root port by configuring its priority or we can give command regarding primary and secondary. Primary refers to root port and secondary is if there is any problem to root switch then the secondary switch will replace it. We can give priority number ranging from 0 to 65,535. The default priority of the switches is 32769 for VLAN 1. The count increases with the increasing in the VLAN number.

Steps to configure the spanning tree:

PVSTP & Rapid-STP

1. Configuration mode by using command SW1#configure terminal
2. Now give the required command in global configuration mode

i) If we want to configure PVST SW1(config)# spanning-tree mode pvst

ii) If we want to configure Rapid-Pvst

SW1(config)# spanning-tree mode rapid-pvst

After configuring the command, the switches, themselves elect a root switch and also selects their root ports, designated ports etc. But, there is a problem, if the switch with older version becomes root switch may cause problems like slowing down in giving updates. To overcome this problem, we can set root switch with the following commands.

FIRST ONE

SW1#(config) spanning-tree vlan vlan-id root

{primary | secondary}

Note: In the above command if we provide

vlan-id the changes applicable to only that vlan.If we are not mentioning the vlan-id then it will applicable to all Vlans.

SECOND ONE

SW1#(config) spanning-tree vlan vlan-id priority priority-id

We can also configure the port costs in interface configuration mode.

Steps:

Go to interface configuration mode using command

SW1(config)#interface interface-id

SW1(config- if) # spanning-tree vlan vlan-id cost cost

CONCLUSION

Spanning Tree Protocol is very helpful in enterprise network as it solves problems like looping, which results in down fall of network and increasing time span of transactions in different VLAN. It reduces burden on network engineers as its automatically remove loops.

REFERENCES

[1] Rahman, Shahriar I., and Norman W. Finn. "Spanning tree protocol for wireless networks." U.S. Patent No. 7,653,011. 26 Jan. 2010.

[2] Perlman R., An Algorithm for Distributed Computation of a Spanning Tree in an ExtendedLAN, Ninth ACM Data Communications Symposium, v. 20, n. 7, pp. 44–52, 1985

[3] http://www.cs.fsu.edu/~curci/itl/labs/spantree/spantree.htm

[4] CCNA Routing and Switching By William Stallings

[5] https://www.cisco.com/c/en/us/support/docs/lan-switching/spanning-tree-protocol/24062-146. html

[6]Fine, Michael, Silvano Gai, and Keith McCloghrie. "Shared spanning tree protocol." U.S. Patent No. 6,188,694. 13 Feb. 2001.

[7] https://www.cisco.com/c/en/us/support/docs/l an-switching/spanning-tree-protocol/5234- 5.html

[8] William Stallings, Spanning Tree Protocol,CCNA Routing and Switching ICND 2

[9] http://www.omnisecu.com/cisco-certified-net work-associate-ccna/how-spanning-tree- protocol-stp-select-designated-port.php

[10] Braem, Bart, et al. "The wireless autonomous spanning tree protocol for multihop wireless body area networks." *2006 Third Annual International Conference on Mobile and Ubiquitous Systems: Networking & Services*. IEEE, 2006.

[11] Swan, Michael Jon. "Using spanning tree protocol (STP) to enhance layer-2 network topology maps." U.S. Patent No. 8,045,488. 25 Oct. 2011. [12] William Stallings, Spanning tree protocol, CCNA Routing and Routing