Heat flux variation in hypersonic vehicles with different shock controlling devices- A review

Balaji R*[1], Muruga Lal Jeyan[2]

School of Mechanical Engineering,

Lovely Professional University, Phagwara, Punjab, India.

Abstract:

Hypersonic vehicles while reentry phase experience a large amount of heat flux over the leading-edge cone. The leading-edge cone geometry decides the heat flux and aerodynamic drag value. To achieve more efficiency the structural change is major tool. In this paper different leading-edge cone of the bluff body discussed. Based on the literature three different structural design taken and the study were done. First spike design with different angle of attack in hypersonic level discussed. Cavity method for producing recirculated gases discussed following the spike method. The efficient method is with less heat flux and high drag is discussed in the conclusion.

Introduction:

Heat flux generation over the hypersonic vehicle causes due to shock wave generation over the blunt or bluff body. While the vehicles moving at high velocity all kinetic energy converted into pressure energy. Due to the high stagnant air inside the shear layer over the bluff body friction value increases and it produces high heat flux value. The shear layer in the flow field need to be concentrated frequently in order to figure out the heat flux value. If the shear layer various continuously there is a possibility of high fluctuation in the flow field and that alters the heat flux value. In order to reduce the heat generation over the leading edge of the bluff bodies thermal production system and ablative cooling method were introduced in the earlier stages of the research. In the upcoming days they are three shockwave reducing agent were introduced, there are Structural, fluid and energetic devices. In that above-mentioned method structural indicates the changes in the bluff bodies structures for changing the position of the shockwave by introducing spikes or drum in the leading-edge surface of the bluff bodies. They are changing the position of reattached shockwave. The other methods are changing the fluid flow and altering the energy over the bluff bodies by adding liquid agent. In this paper we are going to see the different method adopted for structure to reduce the intensity of the shockwave and the research gap stated clearly in this paper.

Literature Review:

Large spike angle blunt body designed. Large spike angle will reduce the heat flux value and large blunt body angle will increase the heat over the blunt body. The spike advantage is converting the oblique shock wave into the week bow shock wave

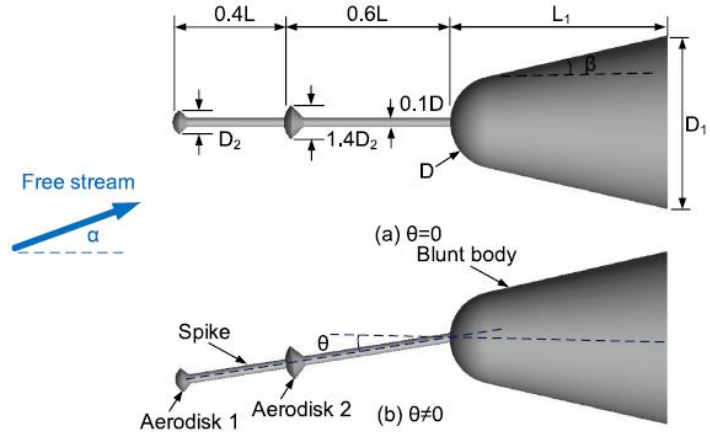

Figure 1. Geometric models.[1]

The intensity of the shock wave increases in windward side comparing to the leeward side of the blunt body. So, the windward side of the blunt body need to taken care more due to high heat fluctuation.

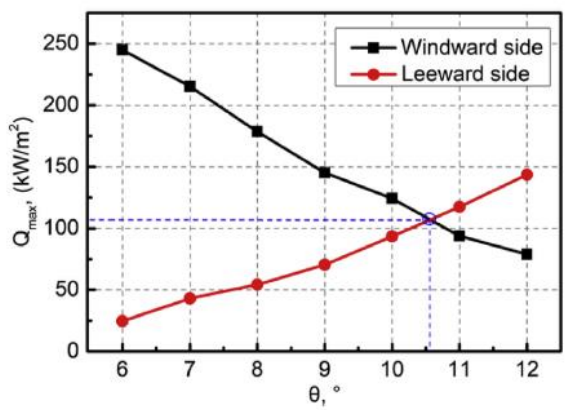

Figure 2. Effect of installation angle on maximum heat fluxes of windward and leeward sides.[1]

The spike angle 1.5^{o} always need to be greater than the blunt body angle in order to minimize the heat flux value.

Leading Edge cavity in blunt body:

In order to reduce the bow shockwave fluctuations over the blunt body cavity was introduced in the front stagnation point of the flow. The cavity in the leading-edge part will decrease the intensity and fluctuation of the bow shockwave over the bluff body.

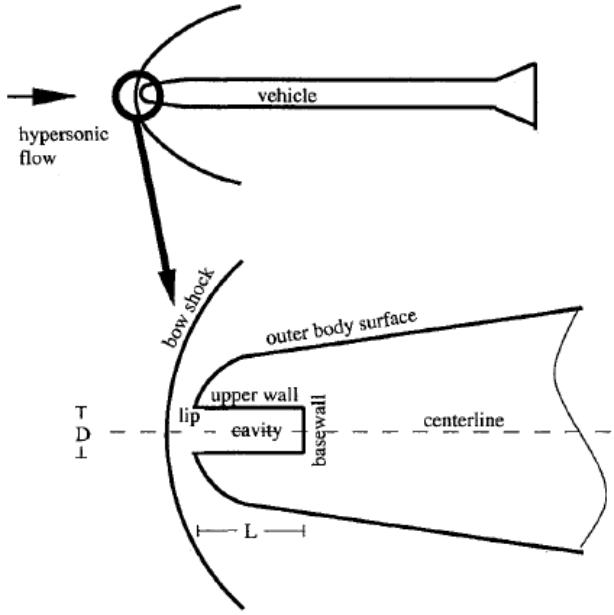

Figure 3. Schematic of axial cavity in the nose region of a hypersonic Vehicle [2].

Drag value remain same but the heat flux generation varies comparatively. This pressure oscillation technique produces better result by recirculating the airflow. Fineness ration of the cavity design is very low and less in weight comparing to the spike blunt body design.

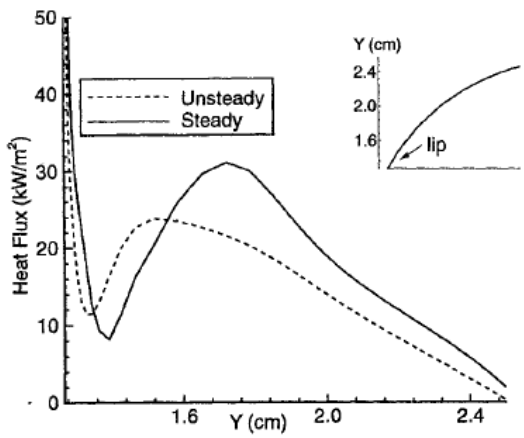

Figure 4. Outer surface heat flux distributions [2]

Electrodynamic heat shield:

The alternate solution for thermal production system figured out to reduce the heat flux and increase the aerodynamic drag over the blunt body. Magnetic force external generated to enhance the shear and entropy layer over the blunt body. Due to the interaction between flow and magnetic field the intensity of the bow shockwave reduces that increases the boundary layer of the flow and decrease the velocity which cause friction in the flow field which tends to increase heat flux in the stagnant portion.

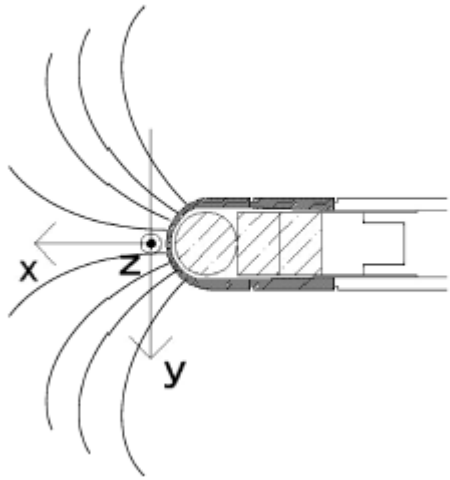

Figure 5. Test model of spherically blunted body model.

Initiation of the Lorentz force enhance the shockwave over the blunt body. The validation with and without magnetic field clearly indicating intensity variation and aerodynamic heating property over the bluff body. The magnetic flux alters the absorption and emission rate in the molecules over the bluff body. The change in the flow properties produces discontinuity in the flow and alters the drag vale multiple times.

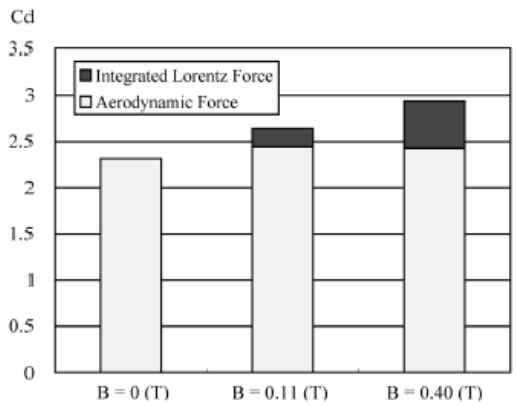

Figure 6. Measured values for total drag coefficient and its aerodynamic and Lorentz force components

Conclusion:

Various shock controlling methods were discussed in the literature. But the combination of spike with cavity and without cavity is not stated proper. Merging the two techniques and making a fluid shock controlling devices will enhance the boundary layer of the flow and makes the shock wave weaker while it reaches the leading-edge part of the bluff body, And the Lorentz force also a better way to reduce the shockwave strength. Further more research need to carried out to reduce the intensity of the shockwave and alter the flow property.

References:

1. W. A. Engblom, D. B. Goldstein (1996), “Nose-Tip Surface Heat Reduction Mechanism”, in Journal of Thermophysics And Heat Transfer.
2. Masaaki Kawamura, Hirotaka Otsu, Detlev Konigorski, Shunichi Sato, Takashi Abe (2009), “Experiment on Drag Enhancement for a Blunt Body with Electrodynamic Heat Shield”, in Journal of Spacecraft and Rockets.