DESIGN AND FABRICATION OF STAIR CLIMBING TROLLEY

B.RAVINDAR, M.KIRAN KUMAR, K.RAJASHEKAR, G.RAJKUMAR

Mechanical Engineering Department, Vaageswari College of Engineering, Karimnagar, Telangana, India
Email: bhanothuravindar@gmail.com, kiranmech302@gmail.com,

ABSTRACT:

Trolley is generally use for the carrying heavy weights with the help of less human effort. The manufacturing of the trolley deals with proper design, accurate fabrication and prescribed analysis using finite element software gives better motion which resist to high load by applying less effort this paper deals with manufacturing of such stair climbing trolley with simple mechanism(i.e. ratchet mechanism) initially the model is sketched using solid works and imported into ANSYS software for structural analysis used to find von-mises stresses under load which deals to fabricate trolley with better performance under heavy duty with less effort.

1.0 INTRODUCTION:

It requires much effort, time to lift a heavy weight component and to transport them to different locations. This type of problems raises in industrial sector, factory, manufacturing units and production sector where heavy mechanical components are to be transported from one place to another place and also from one floor to another floor using simple mechanism in involved in such operation it becomes very much difficult to move heavy components to different locations. This stair climbing trolley is one of the simplest operating vehicles which require less human effort without any external electrical power input to operate the trolley and move on the ground even though the path is uneven. The wheel mechanism adjusts itself to stair to climb different floors by vehicle and also on rough ground. Even though main researchers investigated on fabrication and design of stair climbing trolley less effort where implemented to perform analysis on cabin structure and wheel alignment. In this paper the efforts are insisted to carry analysis on entire trolley structure is including wheels and fabricated with optimal measurements with suitable materials.

1.1 MAIN OBJECTIVE OF INVESTIGATION:

The main objective of this project is to perform the following analytical experimental investigation drawn in following point below:

- To design all parts of trolley i.e. frames, wheels, bearing, and assembling them with modeling software PROE software according to specific dimensions.
- Structural analysis on entire trolley with ANSYS workbench software which delivers suitable results based on parameters such as deformation, von-mises stresses, load applied, on component such as wheels, frames, platform cabin etc.
- Fabrication of trolley based on above analysis with accurate measurements to withstand maximum load.

2.0 LITERATURE REVIEW:

Many researchers performed various experimental investigations on stair climbing vehicles such as trolley, trucks, chair for handicapped person, forks etc. it requires an in depth study of maximum load acceptable for a cabin and how stress transferred to wheels alignment.

Pratik H. Rathod et al. [1] designed and fabricated a hand truck which climb stair with less effort which is useful for library, hospital, regular goods carrier etc. the main modification in this truck where made at wheels using plat surface roller plat attached instead of traditional wheel frame. The mechanism based on retched arrangement mechanism. The maximum bending moment was calculated. The inclination of 44 degrees plays a major role which covers more than 90% of all stairways within this limit. There is an optional maximum inclination warning alarm that alerts the operator of an inclination of more than 44 degrees. When truck operated with exceeding the limit there should be taken the necessary safety precautions.

Md. A. Hussain et al. [2] designed and manufactured a stair climbing vehicle using modified form of frame arrangement i.e a curved wheel frame which move on rough surface. To address several technical issues in designing this vehicle is stability and maintain high speed at vehicle wheel arrangement while climbing stairs. The frame arrangement consists of sun, planetary, idler wheel which are assembled to the shaft which reduces application of load. However, the steepness of the stairs is also the important concern of this study. The vehicle has four set of wheels arrangement to support its weight when it moves over the flat terrain. Each wheel frame consists of three sub-wheels attached with the sun wheel through three idler gears.

Ashish Singh et al. [3] worked on four-wheeled robot will have the capability of climbing the stairs of height equal to its diameter. It will possess maximum gripping capacity and stability during motion in rough terrain owing to the 4 differential driven wheel configurations. The main

goal of this investigation involved within this project such as the robot should be upgradeable with a variety of application sensors, e.g. cameras, thermal vision, or chemical sensors. To be usable in any search and rescue or security application, the robot has to be operational without changing batteries for at least two hours.

Raj Kishor Kumar et al. [4] investigated on stair climbing functionality is embedded in the design through its structure and mechanism. The product mainly consists of modules viz. seat, links and frame. Anthropometric measures are considered in the dimensioning of seat. Focus is laid on different parameters such as form, functionality, technology and architecture of the product. The design is validated by developing Digital Mockups of individual parts are generated in PRO-E Creo software and are assembled to form the final product. Necessary simulations of the product are generated in virtual environment of PRO-E Creo software. The physical and focused prototype indicating the structure and functionality is developed using thermocol material. Here wheel carriers are made in RP (Fused Deposition Modelling) using ABS (Acrylo Butadiene Styrene) material. Wheelchair is embedded with some additional features like integrated commode facility, after gathering costumer requirements from different subjects.

P. Jey Praveen Raj et al. [5] designed device such as hand trolley used to relieve the stresses of lifting while on flat ground. However these devices usually fail when it comes to carrying the load over short fleet to carry heavy objects up the stairs with less effort compared to carrying them manually .The main objective of the project is to find an efficient and user friendly method of carrying various objects through stairs using minimum effort from the user and to also provide a smooth movement while climbing the stair. Under this project we have manufactured a stair climber with tri lobed wheel frames at both sides of the climber and three wheels on each sides are used in the tri lobed frame. The wheel assembly is rotated by a gear- motor mechanism where a DC gear motor is used to provide the necessary power for rotation and a pinion-gear mesh is used for reducing the rotating speed of the wheel. The motor is connected to a lead acid battery of similar ratings and they are in turn connected to DPDT switch.

Roshan Alaspure et al. [6] designed AND fabricated a Stair Climbing Wheel Mechanism which can be considered as Alternate for lifting goods in such a way that it can be climb a stepped path with its modified wheel structure using manual metal arc welding (MMAW) or stick Welding. An electric current is used to strike an arc between the base material and consumable electrode rod or stick. The electrode rod is made of a material that is compatible with the base material being welded and is covered with a flux that gives off vapors that serve as a shielding gas and provide a layer of slag, both of which protect the weld area from atmospheric contamination.

P. P. Gondole et al. [7] fabricated a stair climbing hand trolley with proper dimensions of Height 4 feet, Lower frame 38 X 38 cm, Length of each arm of trigonal wheel axial geometry 15 cm, Diameter of shaft 15 mm. The major components used to fabrication process are square bar cast iron pipe, Round bar shaft of SAE 1030, rubber rest, caster wheels (industrial rubber), iron plate, long guzzon pin. Mathematical calculations are made to this work to exhibits expected results and carried load across the stair very easily thus climbing across stairs transportation of goods very easily.

3.0 PROBLEM STATEMENT:

The trolley consist of square frame or bar of cabin height and width of 611.10mm, X 66.04mm, length is considered as 91.44mm and wheel diameter is take as 222mm with less effort i.e below 100N. But, analysis is to be carried when maximum load of 9800N weight applied on trolley. Fabrication must be consist of simple mechanism i.e ratchet to climb each staring of steps with height 200mm and also perform structural analysis to find out stress and displacement on all components of trolley.

3.1 METHODOLOGY

The mild steel frame with square cross section are welded to form as a trolley using wheel additional setup three in number forming an equilateral shape on both ends of the trolley. The fabrication is made using design and modeling sketched in SOLIDWORKS software. Analysis is done on the trolley to find Von-mises stresses and deformation to find out the failure criteria on entire trolley setup. The number of nodes and elements formed by meshing component gives the fine analysis requirement.

The step by step procedure made for design and analysis of stair climbing trolley is manufactured by following procedure is represented below:

- Identify the Specifications of parts assembled to form a trolley.
- Make sure about cost estimation for trolley components.
- Planning and designing for fabrication procedure to be performed.
- Sketch the trolley in draft and model software and analysis of entire working model.

Table 1: Specifications of parts assembled to form a trolley

SL.NO	COMPONENT	QUANTITY	SPECIFICATION
1	Ball Bearing	4	Bearing No.6205ZZ
2	Shaft	1	Diameter 25mm
3	Axial Rod	1	66.04 mm
4	Bush	2	Outer Diameter of 65mm, Inner Diameter is 25mm
5	M S Sheet	4	3mm Thickness
6	Angular Shafts	6	1x35mm
7	Mosh Sheet	1	91.44x66.04mm
8	Square Rod	2	66.04 mm
9	Axial Shaft	1	66.04 mm
10	Wheels	6	Outer Diameter is 222mm,
11	Rear Wheels	2	64.46mm
12	Washers	12	25mm

3.3 FLOW CHART FOR FABRITATION

The flow chart includes the sequence of the planning, production, inspection, investigation of failure of the trolley which includes time saving, no wastage of material, man power.

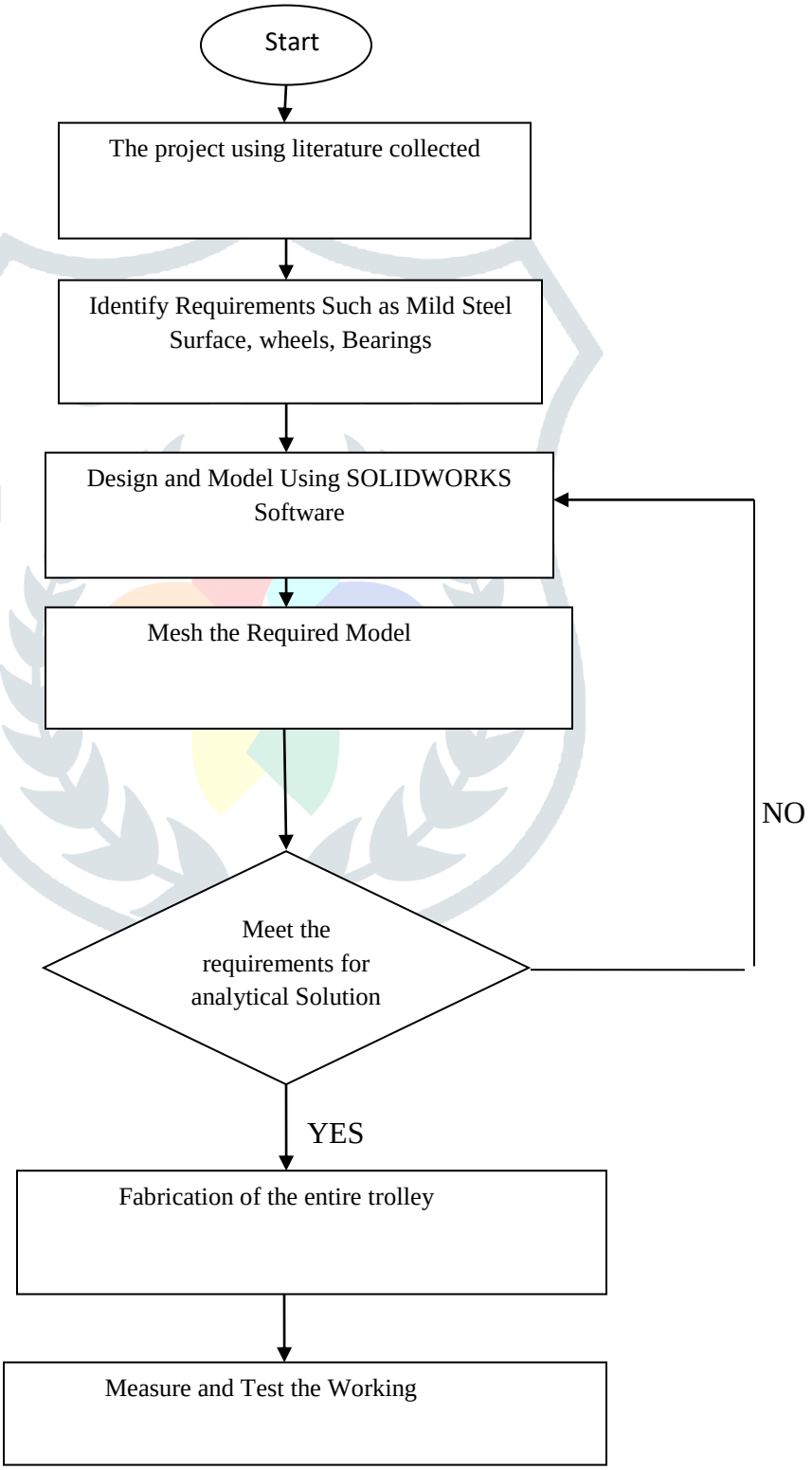

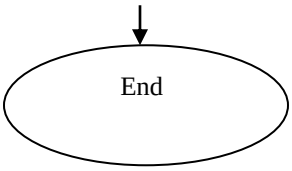

Table 2: Cost estimation for trolley components

SL.NO	COMPONENT	QUANTITY	COST
1	Ball Bearing	4	4x 300 =1200
2	Axial Rod	1	1x500=500
3	Red oxide and color	1	1x500=500
4	Bush	2	2x650=1300
5	M S Sheet	4	4x300=1200
6	Angular Shafts	6	1x500=500
7	Mesh Sheet	1	1x450=450
8	Square Rod	2	2x300=600
9	Angular rod	1	1x700=700
10	Wheels	6	6x800= 4800
11	Rear Wheels	2	2x350=700
12	Washers	12	12x10=120
	Round pipe	1	1x300=300
Total rupees			12,870

3.2 FABRICATION:

The fabrication starts with welding of all the frames to build into perfect structure using welding, nut-bolt fracture to convert the structure into perfect link under motion. The wheels are attached in using triangular plate on both sides of wheels alignment. The frame is brought into appropriate using gas cut. The plate 2mm thickness the bushes inserted in between wheel alignment and lower distribution shaft are made using grinding process .The bushes ,triangular plates used for wheel alignment arte grinded for smooth surface finish.

Table 3: Fabrication process for trolley components

S.NO	COMPONENT	FABRICATION PROCESS
1	Square frame	Welding
2	L-frame	Welding
3	Circular bar	Grinding
4	Bushes	Grinding ,Drilling
5	Bearings	Standard
6	Triangular plate	Gas cut, grinding
7	M.S. Sheet	Welding & Nut-Bolt

9	Washers	Turning in lathe Machine
10	Axial rod	Standard

4.0 WORKING PROCEDURE:

As the trolley model designed in solid works and analysis procedure completed in ANSYS and the fabrication is made using accurate measurements .The trolley can be used for carrying heavy weights mechanical components to one place to another horizontally and also multi stair steps. Step by step procedure is described in following diagrammatical representation which consists of fabrication and analysis of Stair, wheel, trolley. The fabrication and assembly play a major role in this construction procedure given below.

(a) (b)

Fig 1: Individual parts of the experimental set up to be joined. (A) wheels with tri-plate (B) Angular, square frame, pipe.

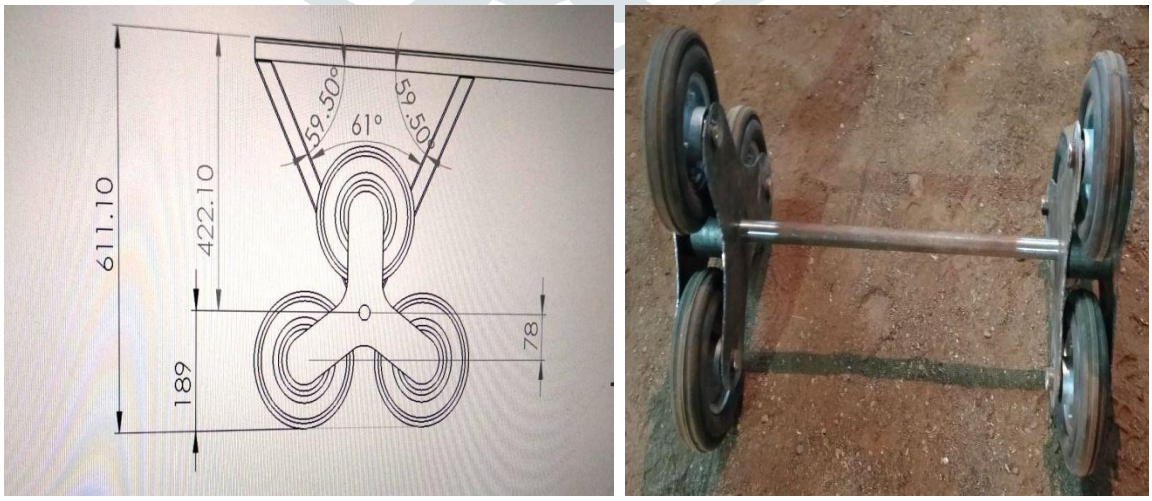

Fig 2: Design and fabrication of wheels attachment with axial rod, bushes, bearings.

4.1 FINITE ELEMENT ANALYSIS:

Finite element analysis of a stair climbing trolley is performed using ANSYS software. The deformation, von-mises stresses at maximum and minimum values are determined for each and every part of the component. Which are represented in figure below using ANSYS workbench modul.

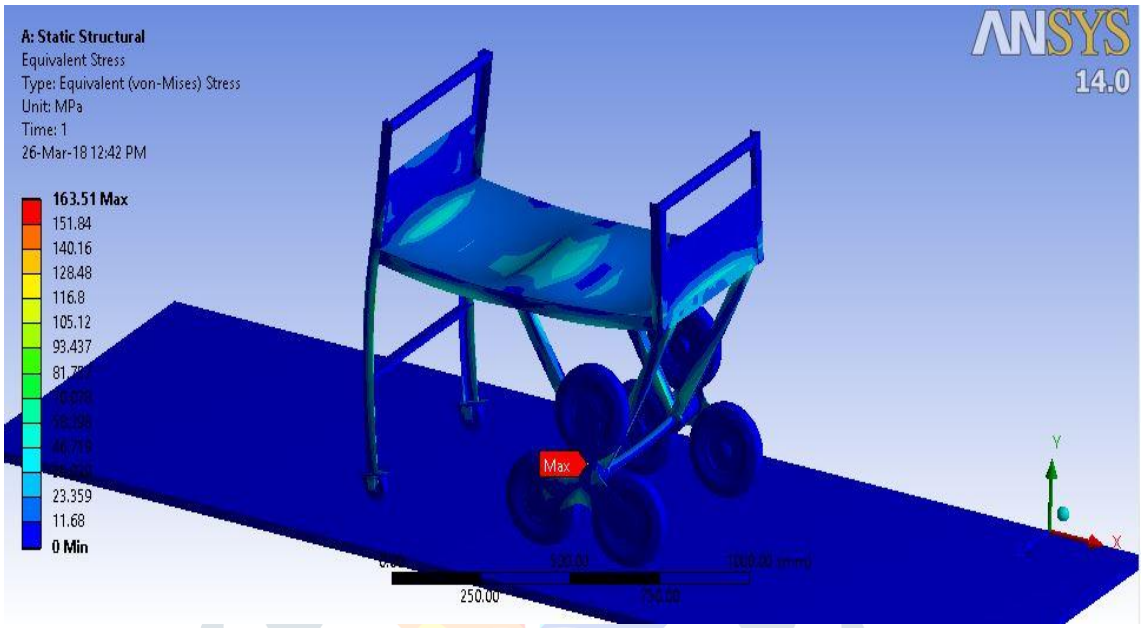

FIG 3: Vonmises stresses for the trolley under load 9800N at platform

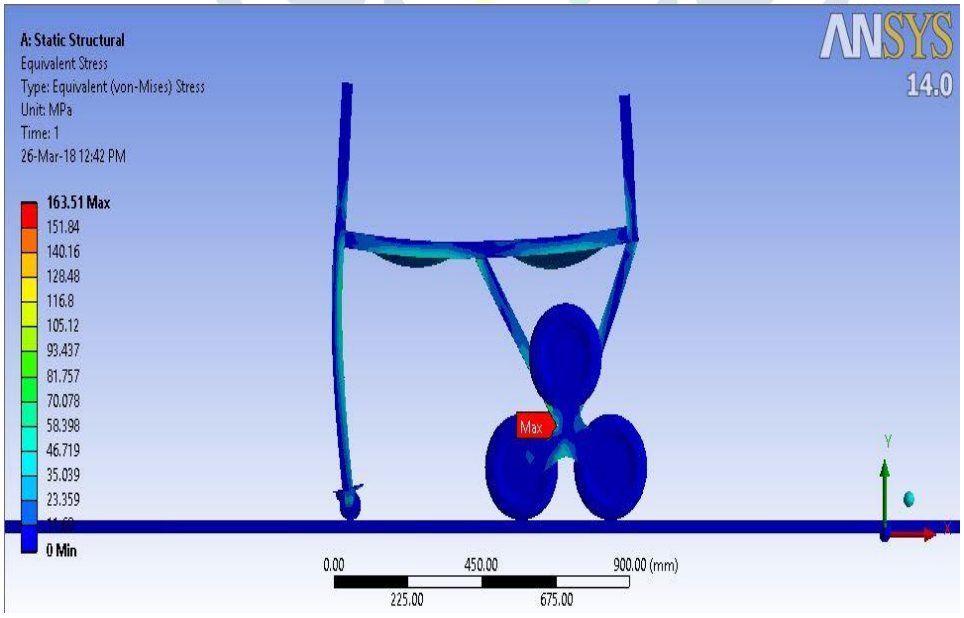

FIG 4: Side view of von-mises stresses for the trolley under load 9800N at platform

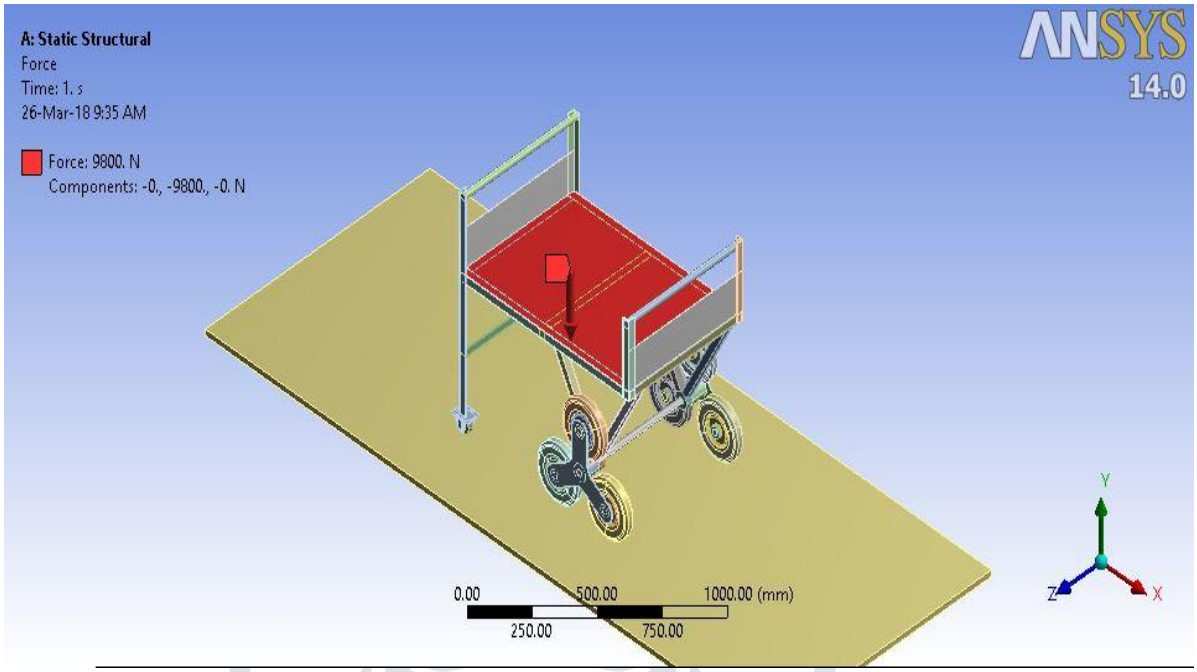

FIG 5: Application of 9800N load at platform for the trolley under

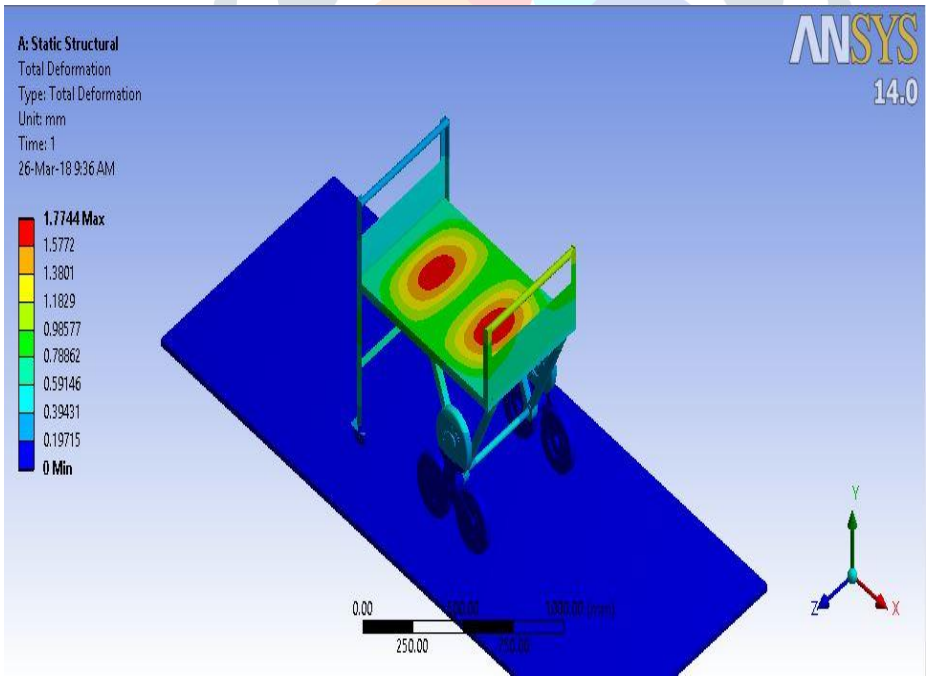

FIG 6: Total deformation due to of 9800n load at platform for the trolley

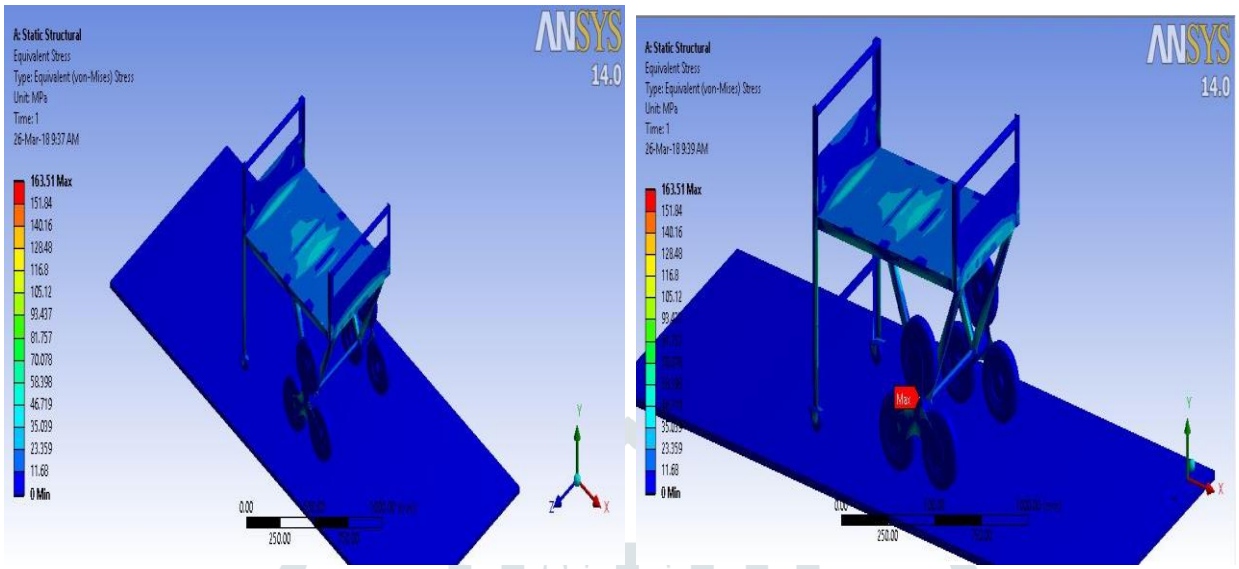

FIG (a) **FIG (b)**

FIG 7: Equivalent stress distribution for the trolley for fig (a) and (b)

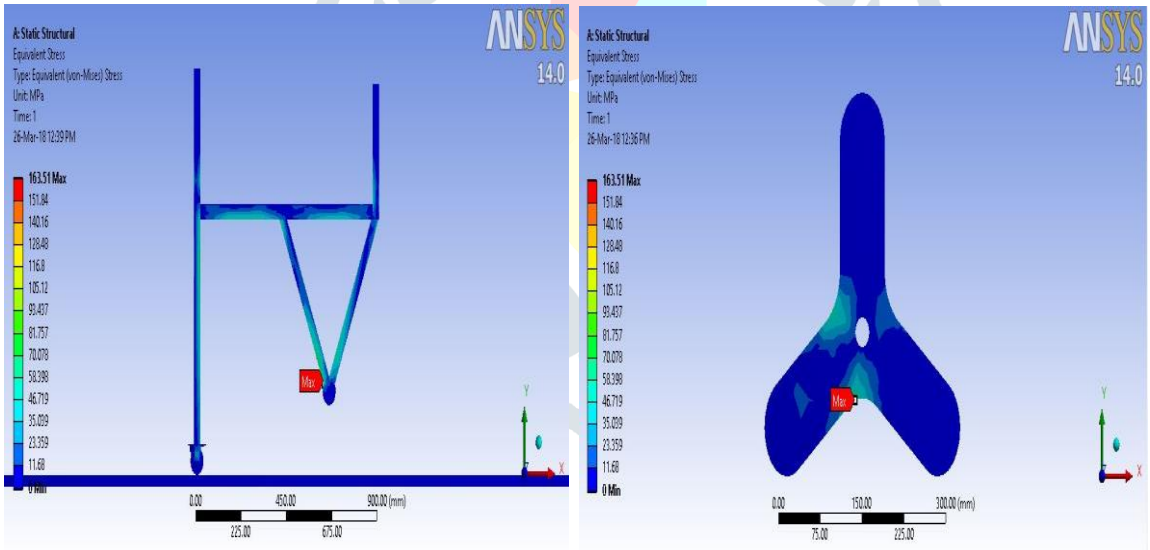

Fig (a) **fig (b)**

FIG 7: Equivalent stress distribution for the trolley for (a) structure (b) wheel plate assembly

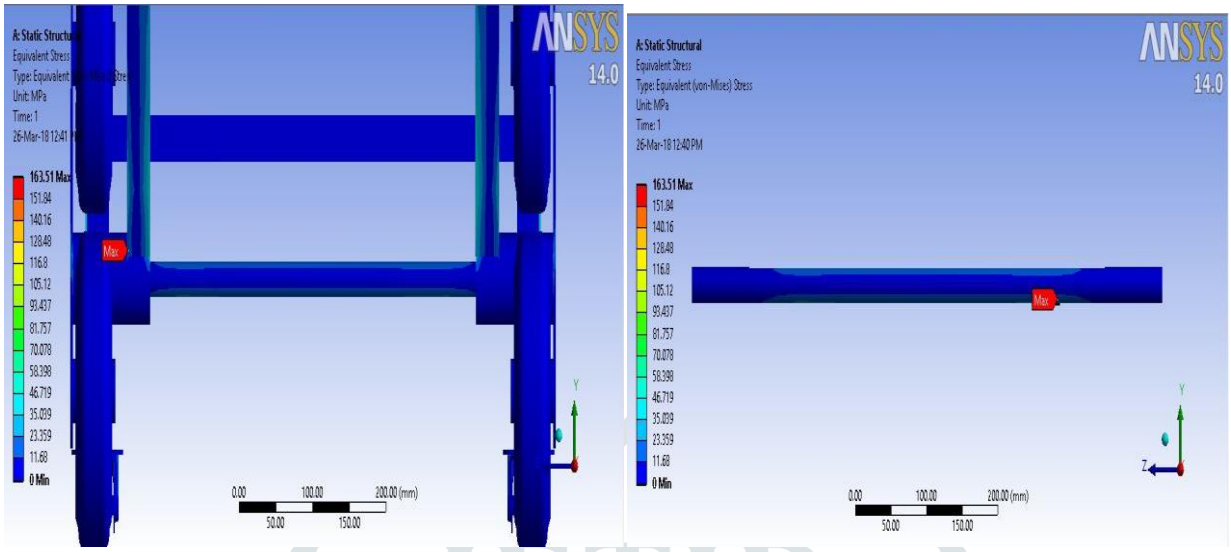

Fig (a) **fig (b)**

FIG 8: Equivalent stress distribution for the trolley for (a) wheels including bearing, bushes assembly (b) axial rod structure.

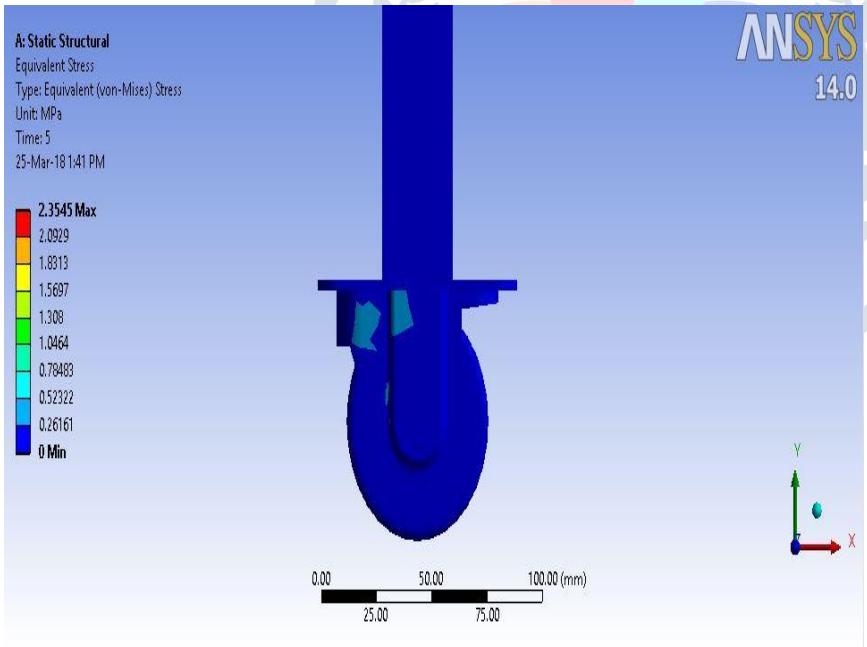

Fig 9: Static structural Analysis of Equivalent (Von-mises) stress of 2.3545Mpa

5.0 CONCLUSION:

The above work on fabrication design and analysis of stair climbing trolley is based on modeling made by solid works with accurate values and imported into ANSYS workbench for structural analysis and proper mesh. After performing the analysis design brought into practical working model successfully. The wheel attachment as proper gap with each other and there is no slip, 2sudden shock, wear and tear on other platform. The mechanism of transmission can carry heavy loads with less effort. The tri stair plate can weight itself to climb any height of stair with little tolerance using nut-bolt and adjustment mechanism with in less time more luggage can be moved to different locations with easy transportation.

Acknowledgment:

We are very grateful to Ch. venkatramana lab technician workshop for their suggestions and Support For This Project To Bring Into Practical Condition.

REFERENCE :

1. Mr. Pratik H. Rathod , Mr. Ravi R. Mishra , Mr. Nitin A. Waghamare ,design and fabrication of stair climbing hand truck, international Journal of Emerging Trends in Engineering and Development, Issue 3, Vol.5, September, 2013.
2. Md. A.H ussain. Nafis A. Chowdhury, Rubaiat I. Linda, and Shamiuzzaman Akhtar, Design and Manufacturing of a Stair Climbing Vehicle Proceedings of the 2010 International Conference on Industrial Engineering and Operations Management,Dhaka, Bangladesh, January 9 – 10, 2010.
3. Ashish Singh, A Thesis On Design, Analysis And Fabrication Of A Reconfigurable Stair Climbing Robot, Institute Of Technology Rourkela, India, May 2015.
4. Raj Kishor Kumar, Shahbaz Ahmad, Shahid Khan, Shankul Behari, Shubham Rai, A Project Report On Automated Stair Climbing Wheelchair.
5. P.Jey Praveen Raj, P.M.Mohamed Fuge, R.Paul Caleb, G.Natarajan, Design and Fabrication of Stair Climbing Trolley, internaltional journal of advancement in engineering technology,Management &Applied science , Volume 3,Issue 5 May 2016 ISSN No;2349-3224.
6. Roshan Alaspure, Chaitali Barmase, Snehal Chambhare, Manish Mandhre, Prof. Yogesh G. Joshi (Guide), Fabrication of Stair Climbing Wheel Mechanism: Alternate for lifting goods,International Research Journal of Engineering and Technology (IRJET) e-ISSN: 2395 -0056 Volume: 03 Issue: 05 | May-2016 www.irjet.net p-ISSN: 2395-0072
7. Prajan Pradip Gondole, Kamlesh Diliprao Thakre, Himanshu Anil Moon, Shubham yengalwar, Mr. S S Marathe ,Stair Climbing Hand Trolley,Journal of Emerging Technologies and Innovative Research (JETIR) www.jetir.org April 2016, Volume 3, Issue 4, JETIR, ISSN-2349-5162.
8. www.ansysmanual.com
9. R.S.Khurmi, J.K.Guptha, A text book of Machine design, S.Chand publishing house (P) Ltd.
10. Dr.R.K.Bansal, A text book of Strength of materials, Laxmi Publications(P) Ltd.

11. Kubota, T., Kuroda, Y., Kunii, Y., Natakani, I., 1999, "Micro Planetary Rover 'Micro5", Proceedings of Fifth International Symposium on Artificial Intelligence, Robotics and Automation in Space (ESA SP-440),, Noordwijk, 373-378.
12. Kemurdjian, L., Gromov, V., Mishkinyuk, V., Kucherenko, V., Sologub, P., 1992, "Small Marsokhod Configuration," International Conference on Robotics & Automation, Nice.
13. Leppänen, S. Salmi, Halme, A., 1998, "WorkPartner HUT Automation's new hybrid walking machine", CLAWAR'98 First international symposium, Brussels.
14. H. F. M. Van der Loos, S. J. Michalowski and L. J. Leifer, Development of an omni-directional mobile vocational assistant robot, In Proceedings of the 3rd International Conference of the Association of Advanced Rehabilitation Technology, Montreal, P. Q., Canada, June 1988.