Receivers for Linearly Concentrating Collectors

Ravindra Jilte

School of Mechanical Engineering, Lovely Professional University, Punjab

Abstract

Solar energy in particular has been receiving increasing attention due to the substantial solar insolation levels in India all year round. This makes India an ideal destination for LFR development and deployment as an exemplary solar technology. Among various solar thermal technologies present such as dish concentrating, parabolic trough technologies, Compact Linear Fresnel Reflector (CLFR) proves to be efficient and simple method to exploit solar energy. Therefore, the present work is undertaken to study the receivers of CLFR receiver.

keywords: solar energy, solar thermal, linear fresnel reflector, receiver

1. Introduction of Linear Fresnel reflectors

Linear Fresnel reflector (LFR), as shown in Figure 1, a downward facing receiver gets a linear focus from array of mirrors mounted on ground. Single axis independent movement of curved or straight mirrors is an advantage. For thermal systems serves two purposes a) avoids rotational joints b) reduced convective losses (single downward facing receiver configuration).

The advantages associated:

- Its simple design with almost flat mirrors
- Less supporting structure

outweighs the cons of lower overall thermal and optical efficiency . Compact Linear Fresnel Reflectors (CLFRs) exploit multiple receivers (increasing thermal efficiency) for each set of mirrors (increasing optical efficiency). In this way adjacent mirrors can have different inclinations for different receivers allowing for higher packing density of mirrors. This in turn increases optical efficiency and thereby minimizing land use.

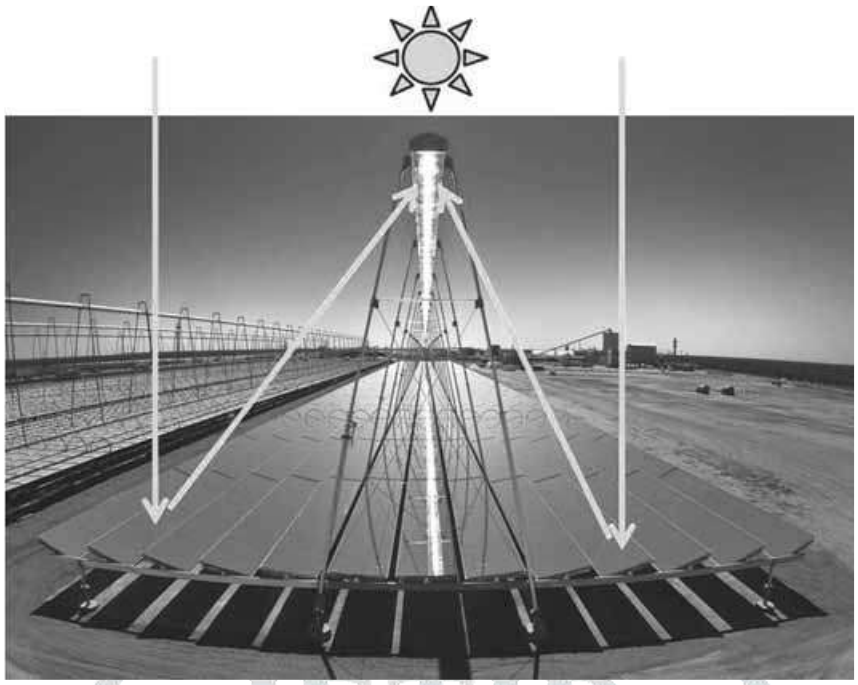

Figure 1 Central receiver tower plant Gemasolar plant [1].

2. Vacuum tube receivers for parabolic trough power stations

Linear Fresnel unit's receiver with absorber tubes are shown in Figure 2. Vacuum tube receivers [2]. The absorber tube is borosilicate and coating is stable for 400°C operation [3], [4].

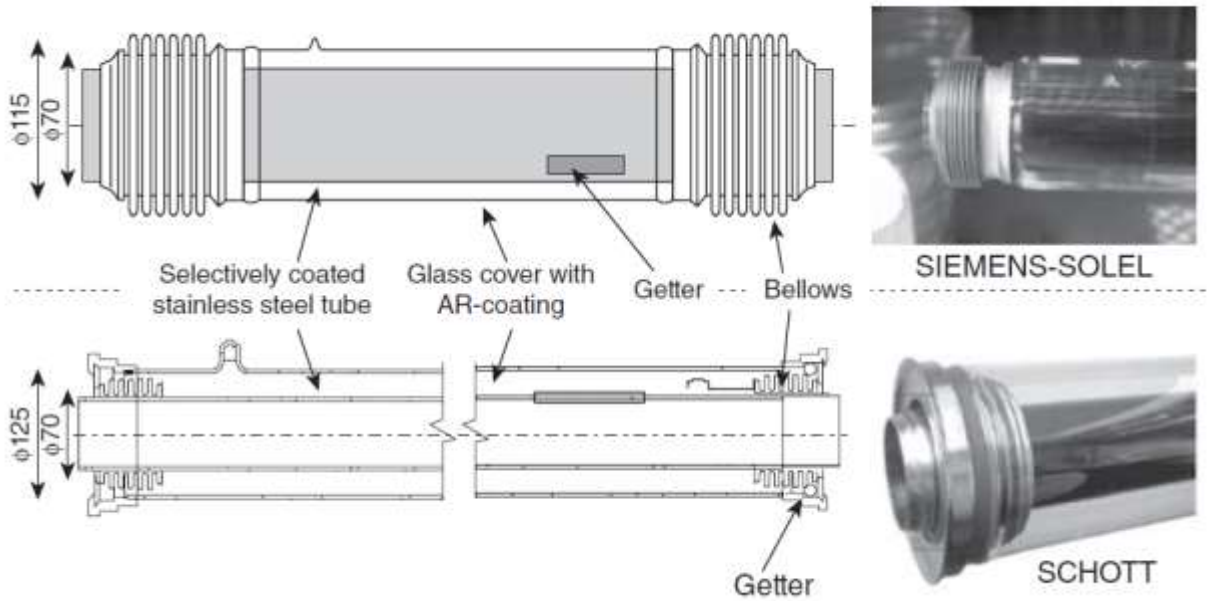

Figure 2. Vacuum tube receivers [2].

The tube is provided with Al2O3 diffusion barrier. The Mo/Al2O3-cermet, Mo-IR-mirror and the SiO2 AR layer is deposited on the tube [5], [6].

ENEA developed a DC (direct current) sputtered absorber system. It consists of a 500 nm thick Wor ZrN-IR-mirror. A cermet of ZrNx, TiNx or HfNx in AlN. The AR layer is made from AlN or Al2O3. The coating is stable for 580°C in vacuum[7], [8].

3 Air stable receivers

It used stainless steel tubes. Other materials Cr, Mo, Ni, and Ta has been investigated as IR-mirrors Figure 3. One problem for these materials is fast oxidation in air. In case of Silver (Ag), the main degradation mechanism is Ag2S formation on reacting with H2S in air. However, polished stainless steel, a CrOx cermet with a SiOx-AR layer was stable at 500°C [8].

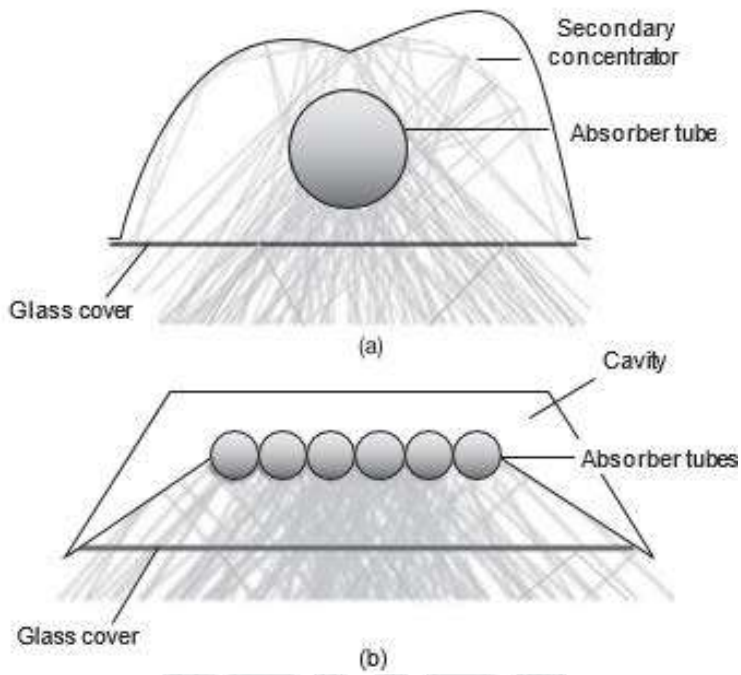

Figure 3. Receiver (a) single tube (b) multi-tube [3].

Conclusion

Among various solar thermal technologies present such as dish concentrating, parabolic trough technologies, Compact Linear Fresnel Reflector (CLFR) proves to be efficient and simple method to exploit solar energy. The receiver of linear fresnel reflector plays crucial role in solar thermal power generation. Two types of receivers have shown promising results for its use in linear fresnel reflector.

References

[1] J. Burgaleta, S. Arias, and D. Ramirez, "Gemasolar, the first tower thermosolar commercial plant with molten salt storage," in *SolarPA-CES 2012 International Conference, Marrakech, Morocco, Sept*, 2012, pp. 11–14.

[2] D. R. Mills, A. Monger, and G. L. Morrison, "Comparison of fixed asymmetrical and symmetrical reflectors for evacuated tube solar receivers," *Sol. Energy*, vol. 53, no. 1, pp. 91–104, 1994.

[3] W. M. Conlon, P. M. Tanner, M. Venetos, and R. J. Hanson, "Systems and methods for producing steam using solar radiation." Google Patents, 14-May-2010.

[4] C. Sella, A. Bichri, J. C. Martin, J. Lafait, K. Driss-Khodja, and S. Berthier, "Adjustable optical properties of coatings based on cermet thin films near the percolation threshold," *Phys. A Stat. Mech. its Appl.*, vol. 157, no. 1, pp. 555–560, 1989.

[5] T. E. Graedel, "Corrosion mechanisms for silver exposed to the atmosphere," *J. Electrochem. Soc.*, vol. 139, no. 7, pp. 1963–1970, 1992.

[6] Q. Zhang and D. R. Mills, "Very low-emittance solar selective surfaces using new film structures," *J. Appl. Phys.*, vol. 72, no. 7, pp. 3013–3021, 1992.

[7] J. A. Thornton, A. S. Penfold, and J. L. Lamb, "Sputter-deposited Al 2 O 3/Mo/Al 2 O 3 selective absorber coatings," *Thin Solid Films*, vol. 72, no. 1, pp. 101–110, 1980.

[8] S. Zhao, "Spectrally selective solar absorbing coatings prepared by dc magnetron sputtering." Acta Universitatis Upsaliensis, 2007.