Survey of Intelligent Lighting System

Jitesh Kumar
Department of Electronics and Communication Engineering
Faculty of Engineering, Teerthanker Mahaveer University, Moradabad, Uttar Pradesh, India

***ABSTRACT:** Smart lighting is an energy-efficient lighting system found to be most effective system in energy saving which involve high-efficiency fixtures and automatic systems that allow changes based on factors such as the availability of occupancy or daylight. Lighting is the purposeful application of light to achieve a certain aesthetic or functional effect. This requires lighting for the activities, lighting for the accent and general lighting. In view of the current problems of energy waste in India's office lighting, lack of intelligent lighting control and single adjustment mode based on the domestic intelligent control system, development status, current stage technology, etc., this paper suggests adopting Arduino as the main controller, combining with the inductive infrared sensor and light sensor, using the Wi-Fi network as the main controller. The aim of this device is that it has low cost and low carbon green characteristics, which are very suitable for office climate.*

***KEYWORDS:** Smart lighting, Work place, Microcontroller, Sensors, Wi-Fi, Network module, Energy saving.*

INTRODUCTION

The sensor technology is an evolving phenomenon of interconnected everyday objects. It brings with it the idea of smart homes where consumer electronic goods and devices are automated and can be easily operated by users to enhance convenience, comfort, performance and health. Lighting plays a profoundly big role in our everyday lives inside the multiple subsystems of a smart house, not only at night, but also during the day when artificial lighting is used to light up the indoors. The penetration of light emitting diodes (LEDs) as the main light source in the residential segment is expected to be nearly 50 per cent in 2016 and over 70 per cent in 2020, indicating a high acceptance rate of solid state LED lighting by consumers due to its high energy efficiency and long lifespan. Compared with halogen bulbs or fluorescent lamps, even more technologically complex and demanding controls can be performed on them with the development of LED technologies. As a result, improvements in living standards in terms of comfort, ambience, customizability and power savings can be achieved by using artificial lighting through an intelligent lighting system based on LEDs.

For instance, the LED luminaires' brightness and color can be managed, functionalities such as dimming can be allowed to save power, or lighting color can be changed to match the occasion, mood, or circumstance. Artificial lighting accounted for 15 per cent of energy usage in residential buildings in a study published by the International Energy Agency in 2015. Daylight harvesting, which is a process by which daylight is used to offset the amount of electrical energy required to illuminate a room, can save up to 27 percent, or even 40 percent, of lighting power in areas receiving sufficient daylight. Seeing the great potential of smart lighting, many industrial companies have taken up the task of manufacturing consumer goods, such as Philips Hue, OSRAM Lightify and LIFX. While these are the market's leading smart lighting solutions, many places still lack them. For example, there is no closed-loop feedback control for the room's illuminance level and thus daylight harvesting cannot be used without using external sensors. Many other problems related to smart lights such as Philips Hue and smart homes in general that interact with IoT are security and privacy issues.

Along with some other smart home devices, the Philips Hue system was studied to demonstrate some security vulnerabilities, and was even hacked into successfully. This poses a major concern as hackers

are then able to track the status of these smart homes eliminating all privacy and will even be able to regulate the lights that cause the entire house a blackout, making the house's owner worse off than using conventional wall switch lighting systems. There are currently many problems in the traditional office lighting system, among which the most significant is the waste of energy and the suitability of indoor illumination. Therefore, in the design of the lighting system, based on the realization of convenient lighting, to minimize resource waste, make full use of natural light sources and combine natural light indoor and outdoor. Based on the intelligent office lighting system of Arduino, it uses advanced electromagnetic voltage control and electronic sensing technology to monitor and track the power supply in real time, change the voltage and current amplitude of the circuit automatically and smoothly, and reduce the additional power consumption caused by unbalanced lighting load.

LITERATURE REVIEW

Internet of Things is the internetworking of devices such as heart monitoring, cars with embedded sensors, environmental monitoring, home automation and lightning that allow these devices to collect, communicate, exchange, receive and transmit data over a network. The Internet of Things is about making the natural world smart including the buildings used by living beings such as homes and hospitals. This paper addresses numerous sensors, such as motion sensors, luminance sensors and temperature sensors that are installed in the home. This paper also introduces an algorithm for saving the energy of lights and air conditioners in the entire house. Smart street lights is a project on smart street lighting control to automate the problem of street power use and street lighting, late at night.

Today street lights are being replaced with LED street lighting system that reduces power consumption. The other advantage of LED's is that it is easy to monitor the light. Therefore, street light control dependent on motion detection can be programmed with ease [1]. The paper discusses these risks first with the use of actual tools currently available on the market. They then argue that as more devices of this kind appear, the vectors of the attack are rising, and protecting the house's privacy/security becomes more demanding. This paper favors the device-level safety with network-level security solutions that can track network behavior to detect suspicious behavior and also suggest the use of software-defined networking technologies to dynamically block/quarantine devices based on their network operation and within the house context such as time-of-day or occupancy level [2].

Smart Home is implemented to provide convenience, energy conservation and enhanced health. In Indonesia the Smart Home System is still rarely used due to the cost and complexity of having the system. The goal of this paper is to provide a Small Smart Home Network built and produced using Arduino microcontroller based WLAN network. The system is capable of monitoring and regulating lighting, room temperature, alarms and other devices used in the home. Results from system testing show proper monitoring and control functions can be performed from a computer connected to a network which supports HTML [3]. This paper proposes a smart HEMS architecture that simultaneously contemplates both energy use and generation. The energy monitoring modules based on ZigBee are used to track the energy usage of home appliances and lights. A Renewable Energy gateway based on PLC is used to track renewable energy generation. The home server collects the data on energy usage and generation, analyzes them for calculating electricity, and monitors the schedule of home energy use to reduce energy costs. The remote energy management system aggregates, compares, and produces valuable statistical analysis information, the energy data from various home servers [4].

In home environments the Internet of Things is increasingly widespread. Consumers turn their homes into smart homes, with sensors, lighting, appliances and locks connected to the internet, powered by voice or other user-defined automations. Security experts have established IoT and smart home issues like privacy threats and insecure and unstable devices. Recent high-profile attacks, such as the Mirai DDoS attacks, reinforce those concerns. No research, however, has researched the security and privacy

issues of end users who actually set up and communicate with the smart homes today. This work aims to use IP (Internet Protocol) based technologies to allow users to track and control household appliances (lights). Devices accessing the home network will use handheld devices connecting to the Wireless Internet. Tests conducted on a 5-lamp prototype building, a door limit switch is fitted with sensors, ACS172 current sensors 5A to monitor total power consumption and current measurements were at home.

From the results of testing the built applications, home appliances such as lights were able to be controlled, the door condition can be monitored and power usage at home monitored [5]. His paper proposes a semantic home automation framework, USHAS (User-configurable Semantic Home Automation Framework), which adopts Web Service and WSBPEL for automated process execution; OWL and OWL-S for home environments and ontology of service; and a self-defined markup language, SHPL (Semantic Home Process Language), for semantic process description [6]. This paper research the privacy of smart home devices in home residence settings and demonstrate how a simple network traffic analysis could compromise the privacy of home owners.

This paper first measure normal traffic patterns created on smart home devices that are commercially off-the-shelf (COTS), and identify potential vulnerabilities to privacy and developed a smart home hub-integrated solution to reduce such danger by obscuring actual synthetic traffic on the network. This paper recommend that the smart home industry consider implementing this approach to improve privacy in the smart home environment in their products[7]. This paper aims to develop a low-cost, extensible, scalable wireless smart home automation system using IoT that uses wireless communication integration, cloud networking to provide users with a user-friendly interface and ease of deployment to monitor a range of devices from remote locations. This paper introduces the design of a system for smart home automation that uses the combination of cloud networking and wireless communication, to remotely control various electrical appliances (like lights, fans), and to use a smartphone for users inside their home.

METHOD OF OPERATION

Different sensors in the system are mounted in the room along with the controller, the indoor parameters measured by different measurement devices are transmitted to the user via the Arduino controller. It is not the responsibility of the Arduino microcontroller to collect data. It is solely responsible for transmitting the data collected by each node to the system through the communication network. The smart lighting system has an automatic brightness adjustment feature, which allows the user to adjust the brightness of the indoor light at any time to achieve the most comfortable lighting effect. At the same time, the cell phone can be operated remotely, the indoor lighting switch can be controlled remotely, the brightness adjustment and the scene presets.

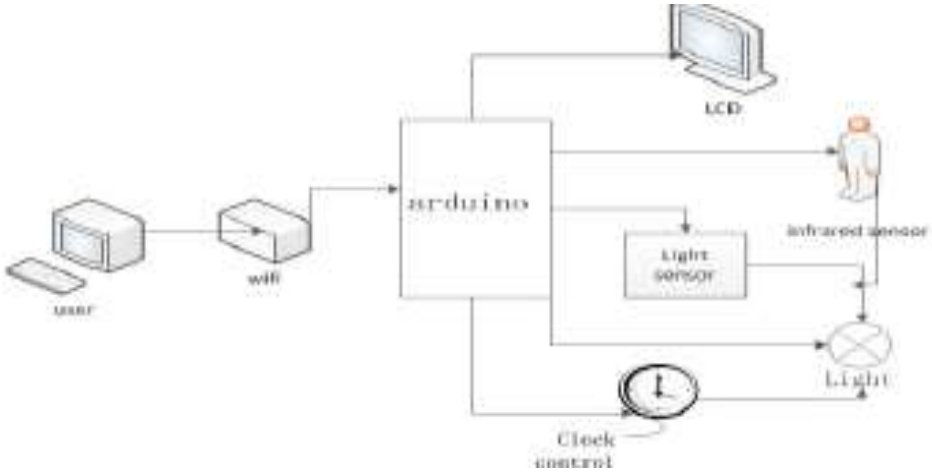

FIGURE 1: System structure

Communication Network

To make the system more convenient to connect to Computer or mobile devices and prevent trivial cabling, the WiFi network is chosen as the carrier for data transmission and reception. The Esp8266 is an ultra-low-power UART-WiFi chip built for mobile devices and IoT applications. This module provides users with a highly optimized WiFiSoc system that can be used as a slave to operate on other host MCUs. A small wireless LAN can be set up in the Esp8266 development environment by means of the corresponding configuration. The Esp8266 has a rich hardware interface that supports UART, I2C, PWM, GPIO, and ADC, and is a very suitable IoT board.

Intelligent Lighting System

The smart lighting system is radically different from the conventional office lighting. Conventional lighting is operated by "solid" and "soft". The standard wall switch or the disconnect switch in the distribution box is used to control the control circuit process to gain loop control. The smart lighting system is" weak "and" solid. The consumer need not access the powerful electricity at all, greatly decreasing the occurrence of safety injuries, and the control methods are diversified. The switch can control any circuit in the network, breaking any set of lights, you can set other functions as well. The machine consists mainly of a clock module, a communication module, a light detection module, an infrared sensing module for the human body, a control module and an execution device, and the execution device has an LED light and an LCD monitor. The hardware wiring diagram of this system is shown in Figure 2.

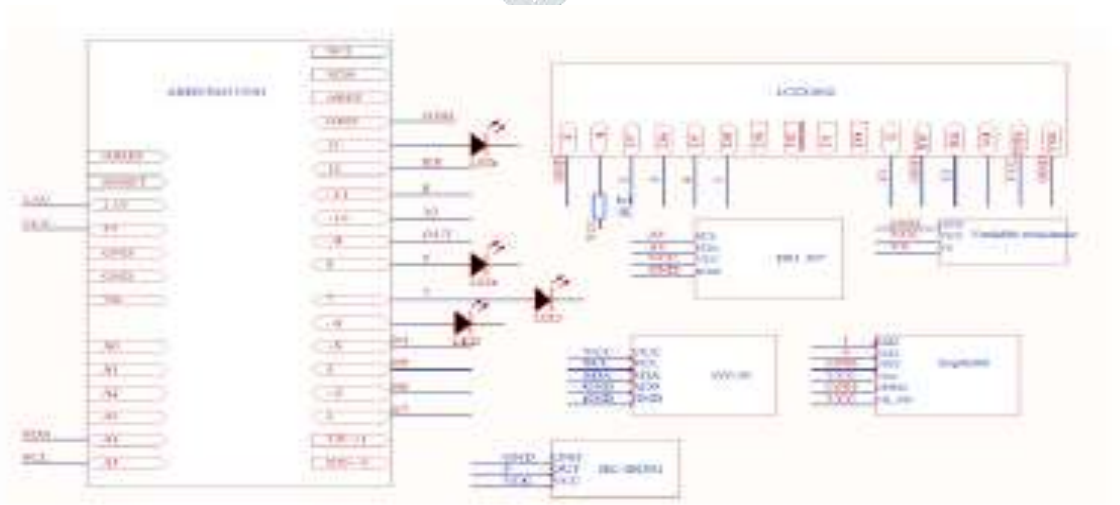

FIGURE 2: System wiring diagram

The system's operating philosophy is to write the software to perform the necessary functions on the Computer unit, and then upload the main board of the controller. The controller is used as the control center and is divided into manual and automatic modes. In the automatic mode, when the sensor senses the specific material, the original low level is switched to the high level, the relevant lamps are lit or the curtain is switched on; in the manual mode, the control center and the sensor are transmitted and the data is accepted through the wireless Wifi.

Software Design for Intelligent Lighting

The architecture of the program is divided into module of clock, module of contact, module of illumination, module of human body infrared, controller and unit of execution. The execution unit has LED light and LCD display.Each element communicates with each other and interacts to complete the system task.

Clock Module

This machine chooses DS1307, DS1307 adopts I2C interface. I2C is a synchronous protocol with a clock signal that enables many slave devices to be linked to a single bus.I2C slave devices are differentiated by address, and as long as the addresses do not clash, other devices can be connected. I2C speed is 100 kbs, 400 kbps and 1 Mbps. The current PC time value is written into the module chip while compiling, and the time is then displayed on the LCD panel. Changing the resistance value of the variable resistor makes visible the subtitles of the LCD panel.

GY-30 Lighting Module

The BH1750FVI chip is used for the illuminance sensor of the module. The module has a built-in 16-bit digital-to-analog converter. It can directly emit a digital signal without complex calculations. The lighting sensor adopts the thermoelectric effect concept. This sensor primarily uses a sensing portion that is extremely sensitive to low light. The output signal in the linear range is proportional to the natural illuminance. The output signal is proportional to the natural illuminance in the linear range. The visible light emitted by the filter is irradiated to the imported photodiode, and the visible light illuminance is transformed by the photodiode into an electrical signal, and the electrical signal enters the processing device of the sensor. Through measuring the voltage, the illumination module gets valid data, and this photo sensor can be calculated directly through a photometer. This module's communication mechanism is I2C protocol, which uses two-wire network to relay serial port data. The working philosophy is mainly to transmit and receive data through addresses. First, it determines its first address in Arduino, adds an interface as the address transmit and receive, and uses another pin as the port for transmitting data.

Communication Network

The ESP8266 is an ultra-low-power UART-WiFi pass-through module with industry-leading package size and ultra-low-power technology designed for mobile devices and IoT applications that link physical devices of users to Wi-Fi performing Internet or LAN communication for networking purposes on the wireless network. The ESP8266 is an ultra-low-power UART-WiFi pass-through module with industry-leading package size and ultra-low-power technology designed for mobile devices and IoT applications that link physical devices of users to Wi-Fi — perform Internet or LAN communication for networking purposes on the wireless network.

Human Body Infrared Sensor Module

This device uses the HC-SR501 module. This module is inexpensive, and the greatest advantage of the HC-SR501 is that there are two detection modes. There are two knobs to change the sensitivity and delay. The three pins next to the knob are used as the detection mode selects the jumper. If the jumper

cap is placed into the upper two pins, it is in the single detection mode and the lower two pins are in the jumper mode. Single detection mode: Once the sensor senses the movement of the human body, the device generates a high level. The high level switches to a low level after a period of time delay, and the amount of detections is only one time; Continuous mode of detection. If the sensor senses the human body's movement, the device generates a high level, but if the human body continues to move within the sensor range, the sensor's high level remains accurate until the human body leaves the sensor detection range and the high level becomes small.

CONCLUSION

This software sets the scene in advance. When it is used, the user can access the corresponding scene by simply transmitting commands across the network. The scenes the device designs are: illuminate a certain number of lights. If there is anyone in a certain place, you can only light the lights in this place, such as the conference room switch and office lighting. Typically speaking, the system developed this time focuses on energy efficiency, cost savings, safety enhancement, and better maintenance for the future system. This also effectively completes the initial testing and viability of the office lighting system, both from the hardware.

REFERENCES

[1] C. Dixon *et al.*, “An operating system for the home,” 2012.

[2] A. Adriansyah and A. W. Dani, “Design of small smart home system based on arduino,” 2014, doi: 10.1109/EECCIS.2014.7003731.

[3] V. Sivaraman, H. H. Gharakheili, A. Vishwanath, R. Boreli, and O. Mehani, “Network-level security and privacy control for smart-home IoT devices,” 2015, doi: 10.1109/WiMOB.2015.7347956.

[4] J. Han, C. S. Choi, W. K. Park, I. Lee, and S. H. Kim, “Smart home energy management system including renewable energy based on ZigBee and PLC,” *IEEE Trans. Consum. Electron.*, 2014, doi: 10.1109/TCE.2014.6851994.

[5] M. Kusriyanto and B. D. Putra, “SMART HOME USING LOCAL AREA NETWORK (LAN) BASED ARDUINO MEGA 2560,” 2017, doi: 10.1109/ICWT.2016.7870866.

[6] Y. W. Kao and S. M. Yuan, “User-configurable semantic home automation,” *Comput. Stand. Interfaces*, 2012, doi: 10.1016/j.csi.2011.08.002.

[7] S. Mennicken, A. Dey, J. Hofer, and E. M. Huang, “Casalendar: A temporal interface for automated homes,” 2014, doi: 10.1145/2559206.2581321.