A Review Paper on Regenerative Braking System

Shikha Parashar

SOEIT, Sanskriti University, Mathura, Uttar Pradesh, India

Email Id- shikha.soet@sanskriti.edu.in

ABSTRACT: In recent years, the concerns about the environmental effects of the traditional car (ICE-Internal Combustion Engine) have led to the improvement and growth of the electric vehicle (EV). The evolution of the regenerative braking system has led to the need to increase overall vehicle performance (RBS) whenever driver applied the brake the energy is completely loss in the form of kinetic energy due to friction loss between wheel of vehicle and road. The use of regenerative braking allows this energy to be stored in the form of electrical energy in a battery, increasing the engine's efficiency. This paper discusses braking systems, types of braking systems, and regenerative braking systems, as well as the types of regenerative braking systems, the need for regenerative braking systems, and the applications of regenerative braking systems, as well as how regenerative braking systems aid in increasing the efficiency of electric vehicles. There are a variety of cars that employ regenerative braking systems, and many companies will be able to use this sort of regenerative braking system in the future to improve engine efficiency. This paper elaborates the applicability of the regenerative braking system and its applicability in various sectors to solve the existing problems.

KEYWORDS: Brakes, Braking System, Electric Vehicle, Regenerative Braking System, Regenerative Brakes.

1. INTRODUCTION

An automobile, often known as a car or a car, is a vehicle designed primarily for passenger transportation and powered by an internal combustion engine that burns a volatile fuel. Braking in a moving vehicle refers to using the brakes, generally by depressing a pedal, to slow or halt the vehicle's progress. The braking distance is the delay between when the brakes are applied and when the vehicle comes to a complete stop. When brakes are applied to a vehicle utilising standard braking systems, kinetic energy is converted to heat due to friction between the wheels and the brake pads [1]. This heat is transported away by the airstream, and the energy is wasted. Braking systems can be classified in various ways, a brief classification of braking system is explained below:

1. Mechanical Brakes:

The brake force supplied by the driver on the brake pedal is transmitted to the ultimate brake drum or disc rotor via different mechanical linkages such as cylindrical rods, fulcrums, springs, and so on to decelerate or stop the car with this sort of braking system. shows a type of mechanical braking drum brake that is constructed using a spring and a drum. When the brakes are applied, the actuation mechanism compresses the connected brake shoes, causing frictional contact with the revolving disc rotor and causing the vehicle to brake [2], [3].

2. *Hydraulic Brakes:*

The master cylinder converts the brake power supplied by the driver on the brake pedal into hydraulic pressure, which is then transmitted from the master cylinder via the brake lines to the ultimate brake drum or disc rotor in this sort of braking system. The braking force is related to the ratio of the master-cylinder cross-sectional area to the disc or drum-brake wheel-cylinder cross-sectional areas in a hydraulic braking system. As a result, these cylinder sizes are carefully selected to achieve the necessary braking effect. Fig. 1**,** illustrates the working of conventional braking system, which uses force applied by the user on pedal to stop the vehicle.

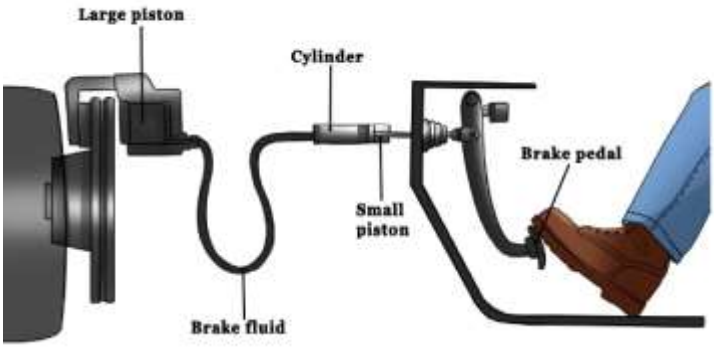

Fig. 1: Illustrates the working of conventional braking system, which uses force applied by the user on pedal to stop the vehicle[4]**.**

3. Air or Pneumatic Brakes:

The brake pedal power is transferred from the brake pedal to the final drum or disc rotor via compressors and valves in this sort of braking system. Because hydraulic brakes cannot transmit high braking force over longer distances and pneumatic brakes provide stronger braking force than hydraulic brakes, air brakes are commonly employed in large vehicles such as buses and trucks.

4. Vacuum Brakes:

In this type of braking system, the vacuum inside the brake lines in causes the brake pads to shift, which ultimately stops or accelerates the vehicle in turn. The key components that combine to create a vacuum braking system are the exhauster, main cylinder, brake pads, valves and disc rotor or drum. Vacuum brakes were employed on older or conventional trains, but they have been replaced with air brakes for days due to their poorer performance and slow braking.

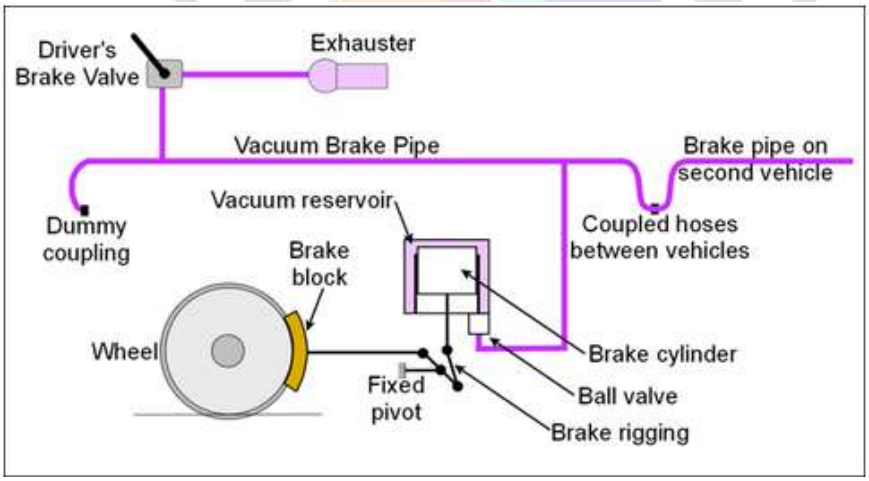

Fig. 2: Illustrates the working of vacuum braking system in which the force developed due to hydrostatic forces are used to stop the motion[5]**.**

5. Regenerative Braking:

It is a form of electrical braking in which the resistance given by the rheostat produces the real braking, and in which the rheostat is linked to the circuit in which the resistance supplied by the rheostat causes the vehicle to accelerate or stop. The benefit of dynamic braking is that no electricity from the supply is required to stop the engine. Dynamic braking can be used to stop DC motors, induction motors, and synchronous motors[5]**.** Fig. 2, Illustrates the working of vacuum braking system in which the force developed due to hydrostatic forces are used to stop the motion.

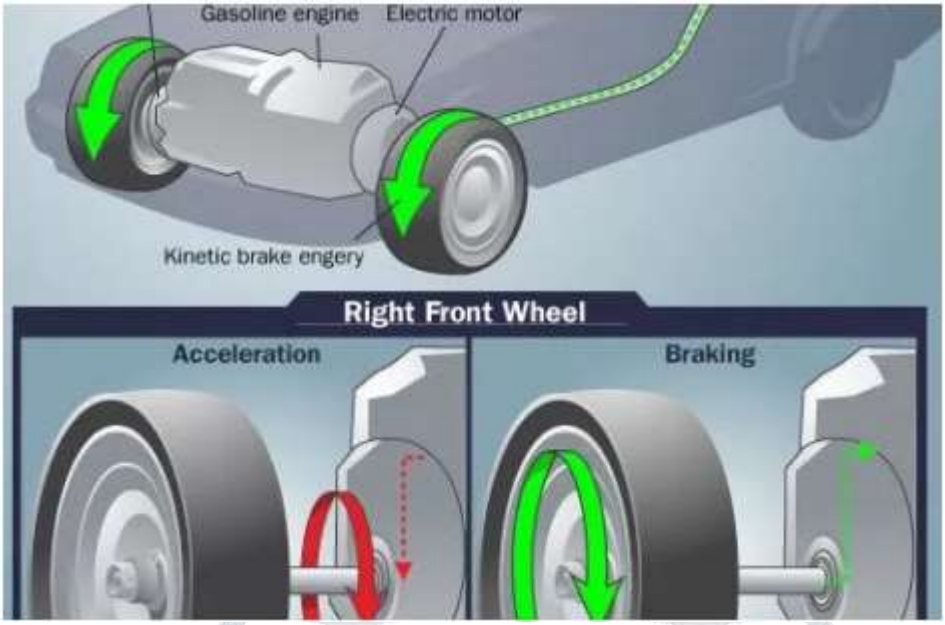

Fig. 3: Illustrates the working of regenerative braking system used to deaccelerate the motion of the vehicle[6]**.**

This technology has mainly replaced the conventional braking system in automobiles since the old braking system always uses mechanical friction to waste kinetic energy as heat energy in order to produce the stopping effect[6]. Fig. 3, Illustrates the working of regenerative braking system used to deaccelerate the motion of the vehicle. According to studies, braking consumes around one-third to one-half of the energy necessary for vehicle operation in urban driving. When the electric motor is in the braking stage, the kinetic energy is a surplus energy because the energy is wasted as heat, resulting in a loss of total energy. When the electric motor is in the braking stage, the kinetic energy is a surplus energy because the energy is wasted as heat, resulting in a loss of total energy. Regenerative braking is a technique of braking that converts kinetic energy from the motor into electrical energy, which is then supplied back into the battery supply. In theory, the regenerative braking system may use the same concept as an alternator to convert a significant portion of its kinetic energy to charge the battery. When the driver applies power to the brake pedal in regenerative braking mode, the electric motor operates in reverse direction, slowing the automobile. The brake controller is the heart of the regenerative braking system since it regulates the whole operation of the motor. The brake controller's responsibilities include monitoring the wheel's speed, calculating torque and rotational force, and generating power to be sent back into the batteries. The brake controller sends the power produced by the motor into the batteries or capacitors while braking. The activated current loop ion of the winding would enhance the inductor current iab. According to Lenz's Law, when the magnetic field of the winding increases owing to iab rise, a reverse induction voltage eab must resist the variation of the magnetic field. Fig. 4, Illustrates the working of regenerative braking system used in electronic vehicles to stop the vehicle.

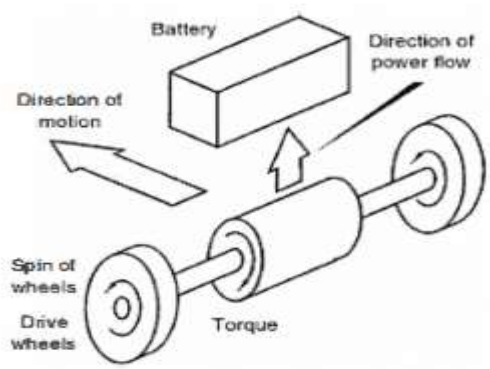

Fig. 4: Illustrates the working of regenerative braking system used in electronic vehicles to stop the vehicle[7]**.**

2. DISCUSSION

Inertia energy storage device or electro mechanical battery, a flywheel is a device that stores inertia. Mechanical energy is captured and stored in this material. By using the same motor and generator, the flywheel is supported by a floating magnet. It transfers electric power to kinetic energy, and then kinetic energy back to electric power. When the supply of energy is greater than the demand, it stores energy; when the demand exceeds the supply, it releases energy. Flywheels are employed in regenerative braking systems to smooth out shaft speed changes caused by torque fluctuations. Whenever the source of the driving torque or load torque is inherently variable, it is able to perform. Increase the angular velocity of the flywheel to increase its performance, and decrease its velocity to release the stored energy to improve its performance.

In terms of identical mechanical strength, the specific energy of flywheels increases proportionately when the weight of rotating material is lowered. ABS is designed to improve braking efficiency and preserve vehicle stability in a variety of driving situations. Controlling the slip ratio at the point when the most braking force can be given to the wheels is how it's done. The optimal slip ratio is placed into the controller as a reference value for ABS control. The hydraulic actuator is then supplied the slip error. For greater performance at reduced power consumption, electric vehicle applications demand a high constant power to constant torque ratio, generally in the range of 3 to 5. From a system engineering standpoint, a dc motor model will be utilised to simplify the entire electric traction system modelling. The simple equations for traditional permanent magnet stator dc machine models may be adjusted as follows to mimic the constant power region of field oriented controlled ac machines.

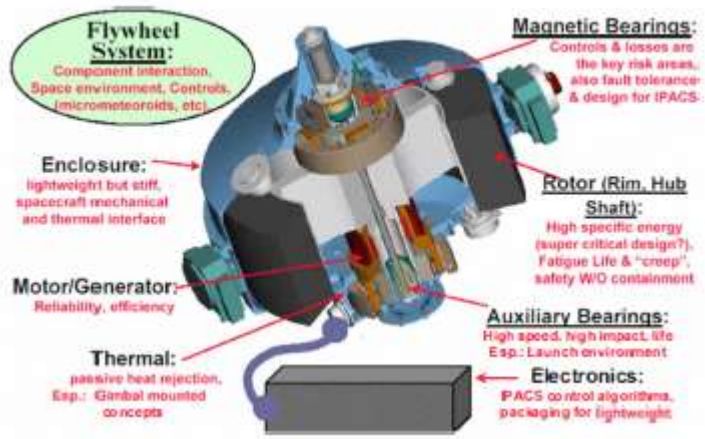

Fig. 5: Illustrates the working of fly wheel system in association with the electronic vehicle to store mechanical energy[8].

The rotor flux value is determined using an equation block in this updated version of the model. Above base speed, the motor's EMF is reduced according to angular rotor speed until the base speed is maintained, at which point it is held constant. Above maximum speed, the motor is regarded to be in natural mode, and the rotor angular speed is reduced proportionally to the square of the rotor angular speed. Fig. 5, illustrates the working of fly wheel system in association with the electronic vehicle to store mechanical energy. A current feedback loop is utilised to adjust the output torque of the electric motor. A gain block, which regulates the voltage supply, amplifies the PI controller output.

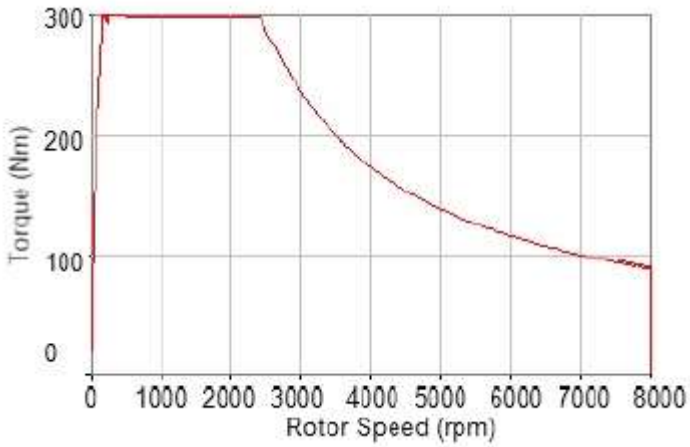

Fig. 6: Illustrates the variation of rotor speed in revolution per minute to torque generated in the shaft[9].

A regenerative braking system is used to fuel pure electric cars. An electrically driven engine is included in this gadget. When the brakes are engaged, the engine works as a generator and a battery charger. Fig. 6, Illustrates the variation of rotor speed in revolution per minute to torque generated in the shaft. Frictional heat energy has been converted into braking energy that may be used. As a result of this engine's "performance in contrast," electricity was created. Typically, the automobile drives at a modest speed, with the braking mechanism including friction. When compared to a vehicle that relies solely on friction for braking, the regenerative braking system offers a number of significant advantages. When there is no traffic, low-speed, stop-and-go traffic necessitates deceleration; regenerative braking is required. The machine will be responsible for the majority of the overall braking force. This substantially improves a vehicle's fuel economy and increases the attraction of vehicles that employ regenerative braking for city driving.

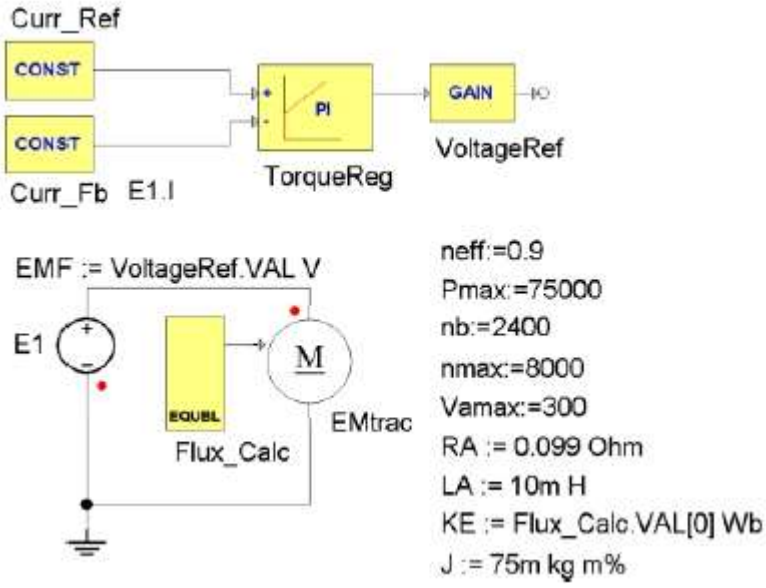

Fig. 7: Illustrates the electronic circuit associated with the electronic vehicle associated with the regenerative braking system [10]**.**

An electric system driven only by an electric motor comprises of an electric motor that serves as both a generator and a motor. Fig. 7, Illustrates the electronic circuit associated with the electronic vehicle associated with the regenerative braking system. When the system is cruising, the power is supplied by the motor; however, when braking is required, the electronic unit controls the charge water that flows through the motor, and the motor rotates back to behave as a generator due to the resistance offered, and the energy is stored in the battery or bank of twin layer capacitors. In a hybrid system, the motor would be linked to another power source, often an I.C engine. The system's most important components. A device that converts

kinetic energy from the vehicle into chemical energy stored in the battery for energy recovery. As a result, when the brakes are used, the energy that would otherwise be wasted is utilised to recharge the batteries.

Electric vehicles (EVs) are a new type of vehicle that has recently been introduced to the Indian market. These vehicles are propelled by electric motors that are fuelled by rechargeable battery packs. The electric motor that powers the car's wheels plays an important role during braking. When the brake pedal is pushed, the regenerative braking circuit switches the motor such that it now works in reverse to offset the direction of the wheels. Electrical vehicles have a number of advantages over non-electric vehicles, one of which is the braking system. When a driver applies the brakes in a non-electrical vehicle, the energy is completely lost in the form of kinetic energy due to friction loss between the vehicle's wheels and the road, but in an electric vehicle, this energy is stored in the form of electrical energy in a battery, which is then used to charge the battery, which is then used to drive the vehicle. After study many research paper we get to increase the regenerative energy, the large motor and the battery are connected, however, it is very difficult because of the cost and the limit of the inverter capacity.

3. CONCLUSION

The objective of the regenerative braking system in automobiles is to save some of the energy wasted while braking. The regenerative braking mechanism is designed to recover some of the battery charge that has been lost. In terms of car braking. Friction brakes turn the energy into heat, which is then dispersed into the atmosphere. The mechanical energy of the wheels is converted into a usable battery charge by spinning the generator rotor with this energy. The ultra-capacitor improves the car's transient state at start up, gives the battery a smoother charging characteristic, and improves the overall performance of the electric vehicle system. The Buck-Boost converter aids in the regenerative braking system's power management, such as enhancing acceleration. Finally, the flywheel is utilised to improve power recovery through the car's wheel. Finally, regenerative braking is a fantastic notion that has been created by automobile experts. If this technology is completely exploited and improved, a new generation of electric vehicles will be fully on the road in the near future. Although there has been conducted extensive research in the sector of regenerative braking system but this domain is not limited and more research is demanded to explore the full potential of the regenerative braking system.

REFERENCES

[1] X. Nian, F. Peng, and H. Zhang, "Regenerative braking system of electric vehicle driven by brushless DC motor," *IEEE Trans. Ind. Electron.*, 2014, doi: 10.1109/TIE.2014.2300059.

[2] "Hydraulic Brake System Components," *worldwide hydullic professional*. .

[3] M. H. Kwon, J. H. Park, G. S. Gwak, J. W. Huh, H. K. Choi, and S. H. Hwang, "Cooperative control for friction and regenerative braking systems considering dynamic characteristic and temperature condition," *Int. J. Automot. Technol.*, 2016, doi: 10.1007/s12239-016-0045-6.

[4] J. K. Ahn, K. H. Jung, D. H. Kim, H. B. Jin, H. S. Kim, and S. H. Hwang, "Analysis of a regenerative braking system for Hybrid Electric Vehicles using an Electro-Mechanical Brake," *Int. J. Automot. Technol.*, 2009, doi: 10.1007/s12239-009-0027-z.

[5] F. Yusivar, H. S. Haslim, Y. Farabi, and K. Nuryadi, "New control scheme for combined regenerative and mechanical brakes in electric vehicles," *Int. J. Technol.*, 2015, doi: 10.14716/ijtech.v6i1.780.

[6] F. Ji and M. Tian, "Research on braking stability of electro-mechanical hybrid braking system in electric vehicles," *World Electr. Veh. J.*, 2011, doi: 10.3390/wevj4010217.

[7] D. P. Me and A. Professor, "Intelligent Car Braking System with Collision Avoidance and ABS," *Int. J. Comput. Appl.*, 2015.

[8] B. Li, Q. L. Hu, Z. Shi, and G. F. Ma, "Backstepping and dynamic control-allocation for attitude maneuver of spacecraft with redundant reaction fly-wheels," *Kongzhi Lilun Yu Yingyong/Control Theory Appl.*, 2012.

[9] A. Bibó, G. Károlyi, and T. Bódai, "Fly-wheel model exhibits the hither and thither motion of a bouncing ball," *Int. J. Non. Linear. Mech.*, 2009, doi: 10.1016/j.ijnonlinmec.2009.06.006.

[10] L. Talens Peiró, G. Villalba Méndez, and R. U. Ayres, "Lithium: Sources, production, uses, and recovery outlook," *JOM*, 2013, doi: 10.1007/s11837-013-0666-4.