# FOUR WAY TRAFFIC SIGNAL CIRCUIT USING 555 TIMER

[1]G. Jagadish,[2]J. Yogi Naga Sairam ,[3]P. Venkata Siva Sairam , [4]R. AbhiramaSasidhar ,

[5]V. SaiNandanVarshith.

[1,2,3,4,5]Student, Dept of EEE, Pragati Engineering College, Surampalem.

**ABSTRACT**

*Four Way Traffic Lights Circuit using 555 Timer IC. In this traffic light project we are going to design a circuit, to control traffic lights on a four-way signal. This circuit is designed by 555 Timer IC timer and a decade counter. The timer generates pulses and these pulses are fed to the ten stage decade.Traffic signal lights are very Important to regulate vehicles and traffic on roads, simple four way traffic light circuit is designed with timer IC 555 and counter IC CD4017. we know each traffic signal light setup will have three colors and representing Red for STOP, Yellow for WAIT, and Green for GO, those signals are works based on time intervals. Traffic light has proved to be an amazing way to stop the vehicular collisions and control the traffic jams in today's modern era where everyone owns the different types of vehicles.*

***Index terms: step down transformer, voltage regulator IC, bridge rectifier, A-stable, mono-stable, Bi-stable mode.***

## 1.INTRODUCTION:

Traffic lights, also known as traffic signals, traffic lamps, signal lights, robots arc signalingdevices positioned at or near road intersections, pedestrian crossings and other locations to control competing flows of traffic. Traffic lights were first installed in 1868 in London, United Kingdoin; now used in almost every city of the world. Traffic lights alternate the right of way accorded to road users by displaying lights of a standard color(red, yellow/amber, and green) following a universal colorcode (and a precise sequence to enable comprehension by those who are colorblind).It had two colors, red and green, and a buzzer, based on the design of James Hoge, to provide a warning for color changes. The design by James Hogeallowed police and fire stations to control the signals in case of emergency.

Though uncommon in most American urban areas, timers are used in some other Western Hemisphere countries. Timers are useful for drivers/pedestrians to plan if there is enough time to attempt to cross the intersection before the light turns red andconversely, the amount of time before the light turns green.

## 2. CIRCUIT DIAGRAM:

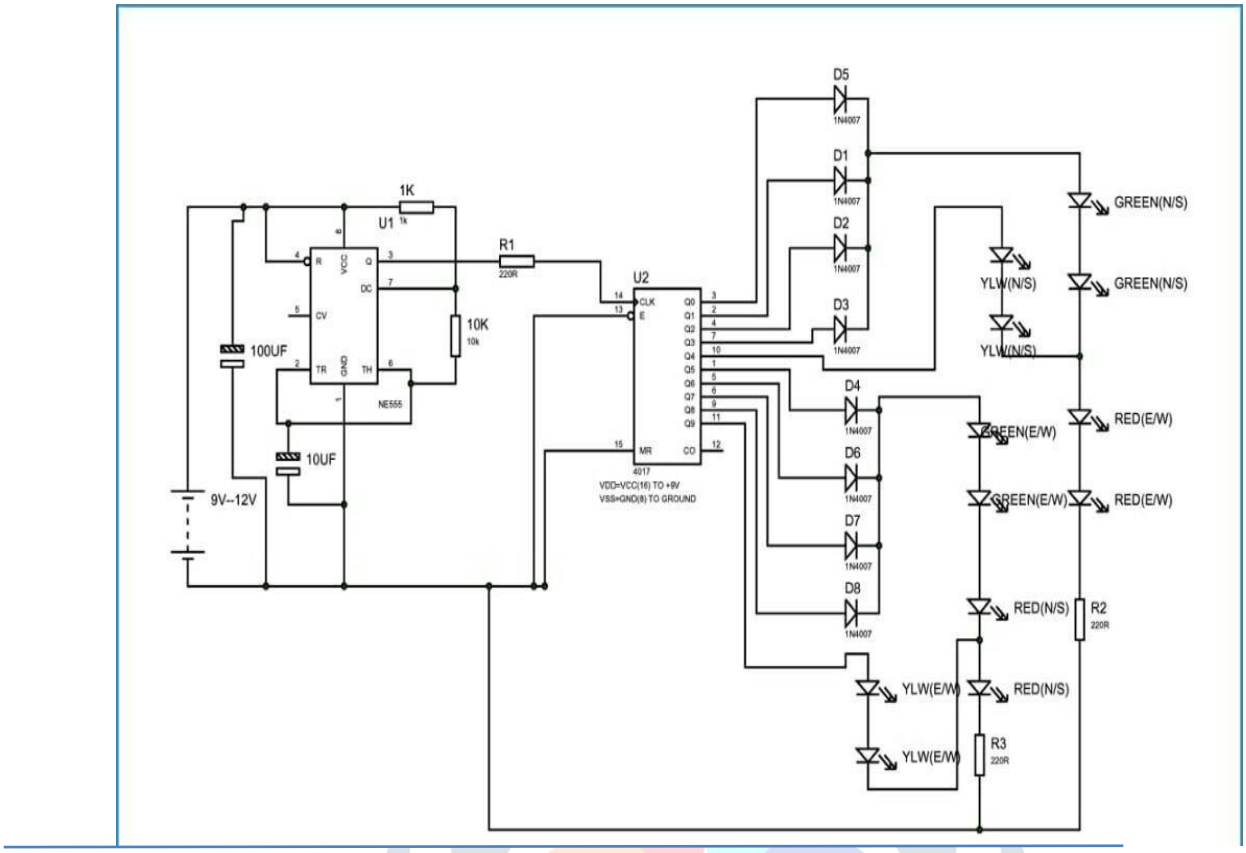


**Fig: 2.1 Circuit diagram**

## 3.CIRCUIT WORKING:

The AC power supply from mains first gets converted into and unregulated DC and then into a constant regulated DC with the help of this circuit. The circuit is madeup of transformer, bridge rectifier made up from diodes, linear voltage regulator 7809 and capacitors.If you observe,the working of the circuit can be divided into two parts.In the first part,the AC Mains is converted into unregulated Dc and in the second part,this unregulated DC is converted into regulated 9V DC. So, let us start discussing the eoring with this mind.Initially, a 230V to 6V Step down transformer is taken and its primary is connected to mains supply. The secondary of the transformer is connected to Bridge rectifier (either a dedicated IC or a combination of 4 1N4007 Diodes can be used). The rectified DC from the bridge rectifier is smoothened out with the help of 10uF Capacitor.So, the output across the 10uF Capacitor is unregulated 6V DC. This is given as an input to the 7809 Voltage Regulator IC. 7809 IC then converts this to a regulated 9V DC and the output can be obtained at its output terminals.

### 4.COMPONENTS:

- +9vto +12v supply voltage
- 555 Timer IC
- IKS,10KN2, 22022 resistors -3pieces
- 10uF and 100uF capacitors
- RED LED (4 pieces), BLUE LED (4 pieces) and YELLOW LED(4 PIECES)
- CD4017 Decade Counter IC
- IN4007 diodes (8 pieces)

## 555 TIMER IC:

The 555 Timer, designed by Hans Camenzind in 1971, can be found in many electronic devices starting from toys and kitchen appliances to even a spacecraft. It is a highly stable integrated circuit that can produce accurate time delays and oscillations. The 555 Timer has three operating modes, bistable, monostable and astable mode.

The 555 IC has the following operating modes:

1. Astable (free-running) mode – the 555 can operate as an electronic oscillator. Uses include LED and lamp flashers, pulse generation, logic clocks, tone generation, security alarms, pulse position modulation and so on. The 555 can be used as a simple ADC, converting an analog value to a pulse length (e.g., selecting a thermistor as timing resistor allows the use of the 555 in a temperature sensor and the period of the output pulse is determined by the temperature). The use of a microprocessor-based circuit can then convert the pulse period to temperature, linearize it and even provide calibration means.
2. Monostable (one-shot) mode – in this mode, the 555 functions as a "one-shot" pulse generator. Applications include timers, missing pulse detection, bounce-free switches, touch switches, frequency divider, capacitance measurement, pulse-width modulation (PWM) and so on.
3. Bistable (flip-flop) mode – the 555 operates as a SR flip-flop. Uses include bounce-free latched switches.
4. Schmitt Trigger (inverter) mode - the 555 operates as a schmitt trigger inverter gate which converts a noisy input into a clean digital output.

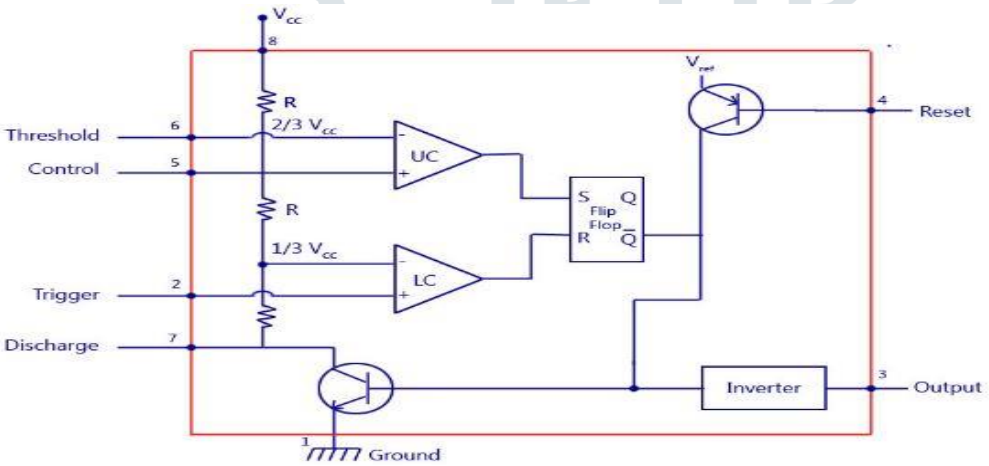


Fig : 4.1 block diagram of 555 timer

## 555 TIMER PIN DIAGRAM:

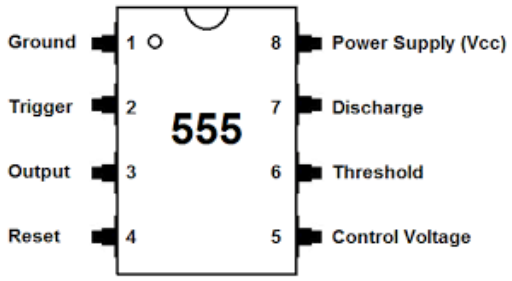


Fig:1.4 555 Pin Diagram

### Pin Description:

Pin 1(GND):Groundreferenc voltage, low level (0V) .

Pin 2(TRIG):The OUT pin goes high and a timing interval starts when this input falls below ya of CTRL voltage (which is typically 1/3 Vcc, CTRL bcing 2/3 Vcc by default if CTRL is left open). In other words, OUT is high as long as the trigger low. Output of the timer totally depends upon the amplitude of the external trigger voltage applied to this pin.

Pin 3(OUT): This output is driven to approximately 1.7 V below +Vcc, or to GND.

Pin 4(RESET): A timing interval may be reset by driving this input to GND, but the timing does not begin again until RESET rises above approximately 0.7 volts. Overrides TRIG which overrides threshold.

Pin 5(CTRL): Provides "control" access to the internal voltage divider (by default, 2/3 Vcc).

Pin 6(THR): The timing (OUT high) interval ends when the voltage at threshold is greater than that at CTRL (2/3 Vcc if CTRL is open).

Pin 7(DIS): Open collector output which may discharge a capacitor between intervals. In phase with output.

Pin 8(Vcc): Positive supply voltage, which is usually between 3 and 15 V depending on the variation.

**Pin Diagram:**

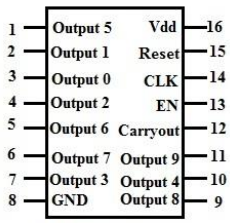

4017 -Decade Counter

**Ground pin & supply pin(Pin 8 & Pin 16):**

Pin number 8 acts as ground and it must be connected to negative supply voltage & pin number 16 is the supply pin for CD4017 and it is connected to positive voltage supply.

**Carry Out Pin(Pin 12):**

The pin 12 is supplied with the CARRY OUT signal. It completes one full cycle for every 10 clock cycles. This is used to 'ripple' the IC, which means to delay in counting operations

**9 to 12 v Supply Voltage:**

SUPPLY and VOLTAGE Supply means the input given to make a system work Voltage is the potential difference between two points Supply voltage is the input/source voltage given in to the circuit to make it work .

**Results:**

THIS KIT EXPLAINS ABOUT THE PROJECT " 4 WAY TRAFFIC SIGNAL USING 555 TIMER IC AND COUNTER IC CD4017".

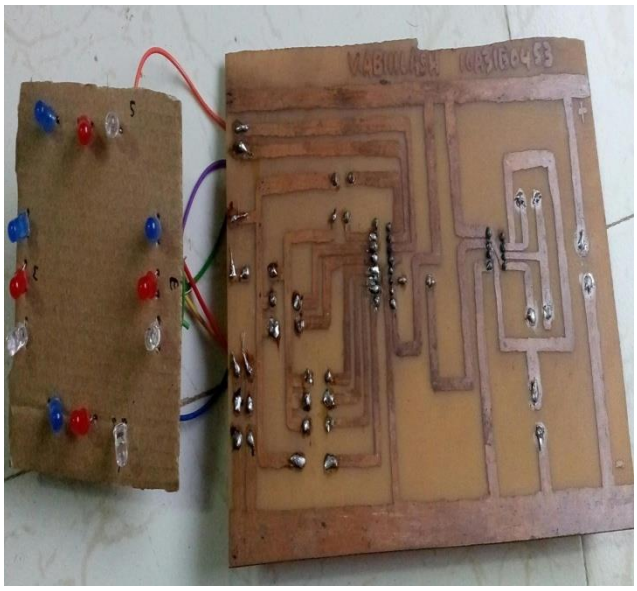

**Fig: Showing the Prototype model of 4 way Traffic Control Using 555 TIMER IC .**

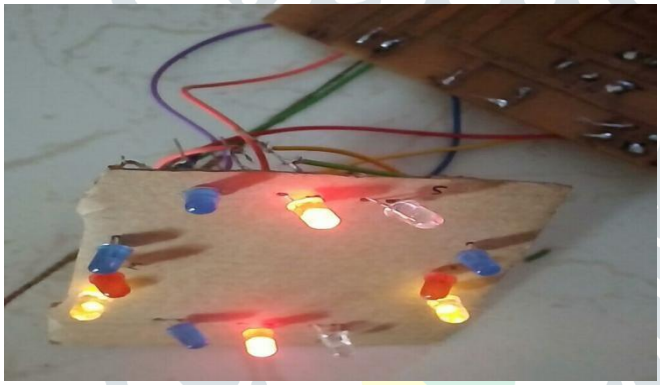

**Fig: showing the LED Display when pin Q4 goes high , the yellow LED on EAST and WEST will be ON along red LED on NORTH AND SOUTH . So if we assume clock is 1 HZ, the EAST and WEST side are signalled YELLOW to slowdown for 1 sec and also the NORTH and SOUTH side are signaled RED to stop during this time.**

## 6.CONCLUSION:

India is a populated country. Traffic jam is the common phenomena in cities like Hyderabad, Mumbai,,etc. Now a days traffic problems are more in smallcities like kakinada,rajamahendravaram also. Traffic jam is obstructing for trade and commerce also waste **v**aluable time. The main reason of traffic jam can be not maintain traffic rules, faulty traffic signaling systems. Illegal parking is another reason for traffic jam. Cars, trucks and other vehicles are parked almost everywhere. Faulty traffic signaling systems, inadequate manpower and narrow road spaces and overtaking tendency of drivers create pro-longed traffic congestions and intensify sufferings of computers keeping people motionless as well as creating suffocating condition in the streets. Also there are bus terminals not authorized by the traffic department and drivers do not go by traffic rules. VIP protocol maintaining is another reason for frequent traffic jams in th**e** streets and divider problem in the cities different important roads also causes congestion. So if we want to overcome this problem we must install a modern traffic controller system also grow up the tendency of maintaining traffic rules. The reason of taking

four wayTrafficlight Controller as a project to reduce that problem, hopefully this is a good effort. By using this system configuration we can reduce the possibilities of traffic jams caused by traffic lights to an extent.

**Future Scope:**

- The project is useful in developing countries and project has a bright future as it is the improvement of the smart traffic system.
- The system can be replaced by image processing system which can give efficient results.
- We can reduce the density of traffic in particular areas with this process.

**References:**


1) **Akceli k, r., Besley, m. ,Roper, R., "Fundamental Relationships for Traffic house at Signalize intersections "Research report No.340,pp.268,ISBN0869107968,1999.**
2) **"Beauchamp-Baez ,G., Rodriguez-Morales, E., Muniz Marrero, a fuzzy logic based Phase controller for traffic control". IEEE international conference 1997, pp. 1553-1539.**
3) **"A.Hegyi, B. DeSchutter, R.Babuska , S.Hoogendoorn, H.vanzuylen, a fuzzy decision support system for traffic control centres", AUG 2001,pp.358-363.**
4) **Hoyer.,R. ,Jumar.U., fuzzy control of traffic lights" IEEE International conference on fuzzy systems ,1994,pp 1526-1531.**
5) **George J. Klir and Tina A. Folger , "Fuzzy sets,"Uncertainity and Information",Prentice Hall of india, 2004,pp 255-260.**
6) **S.N.Sivanandam,S.N.Deepa by "principles of soft computing", 2 nd edition, ISNN 978-81-265-2741-0,publication in wiley india.**
7) **Sandeep mehan, "Introduction of Traffic light controller with fuzzy control system". International journal of Electronics & comm. Vol,2,issue3, ISSN: 2230-9543.**
8) **QINGHUI LIN, B.W.kwan, L.J.Tumg "Traffic signal control using using fuzzy logic",System, Man and Cybernetics,1997.pp 1644-1649.**