# Digital Image Watermarking

[1]Shweta Singh, [2]Ramesh kadam [3]Shami Tripathi, [4]Abhishek Vankit, [5]Pragati Upadhyay
[1]Student, [2]Student, [3]Student, [4]Student, [5]Assistant Professor
[1]Electronics Engineering,
[1]Shree L R Tiwari College of Engineering of engineering, thane, India

***Abstract*— This paper aims to study the various techniques used in the process of digital watermarking. Watermarking is used to hide data into a carrier before transmitting it. The carrier may be an image, audio or a video. Another form of watermarking is steganography, wherein the data may be transmitted in a completely hidden form. This paper also provides illustrations with the help of MATLAB. This paper describes the process of and results of various techniques used foe watermarking.**

***Index Terms*— LSB, DCT, DWT, FFT**

## I. INTRODUCTION:

Watermarking is used to partially write data into a carrier image, audio or video file. The term "digital watermark" was first coined in 1992 by Andrew Tirkel and Charles Osborne.

Digital watermarking may be used for a wide range of applications, such as:

- Copyright protection
- Digital signatures (to identify the owner of the content)
- Source tracking (different recipients get differently watermarked content)
- Broadcast monitoring (television news often contains watermarked video from international agencies)
- Video authentication

Images can be represented in spatial domain and transform domain. The transform domain image is represented in terms of its frequencies; however, in spatial domain it is represented by pixels. In simple terms transform domain means the image is segmented into multiple frequency bands. To transfer an image to its frequency representation we can use several reversible transform like Discrete Cosine Transform (DCT), Discrete Wavelet Transform (DWT), or Discrete Fourier Transform (DFT). Each of these transforms has its own characteristics and represents the image in different ways.

Simple watermarks could be embedded in the spatial domain of images by modifying the pixel values or the least significant bit (LSB) values; however, more robust watermarks could be embedded in the transform domain of images by modifying the transform domain coefficients.

## II. LSB ENCODING:

We know that most of the information in an image is contained in the most significant bits (MSBs) of the pixel-values of that image. The least significant images (LSBs) contain far less amount of information as far as the overall results are concerned [5].

This technique of watermarking consists of replacing the LSBs of the pixel-values in the carrier image with the MSBs of the pixel-values of the image to be used as a watermark. Thus the watermark-image can be made partially or completely hidden. The receiver can then decode the received image and extract the hidden file.

There are two methods for LSB encoding watermarking, such as:

i. Using Four MSBs of Message image:

Steps:

1. Read both carrier and message image.
2. Convert both images into gray scale.
3. Check size of carrier image and make both image of equal size by using command for resizing.
4. Make lower four bit zero of the pixel value in carrier image applying logical and operation with 240.
5. Get four MSBs of the pixel value in message image, dividing it by 17.
6. Replace four LSBs of the pixel value in carrier image with four MSBs of pixel values of the message image.
7. Display watermark image.

ii. Using One MSB of Message image:

Steps:

1. Read both carrier and message image.

2. Convert both images into gray scale.
3. Check size of carrier image and make both image of equal size by using command for resizing.
4. Replace any higher LSB of the pixel value in carrier image with MSB of pixel values of the message image.
5. Display watermark image.

## III. DCT:

A discrete cosine transform (DCT) expresses a finite sequence of data points in terms of a sum of cosine functions oscillating at different frequencies. discrete cosine transform is very similar to Fourier Transforms, but DCT involves the use of just Cosine functions and real coefficients, whereas Fourier Transformations make use of both Sins and Cosines and require the use of complex numbers. DCTs are simpler to calculate. Both Fourier and DCT convert data from a spatial-domain into a frequency-domain and their respective inverse functions convert things back the other way [4].

DCTs are important to numerous applications in science and engineering. The DCT, in particular is often used in signal and image processing, because it has a strong "energy compaction" property.

Steps in DCT Block Based Watermarking Algorithm:

1. Segment the image into non-overlapping blocks of 8x8
2. Apply forward DCT to each of these blocks
3. Apply some block selection criteria (e.g. HVS)
4. Apply coefficient selection criteria (e.g. highest)
5. Embed watermark by modifying the selected coefficients.
6. Apply inverse DCT on each block

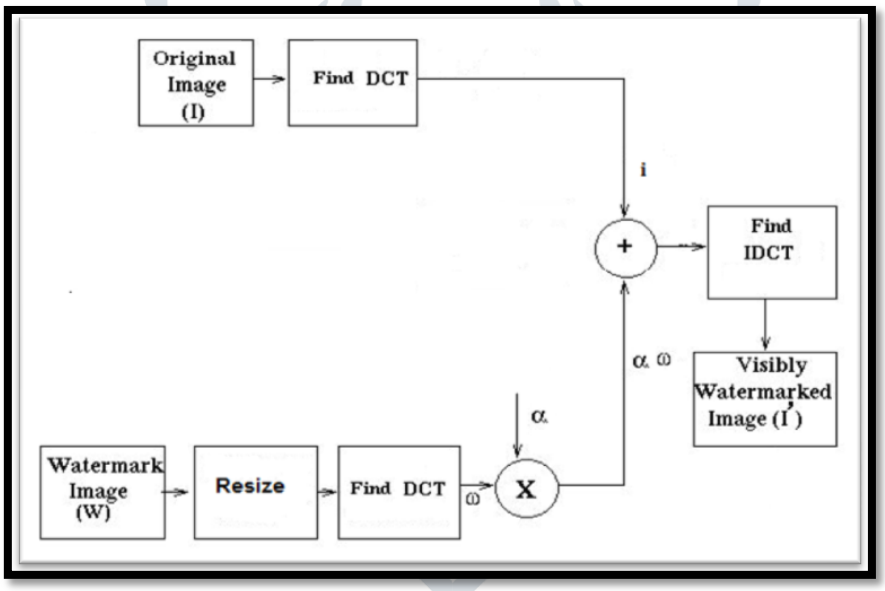


Figure 1: **Watermark system in DCT**

## IV. FFT:

A fast Fourier transform (FFT) is an algorithm to compute the discrete Fourier transform (DFT) and it's inverse. Fourier analysis converts time (or space) to frequency and vice versa. The Fourier Transform is an important image processing tool which is used to decompose an image into its sine and cosine components. The output of the transformation represents the image in the *Fourier* or frequency domain, while the input image is the spatial domain equivalent. In the Fourier domain image, each point represents a particular frequency contained in the spatial domain image [6].

Steps in FFT Block Based Watermarking Algorithm:

1. The original image I (to be watermarked) and the watermark image W are reading. (Both the images may be not of equal size).
2. The watermark image resize if necessary to make it size the same of host image.
3. The FFT coefficients for host image and watermark image are found out.
4. The value of embedding factor defined to be suitable for visible watermarking.
5. The FFT coefficient of the host image and watermark image is modified using the following equation. The IFFT of modified coefficients give the watermarked image.

$$I_{w\,i,j} = I_{i,j} + \alpha\, w_{ij}\,, \qquad i,j = 1,\ldots,n$$

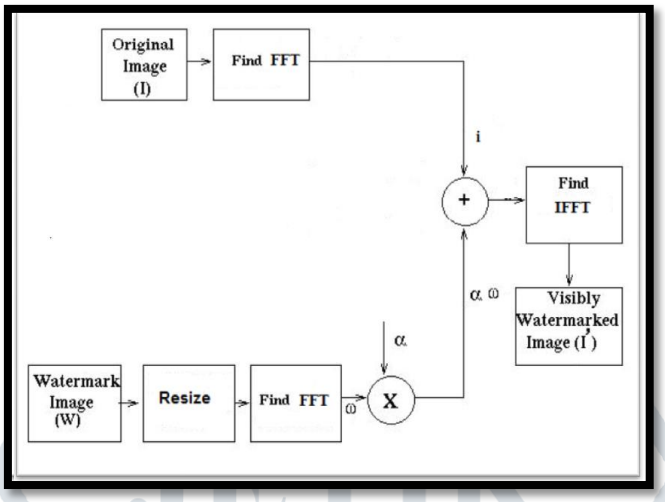


Figure 2 : **Watermark system in FFT**

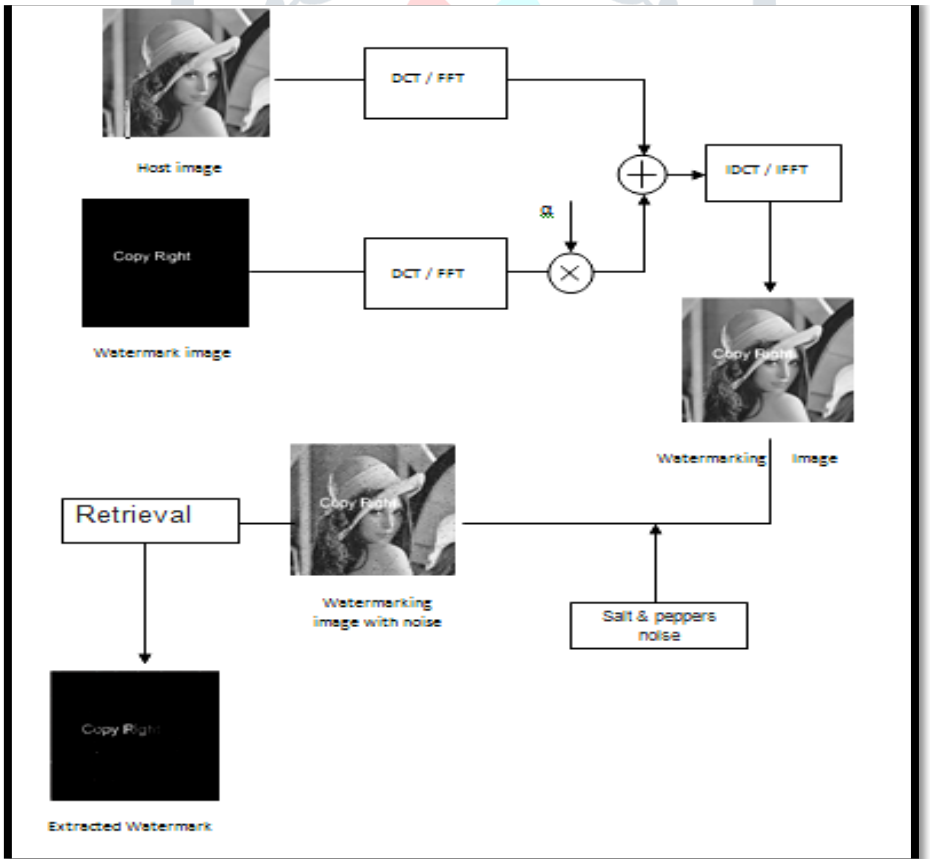


Figure 3 : **Insertion and Retrieval of Watermark**

## V. DWT:

DWT based watermarking schemes follow the same guidelines as DCT based schemes, i.e. the underlying concept is the same; however, the process to transform the image into its transform domain varies and hence the resulting coefficients are different.

Wavelet transforms use wavelet filters to transform the image. There are many available filters, although the most commonly used filters for watermarking are Haar Wavelet Filter, Daubechies Orthogonal Filters and Daubechies Bi-Orthogonal Filters [4].

Each of these filters de-composes the image into several frequencies. Single level decomposition gives four frequency representations of the images. These four representations are called the LL, LH, HL, HH sub-bands.

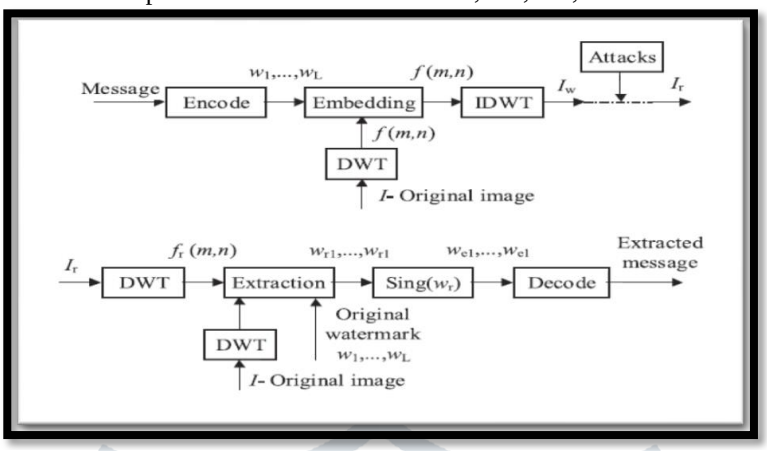


Figure 4 : **Watermark system in DWT**

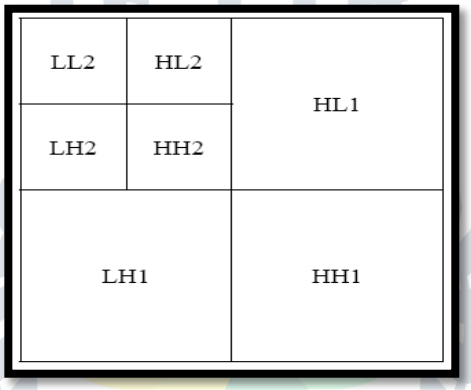


Figure 5 : **DWT decomposition with two levels**

The proposed watermarking system is given in the following process:

**Embedding watermarking**

**Input:** Cover image, watermark image.
**Process:**
1. using two-dimensional separable dyadic DWT, obtain the first level decomposition of the cover image *I*.
2. Modify the DWT coefficients in the LL band:

$$LL_{w\,i,j} = LL_{\,i,j} + \alpha_k w_{ij}\,, i, j = 1, \dots, n$$

3. Apply inverse DWT to obtain the watermarked cover Image, *Iw*.

**Output:** Watermarked image.
**Extracting watermarking**
**Input:** Watermarked cover image.
**Process:**
1. using two-dimensional separable dyadic DWT, obtain the first level decomposition of the watermarked (and possibly attacked) cover image $I_w^*$ .
2. Extract the binary visual watermark from the LL band:

$$w_{ij} = (LL_{w,ij} - LL_{ij})/\alpha$$

**Output:** watermark image.

## VI. RESULT:

1. LSB Encoding Method:

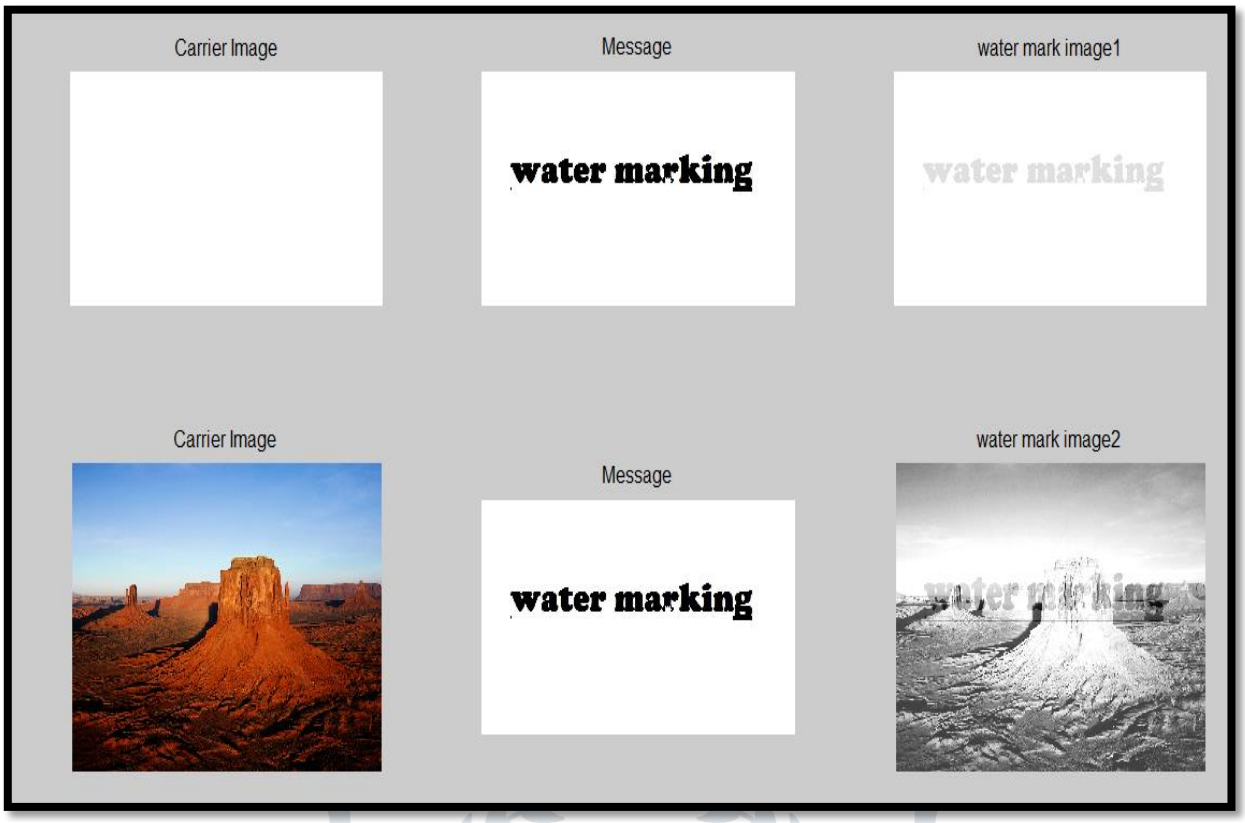


Figure 6 : Two methods of LSB watermarking

2. DCT Method:

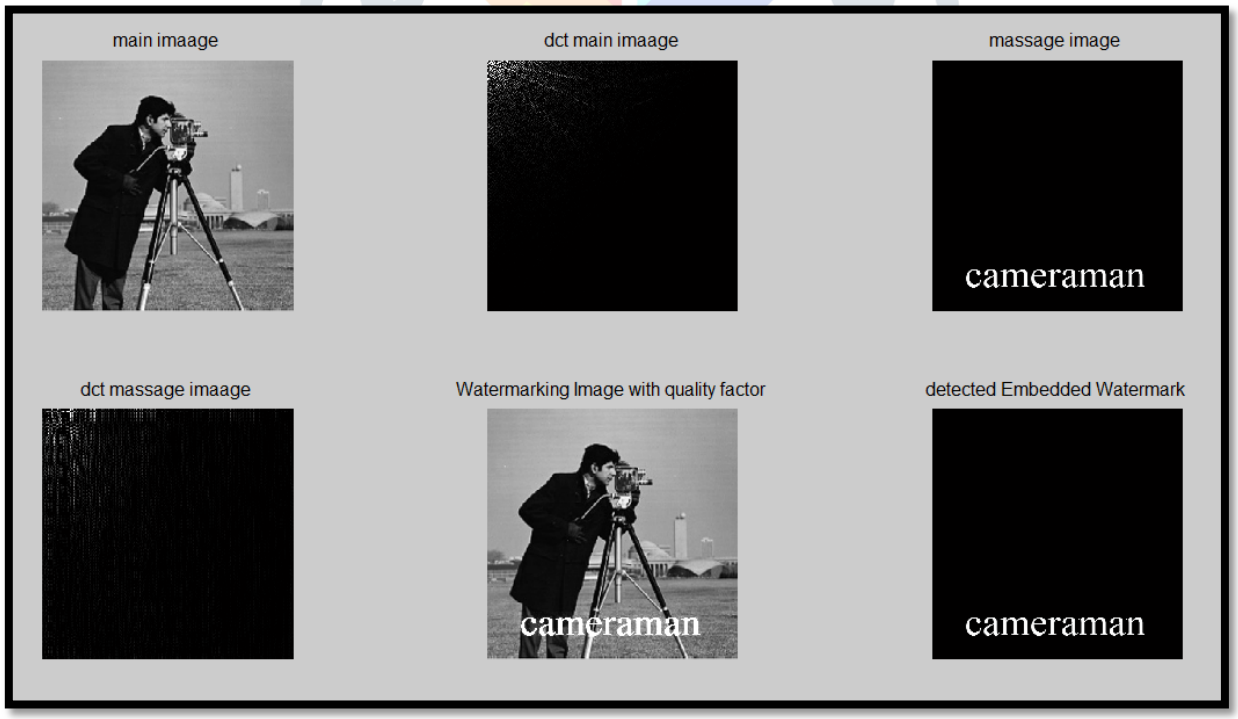


Figure 7

3. DWT Method:

a. Carrier Image And Message Image

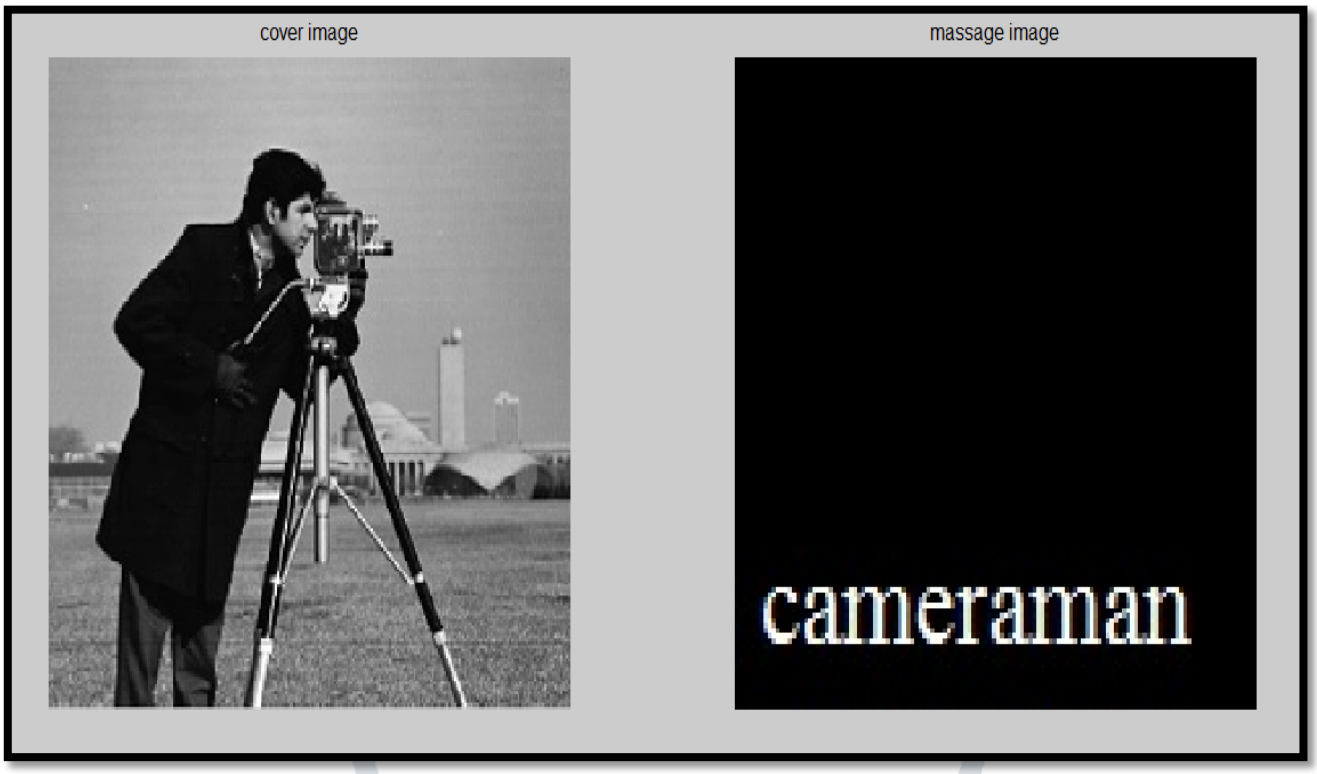


Figure 8:DWT main and massage image

b. DWT of main cover image get partition into 4 parts as

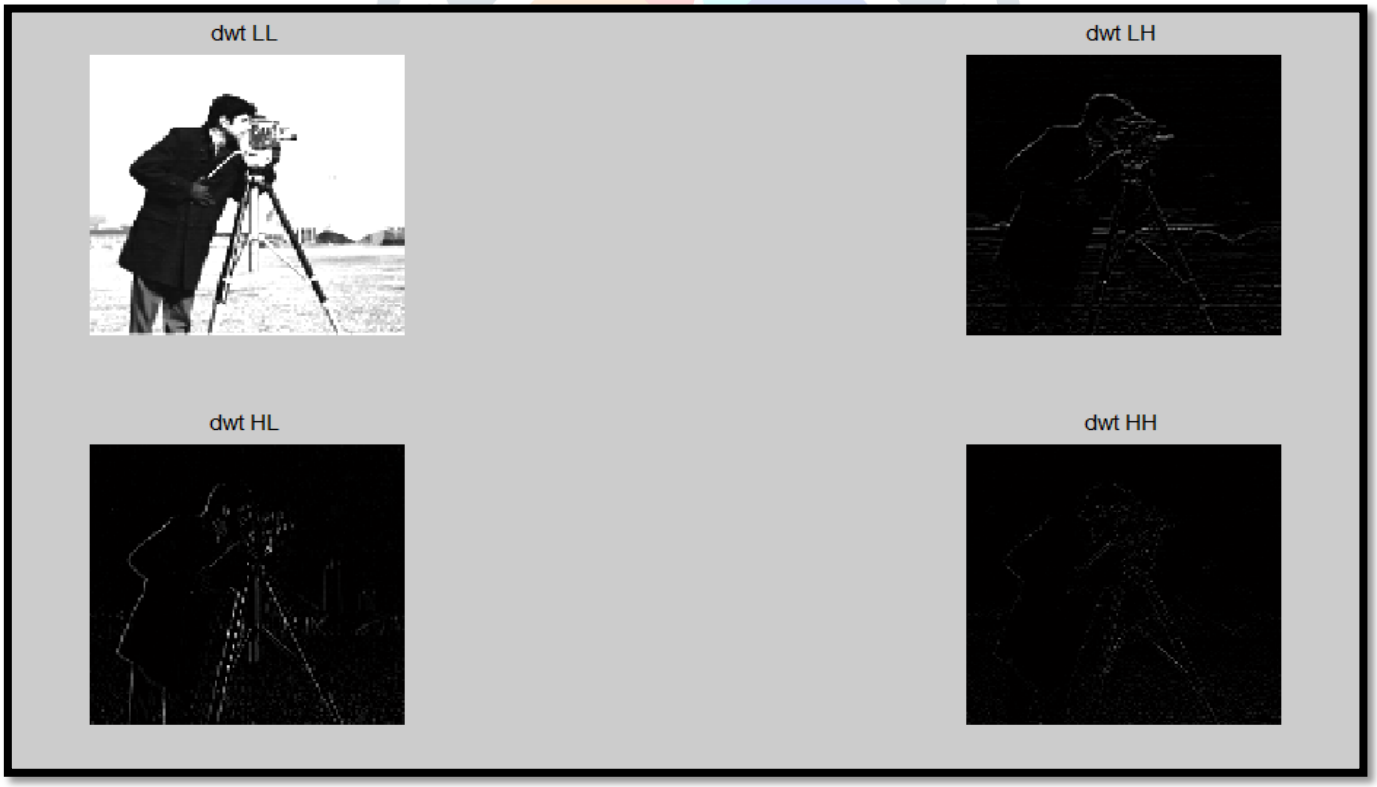


Figure 9: four parts of DWT of main image

c. Watermarking Image using DWT


Figure 10 : DWT watermarking and extracted output

d. FFT Method:

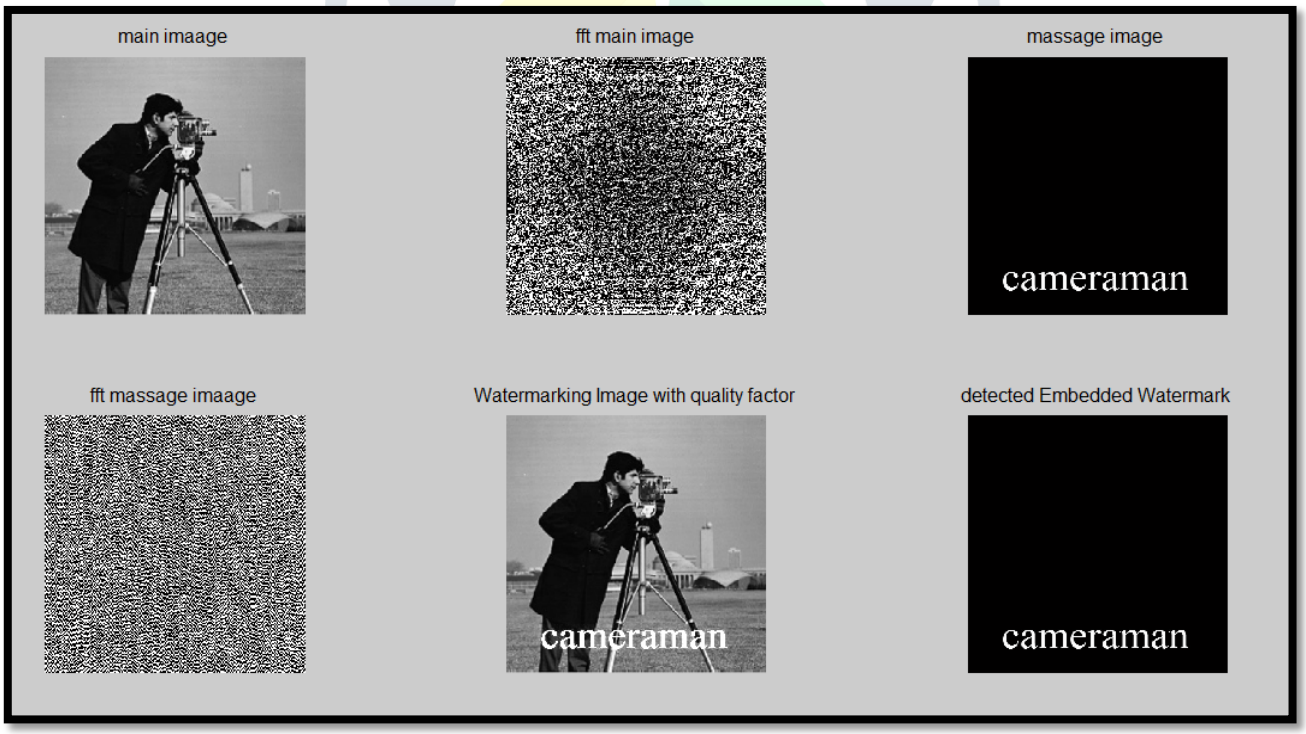


Figure 11 : FFT Method

## VII. CONCLUSION

This paper has successfully discussed and implemented various techniques for the Digital Image Watermarking such as LSB Encoding, DCT, DWT, and FFT etc. We simulate each method and gives output corresponding with process. In DWT method we use alpha factor as 0.8 and in DCT, FFT alpha as 10 and all three method uses 100% quality factor. The Digital Image Watermarking techniques are very impressive for image authentication or protection for attacks. In this paper we tried to give the complete information about the Digital Image Watermarking which will help the new researchers to get the maximum knowledge in this domain.

## V III. REFERENCES

[1] I.J Coxetal, "*Digital Watermarking and Steganography*" (Second edition), Morgan Kaufmann, 2008.
[2] Ali Al-Haj, *"Combined DWT-DCT Digital Image Watermarking".*
[3] Lin Liu, "*A Survey of Digital Watermarking Technologies".*
[4] Amal Haj Ali and Maleka Hahan , *"Digital Image Watermarking"*.
[5] Rafael C.Gonzalez and Richard E.woods, "*Digital Image Processing*".
[6] Strang, Gilbert "*Wavelets*", American Scientist, October 2013.