ADAPTIVE TRAFFIC SIGNAL CONTROL AND DETECTION OF VEHICLE VIOLATING THE TRAFFIC RULE

[1]PROF: P.S. BIBWE, [2]POSTE AMIT A., [3]JAGTAP AMIT R., [4]KASTURE SANGAMESHWAR V.
[1]Assistant Professor in Electronics Department, PREC Loni,
[2, 3, 4] Student of B.E.Electronics in PREC Loni.

ABSTRACT: - As activity flag innovations keep on growing around the world. This venture proposes an ongoing multi-vehicle identification and following methodology. Path marker location is done for vehicle moving on every path. It likewise evacuates the forefront clamor and shadow. This approach is adaptable to most expressway observation video. A few expressway observation recordings are utilized to assess the execution of the activity reconnaissance framework. The proposed approach is contrasted and the standard blob following. The mechanized toll gathering framework utilizing uninvolved Radio Frequency Identification (RFID) tag develops as a persuading answer for the manual Traffic fine accumulation strategy.

INTRODUCTION:

As activity flag innovations keep on growing around the world. This venture proposes an ongoing multi-vehicle identification and following methodology. Path marker location is done for vehicle moving on every path. It likewise evacuates the forefront clamor and shadow. This approach is adaptable to most expressway observation video. A few expressway observation recordings are utilized to assess the execution of the activity reconnaissance framework. The proposed approach is contrasted and the standard blob following. The mechanized toll gathering framework utilizing uninvolved Radio Frequency Identification (RFID) tag develops as a persuading answer for the manual Traffic fine accumulation strategy utilized at movement flag. Time and proficiency involve need of present day. Keeping in mind the end goal to conquer the real issues of vehicle blockage and time utilization RFID innovation is utilized. RFID peruser settled at zebra crossing at movement flag (or even a hand held peruser at manual path, on the off chance that RFID labeled vehicle) peruses the label appended to the vehicle. The protest discovery sensor in the peruser distinguishes the approach of the approaching vehicle's tag and toll finding happens through a prepaid card doled out to the concerned RFID tag that has a place with the proprietors' record. This makes tollgate exchange more helpful for people in general utilize.

LITERATURE REVIEW:

*1.Harpal Singh, **Krishan Kumar, ***Harbans Kaur" Traffic administration is the basic issue of the street. Movement lights assume a vital part in the activity administration. The current activity lights take after the foreordained arrangement. So these lights are called static movement lights. These movement lights are not proficient to tally the quantity of vehicles and the need of the vehicles on convergence point. Accordingly a few vehicles need to hold up even there is no activity on the opposite side. The vehicles like Ambulance and Fire Brigade are additionally stuck in movement and waste their profitable time. The proposed framework gives nature of administration to Emergency vehicles and enhances the precision of Automatic Traffic Light Violation Detection framework and in addition follows out the stolen vehicles utilizing RFID."

2. Pranoti Salunke1, Poonam Malle2, Kirti Datir3, Jayshree Dukale" ATCS is an Automated Toll Collection System utilized for gathering charge naturally. In this we do theidentification with the assistance of radio recurrence. A vehicle will hold a RFID tag. This tag is only one of a kind ID number alloted. This will be doled out by RTO or movement representing specialist. As per this number we will store, all essential data and in addition the sum he has paid ahead of time for the TOLL gathering. Peruser will be deliberately set at toll accumulation focus. At whatever point the vehicle passes the toll naka, the expense sum will be deducted from his prepaid adjust. New adjust will be redesigned. Incase on the off chance that one has lacking equalization, his redesigned adjust will be negative one. To handle this issue, we are disturbing a sound, which will alarm the specialist that this vehicle doesn't have adequate adjust and that specific vehicle can be caught. As vehicles don't need to stop in a line, it guarantees efficient, fuel protection and furthermore contributing in sparing of cash."

BLOCK DIAGRAM OF SYSTEM:-

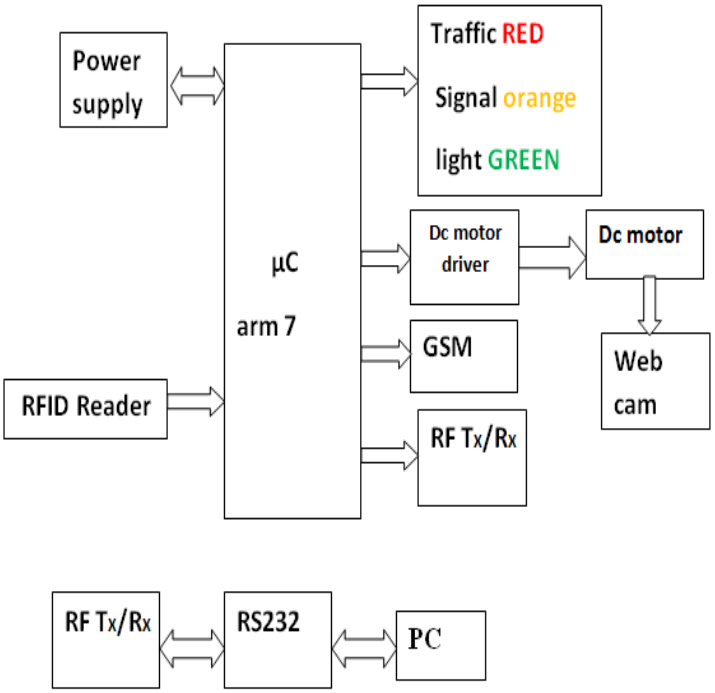

Fig2.1 Block diagram of system

WORKING OF BLOCK DIAGRAM:

Each vehicle in city should take after the path decipline. Numerous vehicles break the principles by entering the BRT path which is held for City transports and State transport vehicles. Step by step Many wrongdoers infringe upon the law since they are undetected and not fined. We have concocted a Solution in which we can recognize and group the vehicle as well as illuminate the RTO experts in time so that the guilty parties can be fined. Webcam is utilized to recognize thickness of vehicle on street and as indicated by the thickness activity flag is controller

MICROCONTROLLER UNIT:

The µC is a ultimate choice making body on the framework. The rationale is created and after that the program is singed inside the microcontroller and alternate peripherals are gotten to by means of microcontroller as it were. The ARM7TDMI-S is a universally useful 32-bit chip, which offers superior and low power utilization.

RFID READER:

All together for a RFID framework to capacity, it needs a peruser, or checking gadget, that is able to do dependably perusing the labels and imparting the outcomes to a database. A peruser utilizes its own recieving wire to speak with the tag. At the point when a peruser communicates radio waves, all labels assigned to react to that recurrence and inside range will react. A peruser additionally has the capacity to speak with the tag without an immediate viewable pathway, contingent upon the radio recurrence and the kind of label (dynamic, inactive, or semi uninvolved) utilized. Perusers can prepare different things on the double, taking into account expanded read handling times. They can be portable, for example, handheld gadgets that sweep objects like beds and cases, or stationary, for example, purpose of-offer gadgets utilized as a part of grocery stores.

This Unit is put at the passage of BRT course which will ceaselessly detects vehicles. peruser is associated with movement single is. After picture handling, for example, territory, Edge location and so forth .we can decide the range of vehicle utilizing pixel number and as needs be decide the weight class. On the off chance that the vehicle is break the movement leads wrong then, we can send the sign to ARM7 through Rs232.

RFID Tag:

A RFID tag, or transponder, comprises of a chip and a reception apparatus. A chip can store a one of a kind serial number or other data in light of the label's sort of memory, which can be perused just, perused compose, or compose once read-many(WORM). The recieving wire, which is joined to the microchip, transmits data from the chip to the peruser. Commonly, a bigger radio wire demonstrates a more extended read go. The tag is connected to or inserted in a question be recognized, for example, an item, case, or bed, and can be examined by portable or stationary perusers utilizing radio waves.

ALGORITHM:

1. Start
2. Initialization
3. Check traffic
4. YES. Then give red signal and go to step 6
5. NO. then give green signal
6. Activated RFID reader
7. Detect the car, YES go to next step
8. Send information to user, your car is detected
9. Repeat infinite time

FLOWCHART:

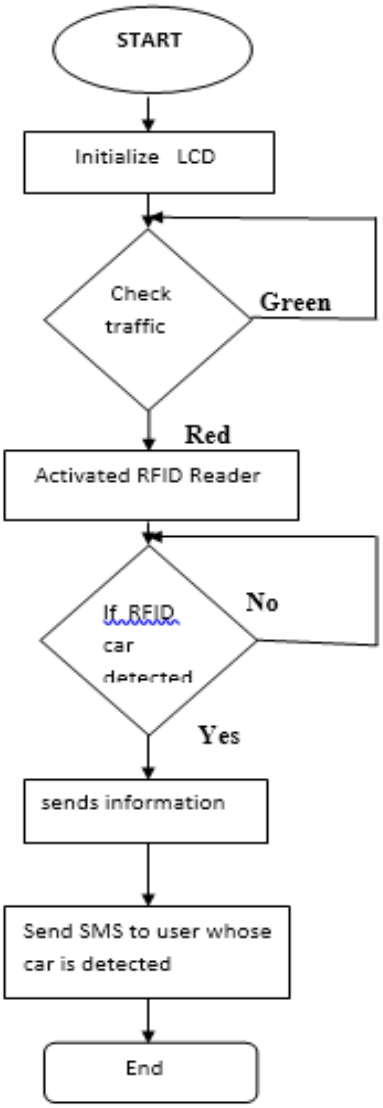

Fig. flowchart of the system

ADVANTAGES:

1. Less time delays
2. Quick response time
3. Fully automate system
4. Robust system
5. Low power requirement
6. Nondestructive

APPLICATIONS:

1. Signaling system
2. Parking system
3. Toll system

CONCLUSION

This venture proposes an ongoing multi-vehicle identification and following methodology and the manual Traffic fine accumulation strategy utilized at movement flag utilizing RFID. RFID peruser settled at zebra crossing at activity flag peruses the label joined to the vehicle. The protest location sensor in the peruser recognizes the approach of the approaching vehicle's tag. fine reasoning happens through a prepaid card appointed to the concerned RFID tag that has a place with the proprietors' record.

REFERENCES:

[1] VeenaDivya K member IACSIT ,AyushAkhouri, Chandan Kumar, "A Real time implementation of a GSM based Automated Irrigation Control System using Drip Irrigation Methology International Journal of Scientific & Engineering Research, Volume 4, Issue 5, May 2013 ISSN 2229-5518

[2] In R.Suresh, S.Gopinath, K.Govindaraju, T.Devika, N.SuthanthiraVanitha5 "GSM based Automated Irrigation Control using Raingun Irrigation System" International Journal of Advanced Research in Computer and Communication Engineering.

[3] Purnima, S.R.N. Reddy, PhD. Proposed a "Design of Remote Monitoring and Control System with Automatic Irrigation System using GSM-Bluetooth "(International Journal of Computer Applications (0975 – 888) Volume 47– No.12, June 2012)

[4] ChandrikaChanda, SurbhiAgarwal Proposed scheme "A Survey of Automated GSM Based Irrigation Systems" (ISSN 2250-2459, Volume 2, Issue 10, October 2012)

[5] N. Shah and I. Das, "Precision Irrigation Sensor Network Based Irrigation", a book on Problems, Perspectives and Challenges of Agricultural Water Management, IIT Bombay, India, pp. 217–232, April 2008

[6] Fangmeier, D. D., Garrot, D. J.,Mancino, C.F and Husman, S. H., "Automated irrigation systems using plant and soil sensors", American Society of Agricultural Engineers, ASAE Publication, 1990, pp. 533-537.

[7] Benzekri, A., Meghriche, K., and Refoufi, L., PC-based automation of a multi-mode control for an irrigation system Proceedings of International symposium on industrial embedded systems, Lisbon, July 2007, pp. 310-315.

[8] PILLI RAJENDER1, M. SRINIVAS2 1PG Scholar, Dept of ECE, Vishnu Sree Institute of Technology, Nalagonda, JNTUH, TS, India, Email:prajender118@gmail.com. 2Assoc Prof, Dept of ECE, Vishnu Sree Institute of Technology, Nalagonda, JNTUH, TS, India,

[9] E-mail: manikyala_srinivas@yahoo.com." Smart Agriculture Control System using Mobile"