STATCOM MANAGEMENT PARAMETER ON VOLTAGE TRANSFER IMPROVEMENT IN TERM OF ENERGY: A REVIEW

[1]Yogya Diwedi, [2]Dr. Sameena Elyas Mubeen
[1]M-Tech Scholar, [2]Head of Department
[1,2]Department of Electrical Engineering, REC, Bhopal

ABSTRACT- With the speedy development and improvement of power natural philosophy devices in past decades dynamic the state of affairs within the field of dominant and rising the facility quality problems and connected issues terribly considerably. FACTS devices are the great samples of these. thus during this paper one FACTS device referred to as STATCOM a robust shunt controller, for discussing its impact and depth the way to improve the facility quality by reviewing the past literature printed on the varied sorts and configurations of STATCOM using totally different techniques and configurations so as to reduces harmonics and improved dynamic performance. A review is finished on the past literature printed on the varied sorts and configurations of STATCOM typically current supply electrical converter based mostly or voltage supply electrical converter based.

KEYWORDS: STATCOM, SVC, IGCT, IGBT, ATC

I. INTRODUCTION

Today's power systems are evolving from a relative static operation situation to a lot of dynamic one because of the presence of electricity markets, the deep impact of renewable and distributed generation and different drivers that introduce a lot of variability and uncertainty within the operation of the ability system. For instance, below the electricity market operation, things exist wherever the generation and consumption results coming back from the market are restricted by power transmission security and cargo ability constraints. Versatile AC Transmissions Systems (FACTS) were first off developed within the 1990's [1]. FACTS devices will facilitate to alleviate transmission congestions however conjointly different facility issues, that create this technology to be more and more taken into consideration by TSOs. Additionally, it is same that this technology has reached maturity which the price of those power electronics based mostly solutions has significantly attenuated. However, because the investment value of FACTS remains high, their optimum location within the facility could be a crucial issue. Therefore, many FACTS location ways considering facility improvement techniques are developed within the last years.

Developing countries particularly will apply versatile voltage regulation and system Stabilization measures, so as to utilize a lot of effectively the latent capability in existing transmission networks, in preference to committing larger resources to new overhead lines and stations. The employment of power electronics within the kind of Thyristor Controlled Reactors(TCR) and Thyristor Switched Capacitors (TSC) in a very Static volt-ampere Compensator (SVC) is well established. The appliance of power electronics in new configurations of FACTS offers the likelihood of meeting such demands. FACTS devices are habitually utilized so as to boost the ability transfer capability of the otherwise underutilized elements of the interconnected network. The Static Synchronous Compensator (STATCOM) victimization GTOs (Gate-Turn-off Thyristors) could be a principal state-of the- art FACTS instrumentality and is currently a commercially obtainable further tool to be used by system planners and designers [2, 3] for shunt reactive power compensation in transmission and distribution systems. Like all static FACTS devices the STATCOM has the potential to be exceptionally reliable however with the ad-scititious capability to: sustain reactive current at low voltage (constant current not constant impedance), cut back land use and increase re-location ability (footprint four-hundredth of SVC) and, be developed as a voltage and frequency support (by substitution capacitors with batteries as energy storage). Though presently being applied to manage transmission voltage to permit larger power flow in a very voltage restricted transmission network within the same manner as a static volt-ampere compensator (SVC), the STATCOM has additional potential. By giving an inherently quicker response and larger output to a system with a depressed voltage, the STATCOM offers improved quality of offer.

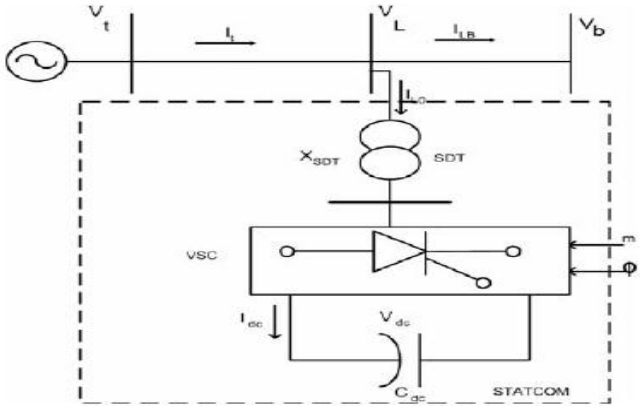

Figure 1– Basic interfacing of STATCOM with transmission line

II. DEFINITION OF STATCOM

The STATCOM is largely a DC-AC voltage supply device with associate energy storage unit, typically a DC electrical condenser. It operates as a controlled Synchronous Voltage supply (SVS) connected to the road through a coupling electrical device. Figure 1 shows the schematic configuration of STATCOM. The controlled output voltage is maintained in section with the road voltage, and may be controlled to draw either electrical phenomenon or inductive current from the road in an exceedingly similar manner of a synchronous condenser, however way more chop-chop. Compared to SVC and different standard reactive power compensators, STATCOM has many blessings listed below. STATCOM incorporates a dynamic performance so much prodigious the opposite power unit compensators. The system latent period of STATCOM will reach 10ms or less. STATCOM has the power to take care of full electrical phenomenon output current at low system voltage that additionally makes it more practical than SVC in up the transient stability. Simulations indicate that 1.3Mvar SVC and 1 M power unit STATCOM have similar effects in maintaining dynamic voltage stability. STATCOM has abundant larger operational vary as compared therewith of SVC. Compared with SVC, STATCOM will simply understand redundancy style that brings a better responsible ness. IGCT, IGBT, utilized in STATCOM, need less complicated gate drives and snubber circuits, and additionally build STATCOM a lot of reliable. STATCOM incorporates a smaller installation area, concerning five hundredth of that for SVC. The STATCOM of Alstom and Mitsubishi are created relocatable, with an influence density of one M var/m3. the most objective of STATCOM is to get associate nearly harmonic neutralized and controlled three-phase AC output voltage waveforms at the purpose of common coupling (PCC) to control reactive current flow by generation and absorption of governable reactive power by the solid-state switch rule.

The P-Q relation of STATCOM is found by following equation

$$S = \frac{3VsVc}{X}\sin\alpha - j3\left(\frac{VsVc}{X}\cos\alpha - \frac{Vs^2}{X}\right) = P - jQ$$

Where S is the apparent power flow, P the active power flow, Q the reactive power flow, Vs the main AC phase voltage to neutral (rms), Vc the STATCOM fundamental output AC phase voltage (rms), X is the leakage reactance, L the leakage inductance, f the system frequency and α is the phase angle between Vs and Vc.

III. LITERATURE SURVEY

In 2015 Elsevier Ravinder Kumar et al. [19] presented an article. In this article proposed, Flexible AC Transmission Systems devices are getting the imperative a part of the transmission network for power transfer improvement. During this work, the impact of Static Compensator parameters has been analyzed for accessible transfer capability (ATC) improvement.

<u>The main contribution of the paper is:</u>

i. Impact of STATCOM on the ATC determination for bilateral and multi-transactions
ii. Comparison of ATC values obtained in 3 totally different situations of STATCOM control parameters variations
iii. Comparison of results while not and with STATCOM controller parameters for the ATC improvement. The study has been conducted on IEEE twenty four bus dependableness check System.

In this paper, the result of STATCOM management parameters has been assessed on the ATC upgrade. The outcomes are non-heritable to look at the result on the ACPTDFs and Power flows within the system. It's ascertained that:

- The ATC enhances with STATCOM for all transactions and cases underneath the study.
- The ATC varies linearly with the modification in voltage management parameters of STATCOM.
- The ATC varies nonlinearly with the modification in STATCOM management angle.

The impact of angle variation on the ATC is additional predominant compared to vary within the angle of STATCOM. This study is very important for higher designing and operation of energy markets and might facilitate the ISO to post ATC on net for economic enterprise within the energy markets.

In 2015 IEEE J. Jayachandran et al. [20] proposed a paper. In this paper proposed, Distribution static compensator (DSTATCOM) is that the optimum alternative of power quality (PQ) compensator during a three-phase four-wire distribution system for the mitigation of PQ issues. The performance of the PQ compensator below varied load and non-ideal supply conditions depends on the management strategy. A neural network-based p-q management algorithmic rule is projected during this paper for the DSTATCOM that includes of a four-leg voltage-source convertor with a dc capacitance. The projected management strategy implements 5 artificial neural network controllers for, the conversion of non-ideal voltage supply into ideal curved voltage, the extraction of dc element p of load real power provided to the load, maintenance of the voltage across the capacitance, and mitigation of neutral current.

In 2015 IEEE Juan Shi et al. [21] proposed a paper. In this paper proposed, Distribution power grid has poor power quality and dynamic performance attributable to low reactive power support throughout disturbances. Distribution Static Compensator (DSTATCOM) will improve the facility quality and dynamic performance of distribution power grid. Proportional and Integral (PI) controllers are usually accustomed control the operation of the DSTATCOM for the distribution power grid. However, since the facility system is very nonlinear and subject to varied disturbances, the PI controlled DSTATCOM cannot offer optimum performance for various in operation points. Additional strong controllers like the one supported formal logic approach are needed for the DSTATCOM to supply adequate dynamic voltage control and to boost power quality and stability of the distribution installation. This paper presents the planning of a formal logic primarily based controller of a 3MVA DSTATCOM for up the facility quality and stability of a distribution installation. Grey Wolf improvement (GWO) algorithmic rule has been accustomed tune the scaling factors of the formal logic controllers. Comparison study of PI controlled and formal logic controlled DSTATCOM for up the facility quality and dynamic performance of a distribution installation is simulated victimization Sim installation in MATLAB/Simulink surroundings. The performances of the DSTATCOM controllers are evaluated throughout grid facet voltage sag and cargo variation. The simulation leads to MATLAB/Sim Power Systems show that the formal logic controlled DSTATCOM controller provides higher system dynamic response and thus improves power quality and stability for the distribution installation.

In 2015 IEEE Chetan W. Jadhao et al. [22] proposed a paper. In this paper proposed, Day by day, as a result of increase in load, fashionable facility becomes terribly advanced in nature, as a result of this facility moon-faced with downside like; power flow, system stability, system security etc. currently it's accepted that power transmission and distribution is become huge downside. The power flow through cable may be operate of line resistance, magnitude and point in time. If these parameters are often controlled, the facility flow through the cable are often controlled in an exceedingly planned manner. This downside are often overcome by the used of versatile AC gear mechanism (FACTS) devices, their primary application is to reinforce power transfer capabilities, facility stability and permit a lot of versatile management of power flow. Here the FACTS device used is Static volt-ampere Compensator (SVC). Except for economical operation of SVC, the best placement of SVC is crucial and this issue are often mapped out with the employment of sensitivity indices analysis methodology. Here reduction of total system reactive power loss sensitivity indices methodology is enforced. IEEE-14 bus system is employed here for the study purpose. To work out sensitivity indices for planned methodology 'MATLAB' software package is employed here.

In 2014 IEEE Juan Shi et al. [23] proposed an article. In this article proposed, Proportional and Integral (PI) controllers are typically accustomed control the operation of the Distribution Static Compensator (DSTATCOM) for the distribution power grid. However, since the facility system is very nonlinear and subject to numerous disturbances, the PI controlled DSTATCOM cannot offer best performance for various in operation points. Additional strong controllers like those supported formal logic approach are needed for the DSTATCOM to supply adequate dynamic voltage control and to boost power quality and stability of the distribution power grid. This paper presents the look of formal logic Controllers (FLC) of a DSTATCOM for rising power quality for a distribution power grid. The scaling factors of the designed FLC are optimized exploitation Genetic Algorithms (GA). The GA optimized FLC for the DSTATCOM used for rising power quality and dynamic performance of a distribution power grid is compared with a DSTATCOM controlled by PI controllers. The performances of the DSTATCOM controllers are evaluated throughout grid-side voltage and huge load variations of the distribution power grid. Simulation results show that the DSTATCOM with the GA optimized FLC will improve the facility quality and dynamic performance of distribution power grid and supply higher system dynamic performance than the DSTATCOM with the traditional PI controllers.

In 2013 Chao Shun Chen et al. [24] proposed an article. In this article proposed, The PV penetration level of a distribution system is usually restricted by the violation of voltage variation caused by giant intermittent power generation. This study investigates the employment of a distribution static compensator (DSTATCOM) in reactive power compensation for system voltage management, throughout peak star irradiation, so as to extend the PV installation capability of a distribution feeder and avoid the voltage violation downside. PV power generation is simulated exploitation hourly star irradiation and temperature knowledge provided by the administrative body. The voltage variation at the purpose of common coupling (PCC) is additionally derived by death penalty the 3- load flow analysis to see the most PV power injection while not inflicting voltage violation. By applying the projected voltage management theme of DSTATCOM throughout high star irradiation periods, the full power generation and also the total energy delivered by the PV system over one year are determined per the annual period of star irradiation. The annual sales of PV power, the system O & amp; M price, the value of DSTATCOM installation and also the initial capital investment for a PV system are then wont to calculate the income over the system life-cycle and also the final internet gift value (NPV) of the PV project. With the projected DSTATCOM voltage management to perform reactive power compensation, the optimum installation capability of PV systems is determined by maximizing cyber web present worth of the system to confirm the simplest cost-effectiveness of the PV project and to higher utilize alternative energy.

IV. CIRCUIT TOPOLOGY

There are mainly two types of STATCOM main circuit configurations: multi pulse converter, multilevel converter [4-5]. In the multi pulse converter, the 3-phase bridges are connected in parallel on the DC side, as shown in Fig. 2. The bridges are magnetically coupled through a zigzag transformer, and the transformer is usually arranged to make the bridges appear in series viewed from the AC sides. Each winding of the transformer is phase-shifted to eliminate selected harmonics and produce a multi pulse output voltage. Pulse Width Modulation (PWM) can be applied to improve the harmonics content, at the expense of higher switching and snubber loss, plus reduced fundamental var rating. The disadvantages of multi pulse converter configuration are: the phase-shift transformer makes the system complex and bulky; there will be a unique transformer design for each STATCOM installation. Compared to the multi pulse converter based STATCOM multilevel converters are more flexible and have a wide application. They can be used as active power filters and to handle unbalanced loads. No phase shift transformer is required in this configuration, so a lower investment cost, plus a lower power loss, can be expected. The multilevel converter configuration can be further classified into three different configurations:

1) Diode-clamped converter, [6]
2) Flying capacitor converter,
3) Cascade converter.

The concept of the cascade multilevel converter is put forward by Fang Zheng Peng in 1996 [7-8]. A cascade converter is constructed by standard H-bridges in series. Each H-bridge converter unit provides three voltage levels (-U+ 0, U). A single phase STATCOM based on this configuration is shows in Figure 2, 3 and 4 is a typical output waveform of a three level cascade converter.

Compared with the other two multilevel configurations and the multi pulse converter, the cascade converter eliminates clamping diodes, flying capacitors, or the bulky zigzag transformer, and so requires least component mounts, and the modularity of this configuration makes it much easier to implement converters with a large number of levels. Larger dc side capacitors are required compared to the diode clamped and flying capacitor converter under balanced condition but it provides separate phase control to support significant voltage unbalance.

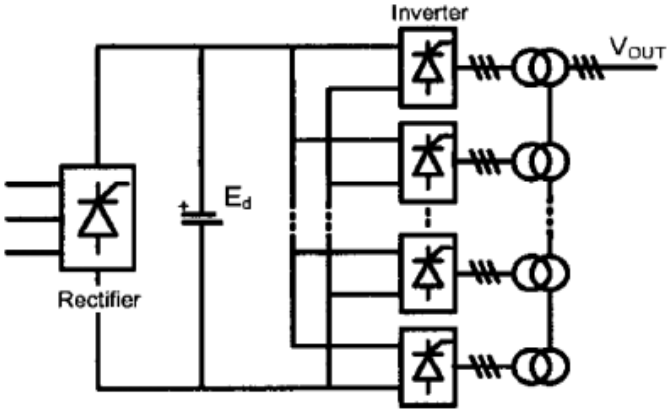

Figure. 2 Multi pulse converter diagram

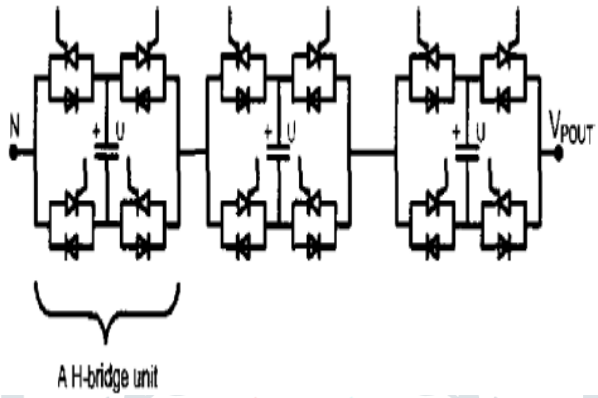

Figure 3 Cascade multilevel converter diagram

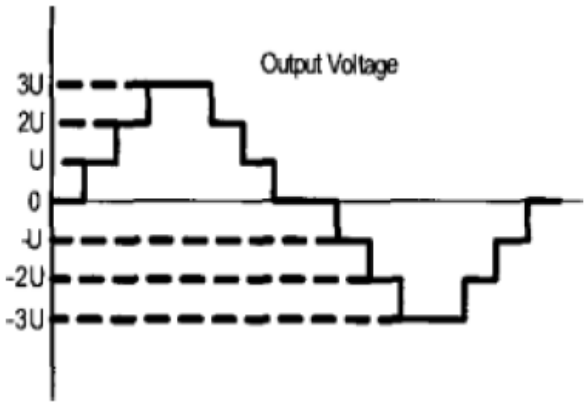

Figure 4 Typical output voltage waveform of a three level cascaded converter.

V. CONTROL STRATEGIES AND APPROCHES

The system is that the heart of progressive STATCOM controller for dynamic control of reactive power in electrical system. Supported the operational necessities, variety of applications, system configuration and loss improvement, essential management parameters are controlled to get desired performance and lots of control methodologies in STATCOM power circuits are conferred in [9-11]. In an exceedingly square-wave mode of operation, phase control (α) across the escape electrical phenomenon (L) is that the main dominant parameter. This management is used in an exceedingly 2 level convertor structure, wherever DC voltage (Vdc) is dynamically adjusted to higher than or adequate or below the system voltage for reactive power management. In an exceedingly three-level configuration, the dead-angle or zero-swell amount (β) is controlled to vary the convertor AC output voltage by maintaining Vdc constant. The system for STATCOM operated with PWM mode employs management of α and m (modulation index) to vary the convertor AC voltages keeping Vdc constant. For voltage regulation, 2 management-loop circuits' specifically inner current management loop and external/outer voltage control loop are used in STATCOM power circuit. For voltage regulation, 2 management-loop circuits' specifically inner current management loop and external/outer voltage control loop are used in STATCOM power circuit. The present management loop produces the required point distinction of the convertor voltage relative to the system voltage and successively, generates the gating pulses, whereas the voltage management loop generates the reference reactive current for the present controller of the inner control loop. This management philosophy is enforced with proportional and integral management (PI control) algorithmic rule or with a mixture of proportional (P), integral (I) and by-product (D) management algorithmic rule in d–q synchronous rotating frame.

The general mathematical approach, modelling and style of management systems for compensator circuits are projected in [13-15]. Within the method of planning and implementation of system, acquisition of the many signals is concerned.

Initially, the essential AC and DC voltages and current signals (instantaneous values/vectors) are detected exploitation sensors.

In the next step, these signals are synthesized by techniques like d–q synchronous rotating axis transformation, α-β stationery reference frame of transformation and so on.

VI. EFFECTS ON NO. OF PULSES IN STATCOM PERFORMANCE

Self-commutating GTO devices in VSC technology are wide used as main governable switch component for top power rating compensators, and operated either in square wave or similar square wave mode by means that of GTO triggering once per cycle of elementary power frequency. Within the state of the art dynamic reactive power compensator, use of multi pulse topology beside first harmonic switch control of GTO-VSC could be a mature technique used to attain a detailed to curving AC output voltage from GTOVSCs. during this topology, variety (P) of elementary six-pulse converters undulations are electro-magnetically supplemental to provide a multi-pulse waveform that contains harmonics within the order of 6NP + 1 ,where N=1, 2, 3, 4,...and P=1, 2, 3, 4.. .number of six pulse VSC. For instance, in an exceedingly 4x6-pulse STATCOM, AC voltage output undulation can contain harmonics of the order of23rd, 25th 47th 49th .etc.

In [16] is concentrated on style and modeling of a replacement first harmonic switch based mostly 24-pulse 2-level +100MVAR STATCOM in MATLAB platform for top power applications. solely four 6-pulse elementary Gate shut down voltage supply converters (GTO-VSC) beside single stage geophysical science meeting twin objectives of magnetic summing circuit and coupling electrical device at PCC, and PI-controllers using principle of point management, are sculpturesque to attain associate degree improved performance to manage load voltage in an ac network with doctorate values inside limits.

Multi-pulse GTO based mostly voltage supply convertor (VSC) topology alongside a first harmonic switch mode of gate management could be a mature technology being wide utilized in static synchronous compensators (STATCOMs) is conferred in [17]. High range of pulses within the STATCOM, ideally a 48-pulse besides matching elements of magnetics for dynamic reactive power compensation, voltage regulation, etc. in electrical networks is projected. With a rise within the pulse order, would like of power electronic devices and inter-facing magnetic equipment will increase multifold to attain a desired operational performance.

In [17], a competitive topology with a fewer range of devices and reduced magnetics is evolved to develop an 18-pulse, 2-level 100MVAR STATCOM during which a GTO-VSC device is operated at first harmonic switch gate management. The inter-facing magnetics topology is conceptualized in 2 stages and with this harmonics distortion within the network is reduced to permissible IEEE-519 customary limits.

This compensator is sculpturesque, designed and simulated by a Sim Power Systems tool enclose MATLAB platform and is tested for voltage regulation and power issue correction in power systems. The operational characteristics resembling steady state and dynamic operational conditions show an appropriate performance.

In [18] the dynamic operation of novel management theme for each Static Synchronous Compensator (STATCOM) and Static Synchronous Series Compensator (SSSC) supported a replacement full model comprising a 48-pulse Gate Turn-Off thyristor voltage supply convertor for combined reactive power compensation and voltage stabilization of the electrical grid network is investigated. The STATCOM theme and therefore the electrical grid network are sculpturesque by specific electrical blocks from the facility system block set, whereas the system is sculpturesque exploitation Simulink. 2 novel controllers for the STATCOM and SSSC are conferred during this paper supported a decoupled current control strategy. The performance of each STATCOM and SSSC schemes connected to the 230-kV grid are evaluated. The projected novel management schemes for the STATCOM and SSSC are absolutely valid by digital simulation.

If the no. of pulses are enlarged then the output voltage of the STATCOM becomes more and more curving and harmonics contents within the voltage waveforms decreases.

VII. CONCLUSION

In this analysis, a review of past literature printed on the various management methods of STATCOM is given. During this work, we've found that with the advancement of power electronics converters, the ability engineers notice numerous occasions to develop the management strategy in order that harmonics are reduced as potential. We are able to conjointly see that a construction cascaded multi-pulse STATCOM have found nice applications in nowadays facility .There is an excellent scope for power quality researchers for developing quick adaptive controllers for STATCOM. Totally different configuration of STATCOM has been mentioned. Differing kinds of software system tools which might be used for simulation of STATCOM are been mentioned.

REFERENCES

[1] R. Adapa. “Flexible AC Transmission System (FACTS): System Studies to Assess FACTS Device Requirements on the Entergy System. Electric Power Research Institute. TR-105260. August 1995.

[2] M. R. Iravani, P. L. Dandeo, K. H. Nguyen, D. Zhu, d. Maratukulam, “Applications of static phase shifters in power systems,” IEEE Trans on Power Delivery, Vol 9, No. 3, July 1994, pp. 1600-1608.

[3] A. Kramer, J. Ruff, “Transformers for phase angle regulation considering the selection of On-load tap-changers,” IEEE Trans on Power Delivery, Vol. 13, No.2, April 1998, pp. 518-523.

[4] Solo, D., Grccn. T.C., “A comparison of high-power converter topologies for the implementation of FACTS controllers”, IEEE Trans. on lndustriol Eleclmnic, Volume: 49 Issue: 5 ,Oct. 2002: 1072 -1080

[5] Lee, C.K., Leung, J.S.K., Hui. S.Y.R., Chung, H.S.-H., “Circuit-levcl comparison of STATCOM technologies”, IEEE Trom. on Power Electronics, Volume: 18 Issue: 4, July 2003: 1084 -1092

[6] Chai, N.S., Cho, J.G, Cho, GH., “A general circuit topology of multi l wCI inverter”, PESC ‘91, 22nd Annual IEEE, 24-27 June 1991:

[7] Meynard T.A., Fach, H.,“Multi-level conversion: high voltage choppers and voltagc-source inverted,PESC ‘92 Record, 23rd Annsol IEEE, 29 June-3 July 1992 397 403 vol. l

[8] Fang Zheng Peng, lih-Shcng Lai, Mc Keevcr, J., Van Cacvning. J., “A multilevel voltage-source inverter with sepamtc DC sources for static VAr generatian”, Conference Record of the Thirtieth /AS Annual Meeting, /AS 95, 1995 1EEE , Volume: 3 , 8-12 Oct. 1995: 2541 -2548.

[9] Hanson D.J., Woodhouse M.L., Horwill C., Monkhouse D.R., Osborne M.M.: 'STATCOM: a new era of reactive compensation’, Power Eng. J., 2002, 16, (3), pp. 151– 160.

[10] Kincic S., Chandra A., Babic S.: 'Five level diode clamped voltage source inverter and its application in reactive power
[11] compensation'. IEEE Large Engineering Systems Conf. Power Engineering, LESCOPE, 2002, pp. 86–92.
[12] Soto D., Green T.C.: 'A comparison of high power converter topologies for the implementation of FACTS controllers', IEEE Trans. Ind. Electron., 2002, 49, (5), pp. 1072–1080
[13] Peng F.Z., Wang J.: 'A universal STATCOM with delta connected cascade inverter'. IEEE 35th Annual Power Electronics Specialists Conf., PESC, 2004, vol. 5,pp. 529– 3533
[14] Qingru Q., Chang Y., Wai C.K., Yixin N.: 'Modeling and simulation of a STATCOM system based on 3-level NPC inverter using dynamic phasors'. IEEE PES GM, 2004, vol. 2, pp. 1559– 1564.
[15] Shen D., Liu W., Wang Z.: 'Study on the operation performance of STATCOM under unbalanced and distorted system voltage'. IEEE Power Engineering Society WM 2000, vol. 4, pp. 2630– 2635
[16] Chen H., Zhou R., Wang Y.: 'Analysis of voltage stability enhancement by robust nonlinear STATCOM control'. IEEE PES SM 2000, vol. 3, pp. 1924– 1929.
[17] B. Singh, R. Saha, "A New 24-Pulse STATCOM for Voltage Regulation" IEEE Conference on Power Electronics and Drives, 2007.
[18] B. Singh, R. Saha, Modelling of 18 pulse STATCOM for voltage stability". Journal of Power Electronics, 2007.
[19] M. S. El-Moursi and A. M. Sharaf, "Novel Controllers for the 48-Pulse VSC STATCOM and SSSC for Voltage Regulation and Reactive Power Compensation". IEEE Transactions on Power Systems, Vol. 20, No. 4, November 2005.
[20] Ravinder Kumar, Ashwani Kumar, "Impact of STATCOM Control Parameters on Available Transfer Capability Enhancement in Energy Markets", Elsevier 2015.
[21] J. Jayachandran and R. Murali Sachithanandam, "Neural Network-Based Control Algorithm for DSTATCOM under Non-ideal Source Voltage and Varying Load Conditions Algorithm", CANADIAN JOURNAL OF ELECTRICAL AND COMPUTER ENGINEERING IEEE, VOL. 38, NO. 4, FALL 2015.
[22] Juan Shi, Amin Noshadi, Akhtar Kalam, and Peng Shi, "Fuzzy Logic Control of DSTATCOM for Improving Power Quality and Dynamic Performance", IEEE 2015.
[23] Chetan W. Jadhao, K. Vadirajacharya, "Performance Improvement of Power System through Static VAR Compensator Using Sensitivity Indices Analysis Method", IEEE 2015.
[24] Juan Shi, Amin Noshadi, Akhtar Kalam and Peng Shi, "Genetic Algorithm Optimized Fuzzy Control of DSTATCOM for Improving Power Quality", IEEE 2014.
[25] Chao-Shun Chen, Chia-Hung Lin, Wei-Lin Hsieh, Cheng-Ting Hsu, and Te-Tien Ku, "Enhancement of PV Penetration with DSTATCOM in Tai-power Distribution System", IEEE TRANSACTIONS ON POWER SYSTEMS, VOL. 28, NO. 2, MAY 2013.