Stress and Rigidity Analysis of Bike Chassis

[1]Maulik Lohia,[2]Prof. Mohsin Bukhari ,[3] Prof.Dhaval P Patel, [4] Amarishkumar J.Patel, [5] Sunilkumar N.Chaudhari
[1]ME Student,[23]Assistant Professor, [45]Lecturer
[12345]Mechanical Engineering Department,
[12]Silver Oak College of Engineering and Technology, [3]Gandhinagar Institute of Technology, Moti Bhoyan, [45] Bhailalbhai And Bhikhabhai Institute Of Technology ,V.V.Nagar

---

***Abstract* – The frame is an important part in a Two Wheeler and it carries the load acting on the vehicle. So it must be strong enough to resist the shock, twist, vibration and other stresses. In vehicle frame different types of failure occur due to static and dynamic loading conditions. Natural frequency, damping and mode shapes are the inherent structural properties and can be found out by modal analysis.**

The objective of thesis is to analysis of double cradle frame under rider weight case and engine weight case and comparison of both existing and modified double cradle frame in static structural analysis by using Solid Work 2015 simulation module.

Our goal is to minimize the effect of these vibrations, because while it is undesirable, vibration is unavoidable. The dynamic characteristics of the two wheeler chassis such as the natural frequency and mode shape will determine by using finite element (FEM) method in Solid Work 2015 frequency analysis.

Author will be taking ideal procedure for improve strength of chassis with respect to stability and comparison result of both existing and modified chassis.

***Index Terms* – Stress, Rigidity, Bike Chassis, Natural Frequency, Structure.**

I. INTRODUCTION

The frame is a skeleton upon which parts like gearbox and engine are mounted. So it is very important that the frame should not buckle on uneven road surface. Also it should not be transmitted distortion to the body. Two wheeler frames can be made of steel, aluminium or an alloy. Mostly the frame is consisting of hollow tube. If the natural frequency of two wheeler frame is coincides with excitation frequency then the resonance will occur. Due to resonance the frame will undergo dangerously large oscillation, which may lead excessive deflection and failure. To solve these problems, experimental modal analysis is very essential. Natural frequency, damping and mode shapes are the inherent structural properties and can be found out by experimental modal analysis.

Experimental Modal analysis (EMA) is the process of determining the modal parameters of a structure for all modes in the frequency range of interest. The main purpose of this thesis is to find out natural frequency, damping and mode shape of two wheeler frame using experimental modal analysis. A chassis consists of an internal framework that supports a man-made object. It is analogous to an animal's skeleton. An example of a chassis is the under part of a motor vehicle. That mass or weight reduction is an important issue in automotive industry. Chassis is a prominent structure for a moped body, which takes the loads during serious accidents, costly recalls; chassis also has an impact on product image.

II.CAD MODELING OF MODIFIED DOUBLE CRADLE FRAME FOR STRENGTH

As shown in Figure 1 to 4, there are different orientations of Modified Double Cradle Frame **as** isometric view, front view, top view and side view.

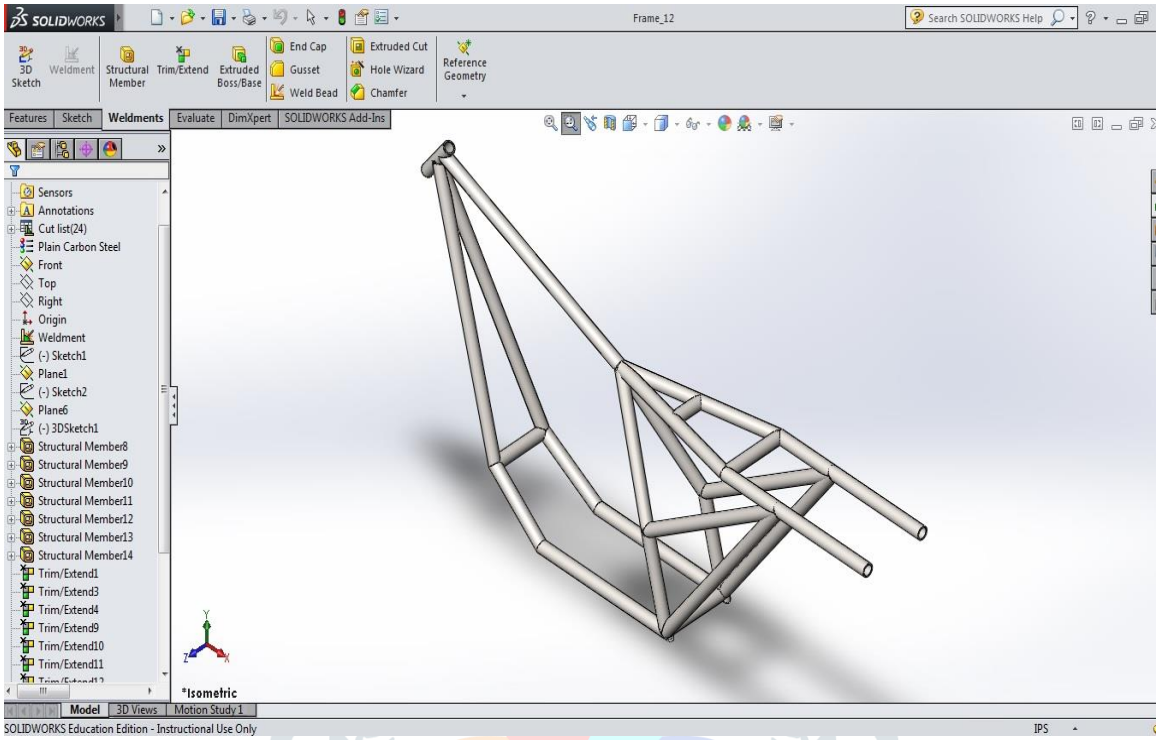

Fig.1 Isometric view of Modified Double Cradle Frame

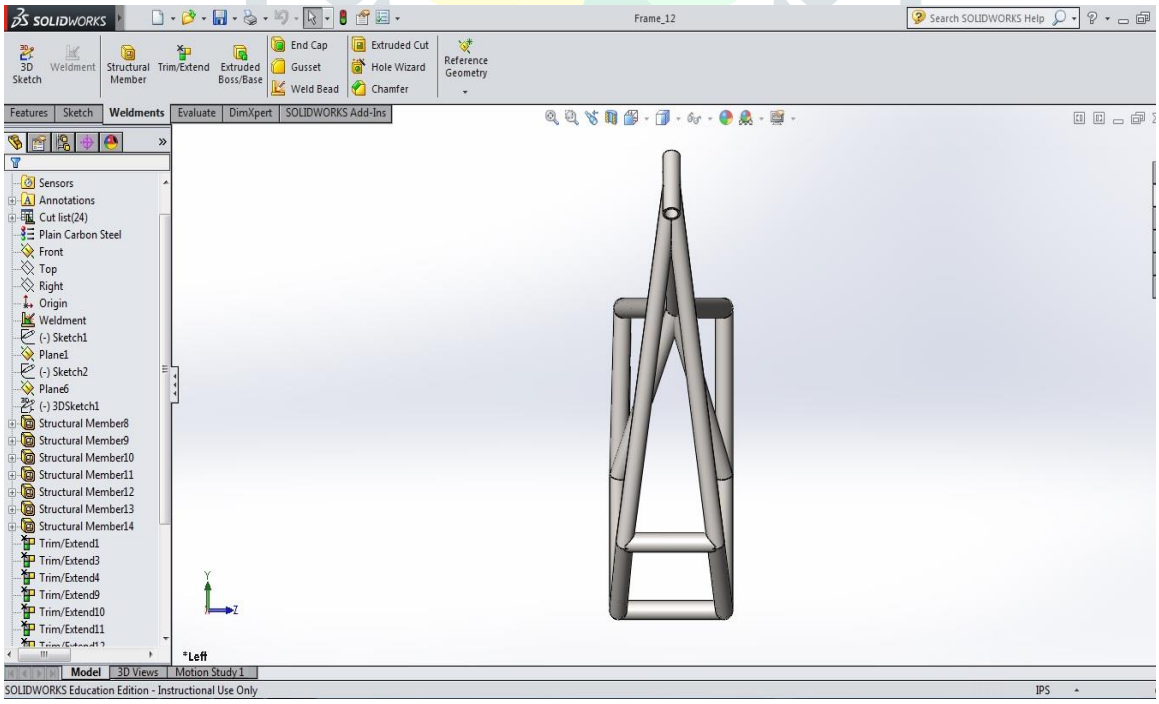

Fig.2 Front view of Modified Double Cradle Frame

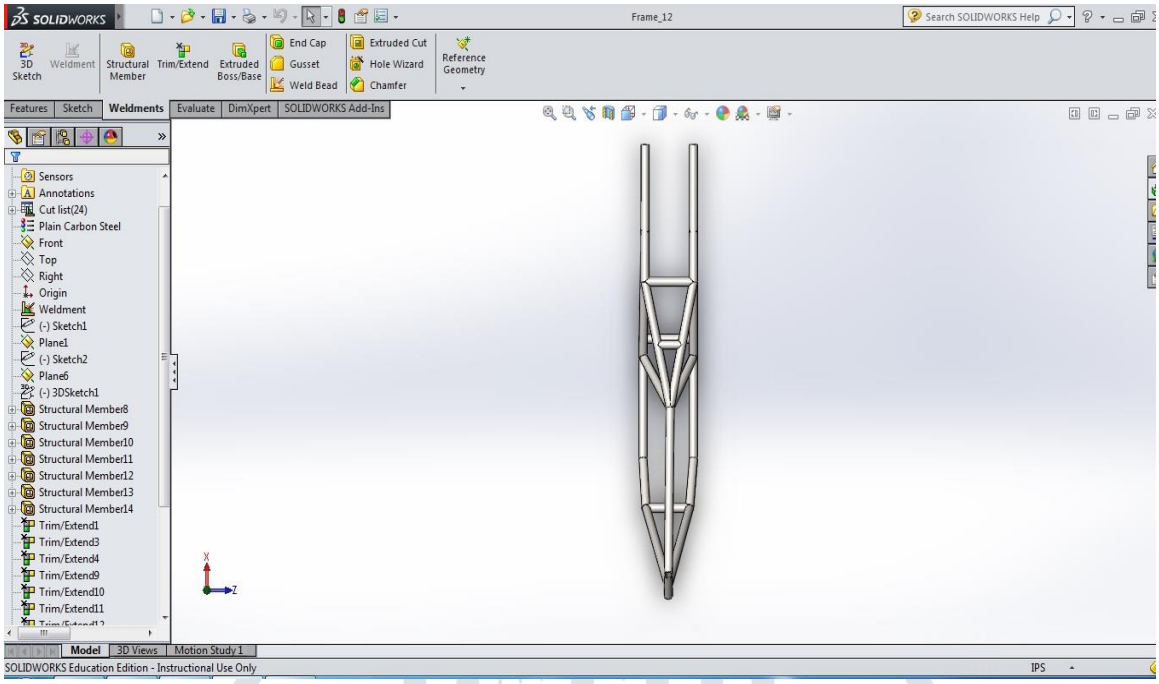

Fig.3 Top view of Modified Double Cradle Frame

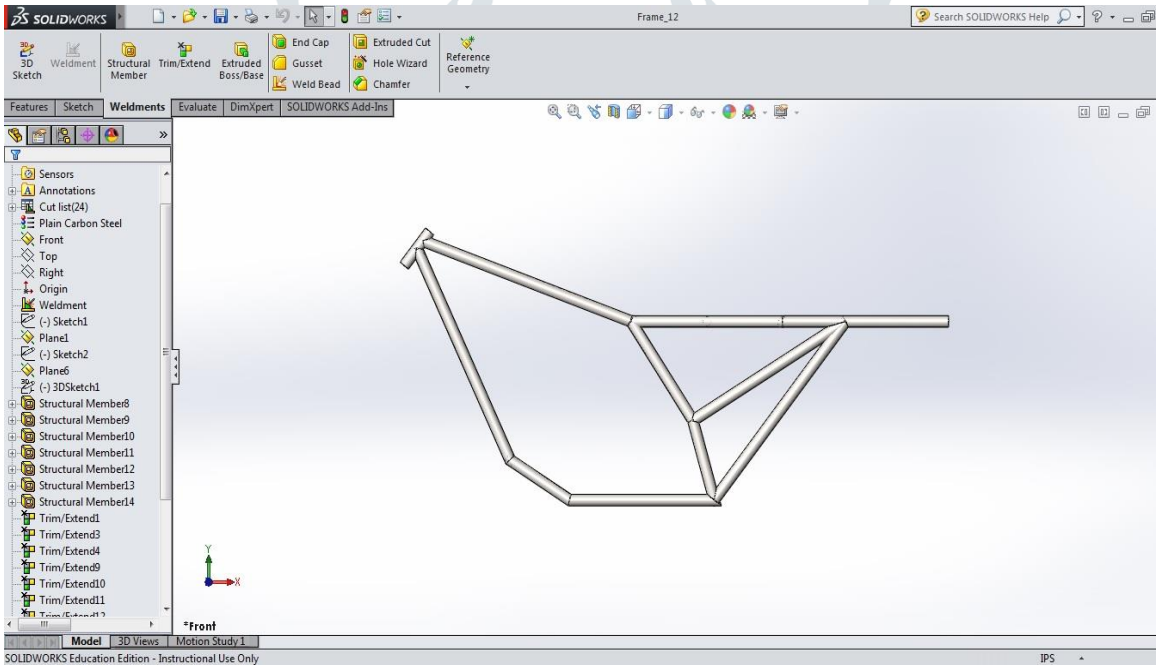

Fig.4 Side view of Modified Double Cradle Frame

III. STRUCTURAL ANALYSIS OF MODIFY DOUBLE CRADLE FRAME

IV. BASIC STEPS OF FEA ANALYSIS FOR MODIFY DOUBLE CRADLE FRAME

(1) Preprocessing: defining the problem

The major steps in preprocessing are

(i) define key points/lines/areas/volumes,

(ii) define element type and material/geometric properties,

(iii) Mesh lines/areas/ volumes as required. The amount of detail required will depend on the dimensionality of the analysis, i.e., 1D, 2D, ax symmetric, and 3D.

(2) Solution: assigning loads, constraints, and solving

Here, it is necessary to specify the loads (point or pressure), constraints (translational and rotational), and finally solve the resulting set of equations.

(3) Post processing: further processing and viewing of the results

In this stage one may wish to see

(i) lists of nodal displacements,

(ii) element forces and moments,

(iii) deflection plots, and

(iv) Stress contour diagrams or temperature maps.

Step-1 Pre-processing

1) First Prepare Parts in Solidworks 2015.

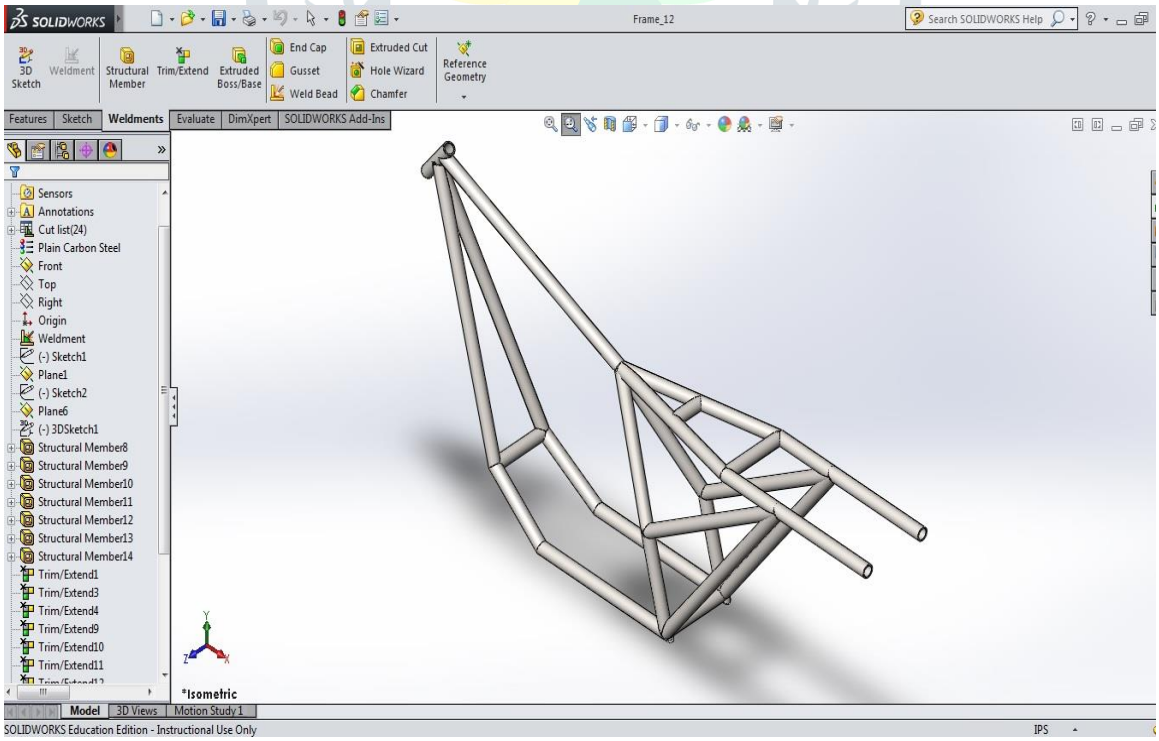

Fig. 5 Geometry of Modify Double Cradle Frame using static analysis

2) Check the Geometry for Meshing.

3) Apply Material for Each Component

Table 1 Pipe Steel (Alloy Steel) Material Properties

Elastic Modulus	210000 N/mm^2
Poisson's Ratio	0.28
Shear Modulus	79000 N/mm^2
Mass Density	7700 kg/m^3
Tensile Strength	723.83 N/mm^2
Yield Strength	620.42 N/mm^2
Thermal Expansion Coefficient	1.3 x 10^{-5} /K
Thermal Conductivity	50 W/(m.K)
Specific Heat	460 J/(kg.K)

4) Create mesh.

Solid mesh (Beam mesh) which is programme generated.

Fine Meshing is apply

No. of Nodes:- 389

No. of Elements:- 348

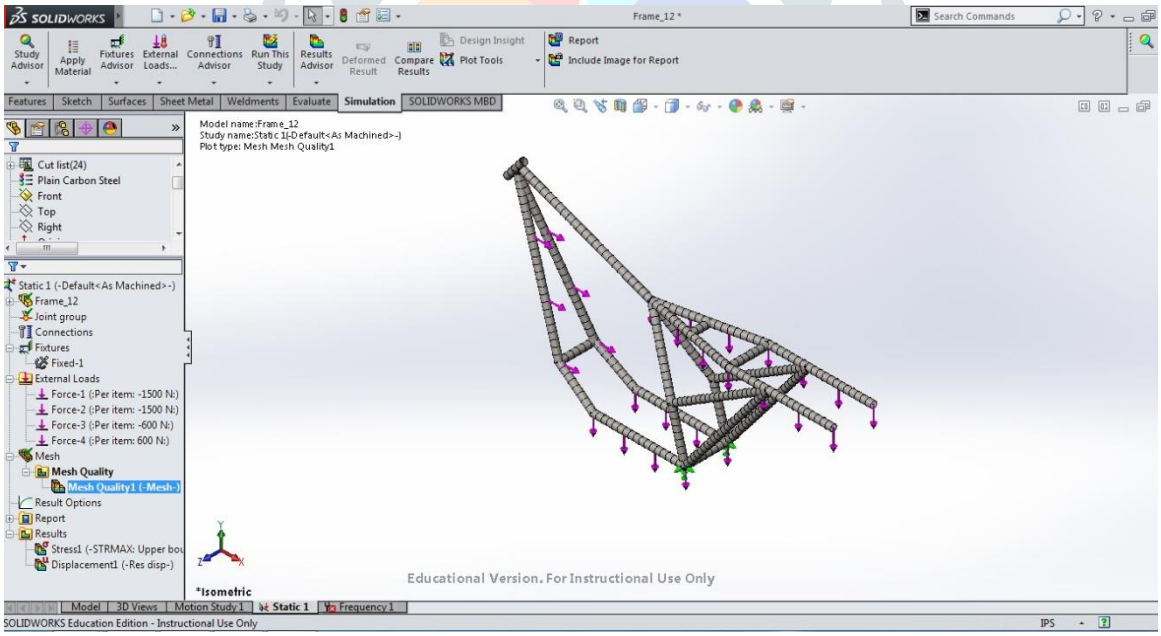

Fig. 6 Meshing of Modify Double Cradle Frame using static analysis

5) DEFINE BOUNDRY CONDITION

Apply fixed support at base of frame where it is stand. There is not movement in X,Y and Z Linear and Rotational.Frame is fixed at base stand so takes as fixed boundary condition

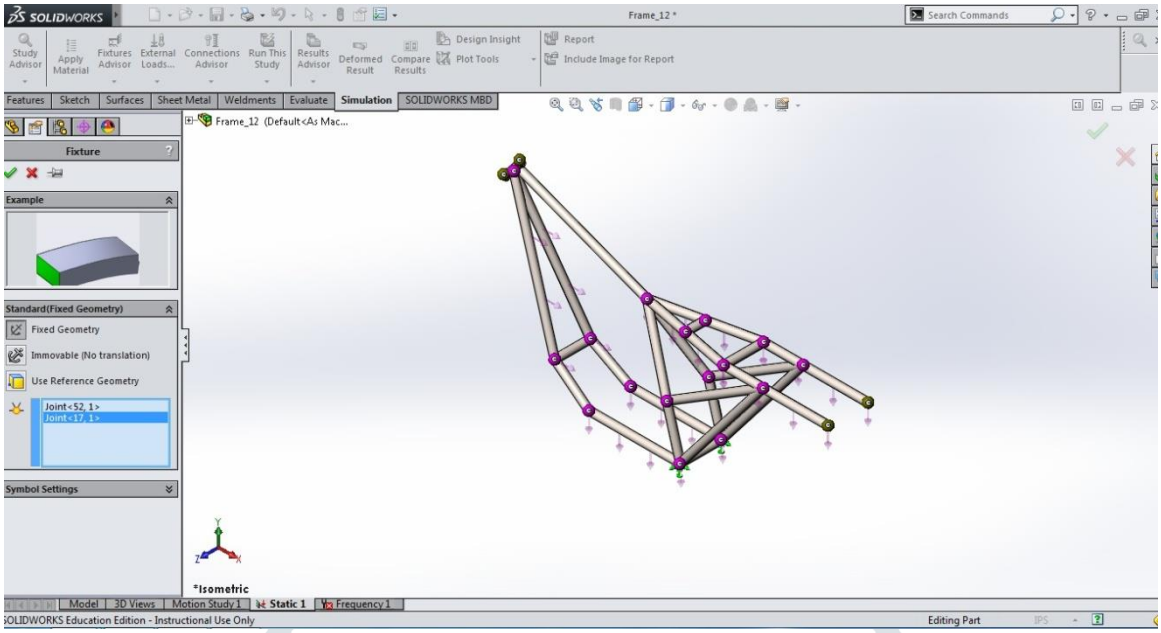

Fig. 7 Boundary condition of Modify Double Cradle Frame using static analysis

APPLY FORCE

Force magnitude on upper seat frame is 1500N. (Consider weight on seat is 150kgf)

Force magnitude on base frame where engine located is 600N (Consider weight of engine is 60kgf)

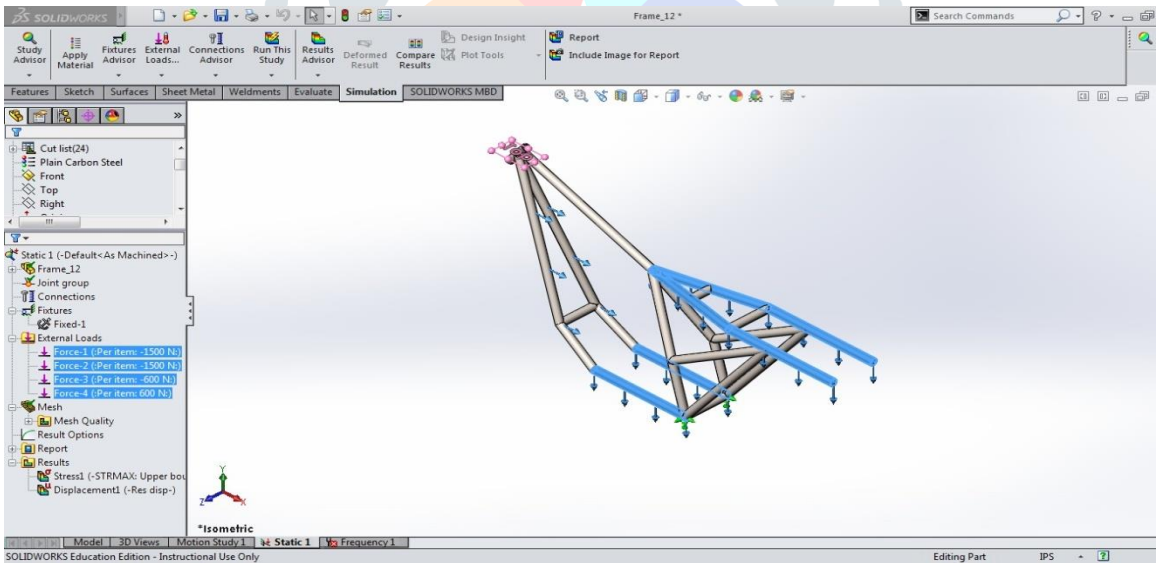

Fig. 8 Force applying on Modify Double Cradle Frame

RESULTS OF ANALYSIS

EQUIVALENT STRESS FOR STATIC ANNALYSIS

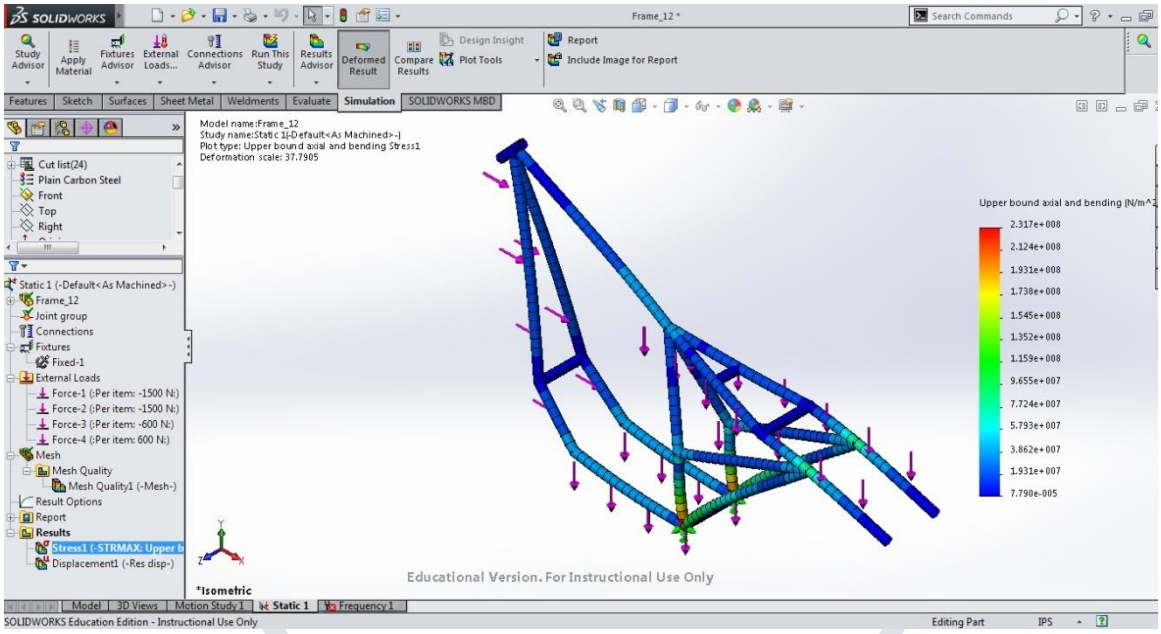

Fig. 9 Von mises Stress analysis of Modify Double Cradle Frame

TOTAL DEFORMATION

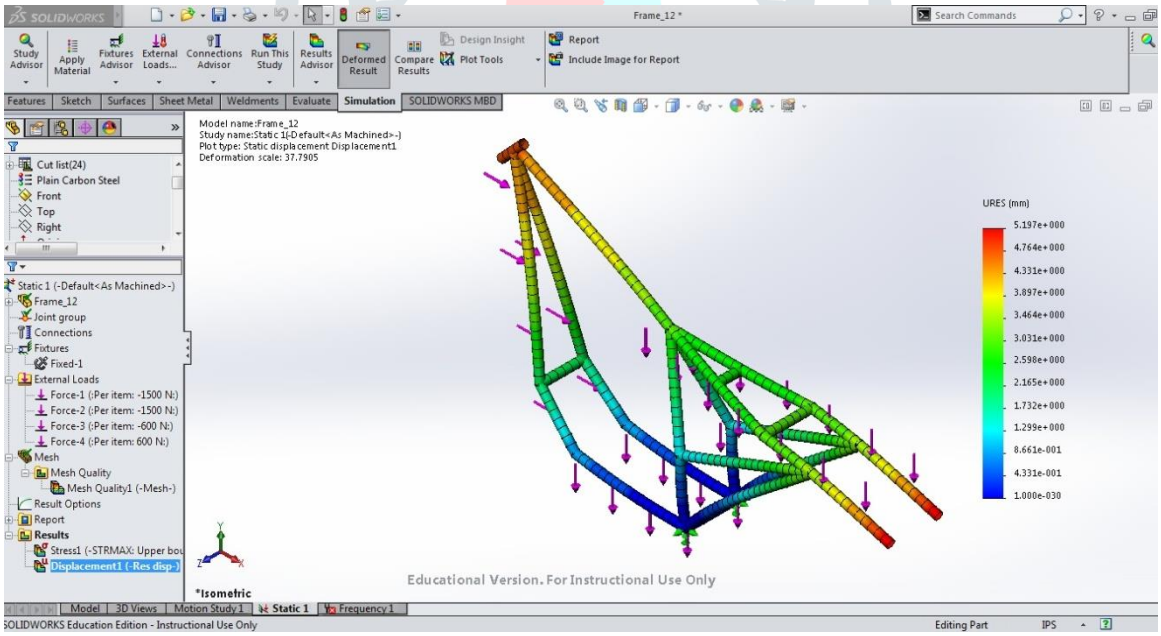

Fig. 10 Deformation of Modify Double Cradle Frame

Table 2 Result

Material	Von mises stress (MPa)	Total Deflection (mm)
Alloy Steel (Pipe Steel)	192.99	8.09647

COMPARISON OF BOTH RESULT OF EXISTING AND MODIFY FRAME

Table 3 Comparison of Result

	Von mises stress (MPa)	Total Deflection (mm)
Existing Frame	192.99	8.09647
Modify Frame	231.71	5.19661

As shown Table 3 which contain comparison of both result of existing frame and modify frame von mises stress will be increase from 192.99MPa to 231.71 MPa but major changes in deflection of frame from 8 mm to 5.1 mm so it should reduce deflection by 35.84%.

II. ACKNOWLEDGMENT

It is indeed a great pleasure for me to express my sincere gratitude to those who have always helped me for this dissertation work. I am extremely thankful to my thesis guide Asst. Prof. Mohsin Bukhari, Asst. professor in Mechanical Engineering Department, Silver Oak College of Engineering and Technology is valuable guidance, motivation, cooperation, constant support with encouraging attitude at all stages of my work. I am highly obliged to him for his constructive criticism and valuable suggestions, which helped me to present the scientific results in an efficient and effective manner in this research.

III. CONCLUSION

Analysis has been completed for doing static and modal analysis of the two-two wheeler chassis of double Cradle Frame meeting all international standards of safety. The chassis with same material is performing better with a satisfying amount of deflection reduction.

As per ergonomic consideration there was change in existing frame with respect to strength and reduced deflection of frame.

Comparison of both result of existing frame and modify frame von mises stress will be increase from 192.99MPa to 231.71 MPa but major changes in deflection of frame from 8 mm to 5.1 mm so it should reduce deflection by 35.84%.

REFERENCES

PAPERS

[1] Mr. Barister Giri, Prof. Shah B. R., "Designing of Vibration Analysis of Scooter Chassis", International Journal Of Research Publications In Engineering And Technology, Volume No.2, Issue 3, March-2016.

[2] Mr. Rixon K L ,Mohammed Shareef V, Prajith K S, Sarath K ,Sreejith S, Sreeraj P,, "Fabrication of Compressed Air Bike'', International Research Journal of Engineering and Technology, Volume No.3 Issue: 3, March-2016.

[3] Pavana Shireesha Paningipalli, Dr.F.B.Sayyad, "Theoretical And Experimental Validation Of Bike Chassis For Weight Reduction'', International Journal Of Scientific & Technology Research Volume 5, Issue 10, October 2016.

[4] T. Kondaiah, D.Pavan Kumar, "Shape And Material Optimization Of A Two Wheeler Front Suspension Frame For Pipe Type And Rectangular Cross Sections'', International Journal of Emerging Trends in Engineering Research, Volume 4, No.6 June 2016.

[5] Prakash Katdare, S.C.Shilwant, "Design Optimization of Two Wheeler (Bike) Chassis'', International Engineering Research Journal (IERJ) Special Issue 2 Page 4273-4277, 2015.

[6] Dave D. White, M. Troy Waskey, Grant P. Brodehl, Pamela E. Foti, "A Comparative Study of Impacts to Mountain Bike Trails in Five Common Ecological Regions of the Southwestern U.S.'', Journal of Park and Recreation Administration, Volume 24, Numbe2r 12, Summer 2006, pp. 21-41.

[7] D.Kondayya, "3-Dimensional FE Analysis and Optimization of Bike Structure'', International Journal of Engineering Research, Volume No.5 Issue: Special 2, pp: 308-311.

[8] Aparna Deshpande, Amol B. Gaikwad, "Design and Optimization of Bicycle Frame for the Cyclist's Comfort'', International Journal on Recent and Innovation Trends in Computing and Communication, Volume: 4 Issue: 5,220 - 224.

[9] Gaurav Vasantrao Bhunte and Dr. Tushar R. Deshmukh, "A Review on Design and Analysis of Two Wheeler Chassis'', International Journal For Research In Emerging Science And Technology, Volume-2, Issue-1, January-2015.

[10] Bhagyashri Adake, Dr. A. D. Desai, H. S. Bawiskar, "Cost and Structural Optimisation of Modular Bicycle Frame", International Journal of Science, Engineering and Technology Research (IJSETR), Volume 4, Issue 10, October 2015.

[11] Matteo Corno, Pierpaolo De Filippi, Valerio Turri, Giulio Panzani and Sergio M. Savaresi , "Control-Oriented Modeling of Motorcycle Dynamics'', 16th IFAC Symposium on System Identification The International Federation of Automatic Control Brussels, Belgium. July 11-13, 2012.

[12] Pierpaolo De Filippi, Mara Tanelli, Matteo Corno, Sergio M. Savaresi, "Enhancing active safety of two-wheeled vehicles via electronic stability control'', Proceedings of the 18th World Congress The International Federation of Automatic Control Milano (Italy) August 28 - September 2, 2011.

[13] Marc Siebert, "Adjustable hand bike-chassis for off road use ("Mountain hand bike")'', Procedia Engineering 2 (2010) 3157–3162.

[14] P. De Filippi, M. Tanelli, M. Corno, S.M. Savaresi, L. Fabbri , "Design of semi-active steering damper control strategies for sport motorcycles'', 6th IFAC Symposium Advances in Automotive Control Munich, Germany, July 12-14, 2010.

[15] Dipl.-Ing. Peter Reinold, Dipl-Ing. Vitalij Nachtigal, Prof. Dr.-Ing. habil. Ansgar Traechtler, "An Advanced Electric Vehicle for Development and Test of New Vehicle-Dynamics Control Strategies'', 6th IFAC Symposium Advances in Automotive Control Munich, Germany, July 12-14, 2010.