COORDINATED ACTIVE POWER CONTROL BETWEEN SHUNT AND SERIES CONVERTERS OF UPQC BY USING BESS

GANDU KAVITHA1 | J.SRINIVASRAO 2
1, PG scholar, Department of PE&ED, Anurag Engineering College, Kodad, Telangana, India.
2, Asst. Professor Department of EEE, Anurag Engineering College, Kodad, Telangana, India.

ABSTRACT: This article presents a novel conception of co-ordinating active power distribution among shunt and series converters of unified power quality conditioner (UPQC) for distributed generation purposes amid PID regulator. Generally, the UPQCs are utilized to alleviate mutually voltage and current power quality troubles. However, these UPQCs are furthermore utilized for distribute active power in accumulation to its power quality enhancement by amalgamate distributed generation (DG) at the DC link of back to back linked converters. But, only the shunt converters are utilized to bear the entire active power from the DG resources and the series converters are utilizing to knob only voltage associated power quality troubles. So, the shunt converter is encumbered profoundly and the series converter is kept at rest in steady state cases. The extra reliance on the shunt converter also decreases the dependability of the whole organism. This projected control approach is utilized to bear active power through mutually series converter and shunt converter flush at the steady state situations. The projected technique advances the exploitation of the converters and also the consistency of the system. The usefulness of the projected control approach is verified by evaluate with the unadventurous control algorithm, where only the shunt converter is utilized to bear active power.

Keywords—Distributed Generation; unified power quality control (UPQC); PID Controller

I. INTRODUCTION

The demanding concerns of a victorious assignment and amalgamation of unified power quality conditioner (UPQC) in a distributed generation (DG)-based grid linked microgrid (μG)system are 1) Control complication for active power transfer; 2) facility to reimburse non-active power during the islanded type; and 3) complexity in the ability embossing in a modular mode [1].For a smooth power transmit among the grid-connected structure and islanded type, a variety of outfitted alterations are obtainable, such as switching among the current and voltage control type, heftiness alongside the islanding detection and re connection delays and method and so on [2], [4]. Obviously, these additional amplify the control difficulty of the microgrid systems. To expand the operational adaptability and to enhance the power quality in grid linked microgrid systems, a novel control approach assignment and amalgamation method of UPQC have been projected in [3], which is expression as UPQC μG. In the UPQC μG incorporated distributed system; micro grid (with storage) and shunt part of the UPQC μG are positioned at the Point of common coupling. The series of the UPQC is positioned ahead of the Point of common coupling and in series with the grid. DC link is linked to the storage also, if there.

In this article, the control method of the obtainable UPQC μG and PID controller in [4] is improved hence; it is expression as UPQC μG−IR. The usages obtainable by the projected UPQC μG−IR in excess of the predictable UPQC are as go after .To scrutinizes the result on the attribute of voltage sag / swell and disturbance for the methods. Both in the interrelated and islanded types, the μG offer only the active power to the load. Thus, it can decrease the control difficulty of the DG converters. Islanding discovery and reconnection methods are initiates in the projected UPQC as a secondary control. To sustain the

operation in islanded type and reconnection throughout the UPQC and PID, communication procedure among the UPQC µG and µG system is reveal in [5]. In this article, the control method of the obtainable UPQC µG and PID controller in [6] is improved by executed an intellectual islanding and new re connection method with compact quantity of switches that will make sure seamless operation of the µG devoid of disturbance [7].Hence, it is expression as UPQC µG−IR. The advantages accessible by the projected UPQC µG−IR over the predictable UPQC are as follows.

- It can balance voltage disturbances/sag/swell and non-active current in the interrelated type.
- Hence, the DG converter can still be linked to the system through these imprecise situations. Thus, it improves the operational suppleness of the DG converters/µG scheme to a huge amount, which is additional detailed in afterward segment.
- Shunt branch of the UPQC Active Power Filter (APFsh) can preserve linked during the islanded type and also reimburses the non-active Reactive and Harmonic Power (QH) power of the load.
- Both in the interrelated and islanded approaches, the µG afford only the active power to the load. So, it can diminish the control difficulty of the DG converters.
- Islanding discovery and reconnection method are initiates in the projected UPQC as a secondary control. A communication among the UPQC and µG is also providing in the secondary control. The DG converters may not necessitate having islanding uncovering and reconnection features in their control system [8-12].

Fig. 1 demonstrates the system arrangement of the UPQC incorporated with the distributed generation (DG) at the DC link of back to back associated converters. This distributed energy resource may consists of altered renewable sources e.g., solar, wind, biogas and fuel cell in concurrence with battery energy storage system (BESS). Nevertheless, in the present case only BESS is considered for exhibition function. The chief function of the UPQC is to transmit the power generated from the DG to the load and also to enhance the voltage and current power quality struggles.

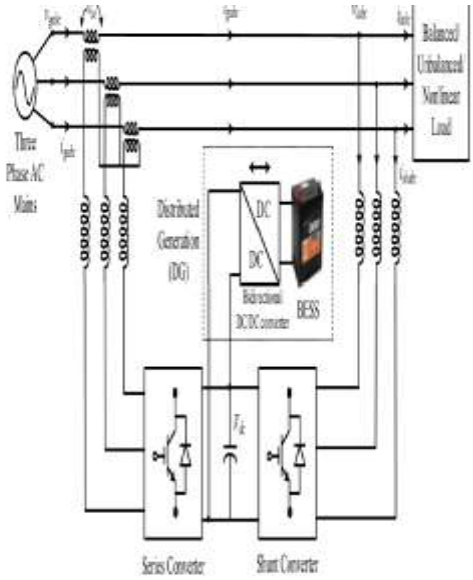

Fig. 1. Schematic of three phase UPQC with distributed generation.

II. CONVENTIONAL CONTROL STRATEGY:

UPQC The representation block diagram of predictable UPQC-Q is exposed in the Fig. 1. The UPQC consists of two 3-phase voltage source inverters linked in cascade through a common DC link capacitor. The DVR and the STATCOM are series and shunt connected voltage source inverters (VSIs) correspondingly. The major objectives of STATCOM are to reimburse for the reactive power demanded by the load, to abolish the harmonics from the supply current, and to control the DC link voltage. The STATCOM operates with hysteresis current control type to force the source current, is, in phase with vs such that input power factor is forever preserve unity.

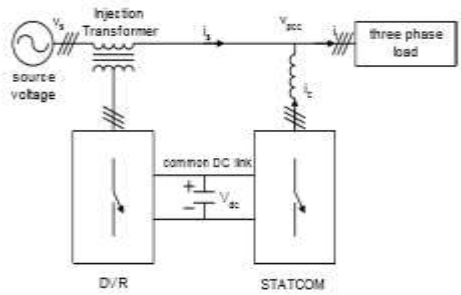

Fig.1 Block diagram of UPQC

To minimize voltage harmonics and to balance and control, the terminal voltage of the load or line, using a series transformer series AF is connected in series with the mains before the load. It is used to reduce negative-sequence voltage and control the voltage on three-phase systems. It can be installed by electric utilities to damp out harmonic propagation caused by resonance with line impedances and passive shunt compensators and to compensate voltage harmonics.

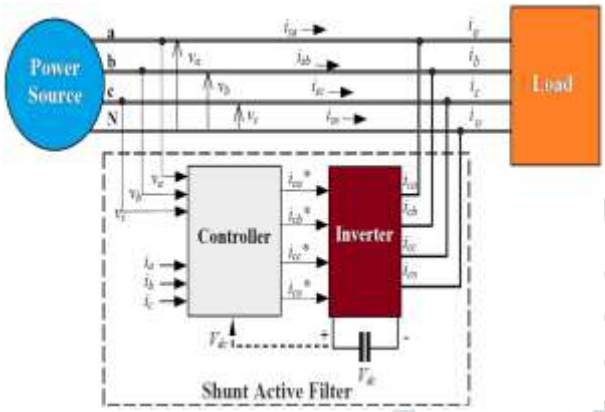

Fig. 1.1 shunt connected active filter

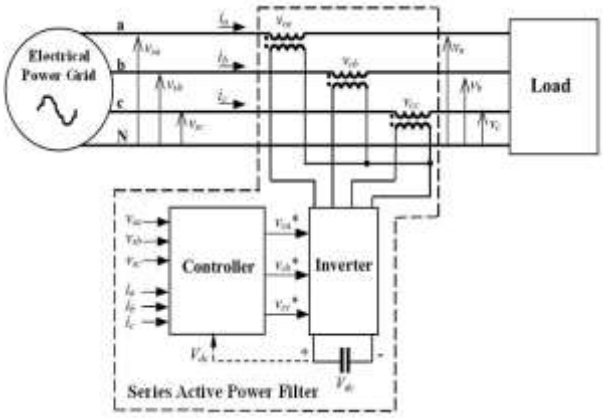

Fig. 1.2 series connected active filter

III. PROPOSED CONTROL STRATEGY:

This section presents the proposed control algorithms for series converter, shunt converter, and battery energy storage system (BESS). The main objective of this UPQC is to transfer active power from the DG and also to improve the voltage and current power quality problems.

A. Series Converter control algorithm

The main purpose of the series converter is to improve the voltage power quality and also to transfer active power. The voltage power quality problems are eliminated by injecting the voltage in series through series transformer. The active power is transferred through the series transformer by phase shifting the load voltage from the grid voltage. So, the reference load voltage is generated in such a way to inject active power and also to improve the voltage power quality at the load terminals. The phasor diagram for the basic understanding of series converter voltage injection scheme is shown in Fig. 2. The control schematic for the series converter is presented in Fig. 2. The maximum active power that can be transferred through the series converter depends upon the kVA rating of the converter.

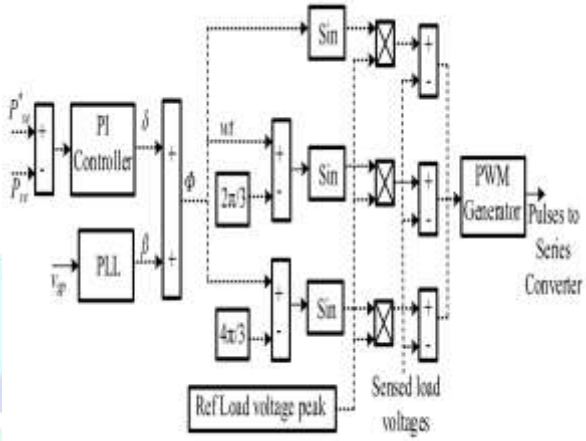

Fig. 2. Control algorithm for the series converter.

B. Shunt Converter Control Algorithm

A shunt active filter is used to transfer the active power from the DG in addition to the basic responsibilities such as load current harmonics compensation and load reactive power compensation. So, the shunt converter current consists of load current harmonics, the reactive component of load current and active power component of shunt converter current. However, indirect current control method is adapted for controlling the shunt converter. So, the grid currents are taken as reference, which should be free from harmonics. The complete control scheme for the shunt converter is presented in Fig. 3.

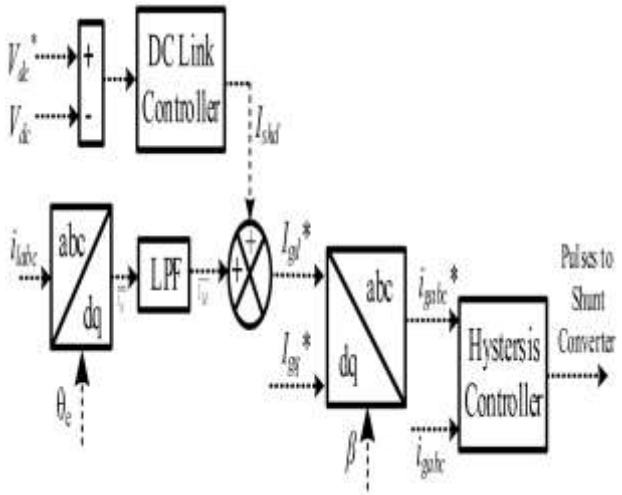

Fig. 3. Control algorithm for shunt converter.

IV. MATLAB AND SIMULATION RESULTS:

The Simulation block diagram is shown in figure.4.

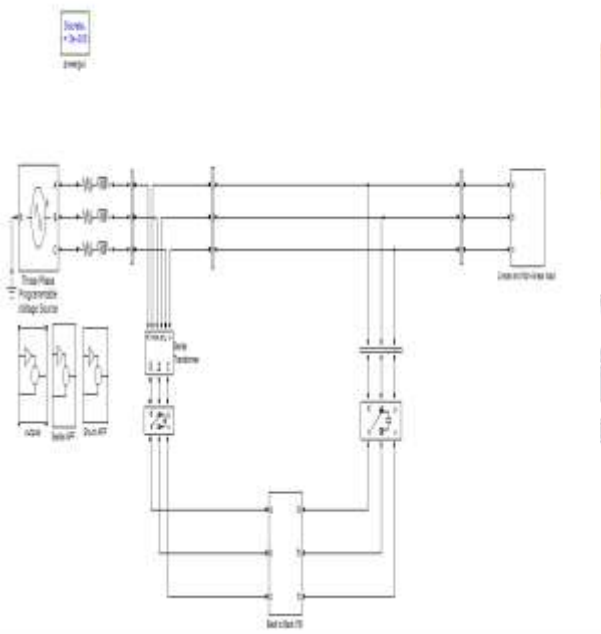

Fig.4. MATLAB Simlink block diagram

Case 1: Output Voltage waveforms are under sag conditions is shown in figure.5.

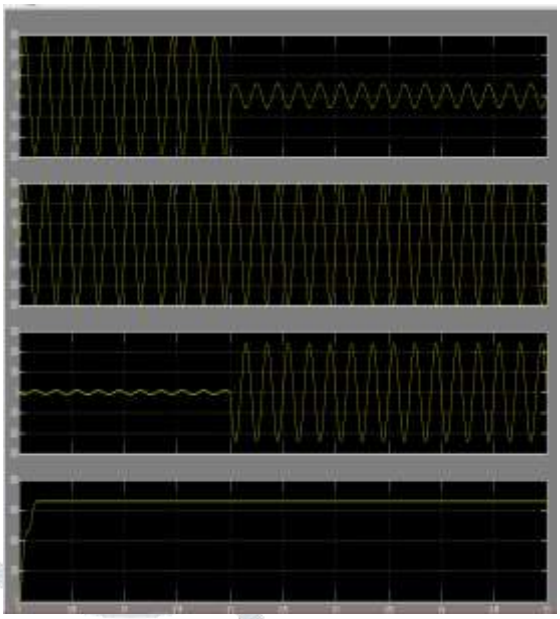

Fig.5. a) Source Voltage b) Load Voltage c) Injected Voltage d) Ultra capacitor capacitance.

Case 2: Output Voltage waveforms are under swell conditions is shown in figure.6.

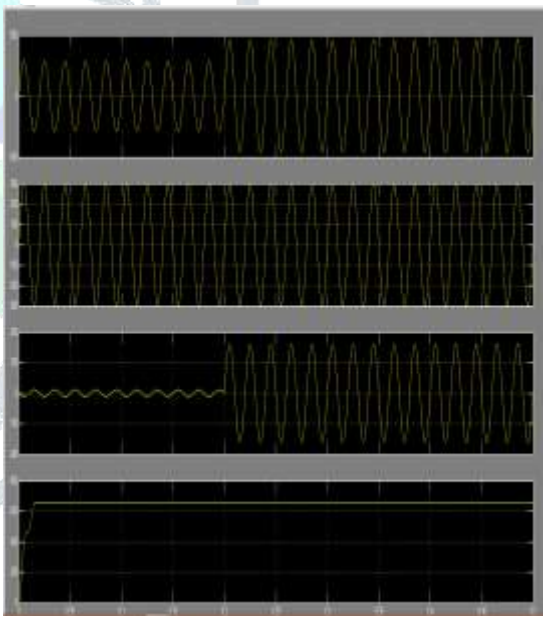

Fig.6. a) Source Voltage b) Load Voltage c) Injected Voltage d) Ultra capacitor capacitance.

V. CONCLUSION:

A new coordinated active power control strategy has been proposed to share the active power between the shunt and series converters of

the UPQC for distributed generation applications. This proposed control strategy has been compared with the conventional control strategy of the UPQC. This control algorithm reduces the burden on the shunt converter and also improves the reliability of the system.

REFERENCES:

[1] S K Khadem, M Basu, M F Conlon, UPQC for Power Quality Improvementin DG Integrated Smart Grid Network – A Review, Int Journal of EmergingElectric Power Systems, Vol. 13(1), 2012, Art 3

[2] X. Yu, A.M. Khambadkone, H. Wang, S. Terence, Control of ParallelConnectedPower Converters for Low-Voltage Microgrid—Part I: A HybridControl Architecture, IEEE Trans

[3] S K Khadem, M. Basu, M.F. Conlon, A new placement and integrationmethod of UPQC to improve the power quality in DG network, UniversitiesPower Engineering Conference

[4] A Kahrobaeian, Y Mohamed, Interactive distributed generation interface forflexible microgrid operation in smart distribution systems, IEEE TransSustainable Energy, vol.3(2), pp.295-305, 2012 Power Electronics , vol.25(12), 2010, pp.2962-2970 , UPEC, Vol.1, Sept 2013.

[5] J. M. Guerrero, J. C. Vasquez, J. Matas, L. G. de Vicuña, and M. Castilla, "Hierarchical control ofdroop-controlled AC and DC microgrids—A general approach toward standardization," IEEETrans. Ind. Electron., vol. 58, no. 1, pp. 158–172, Jan. 2011.

[6] B. Han, B. Bae, H. Kim, and S. Baek, "Combined operation of unified power-quality conditionerwith distributed generation," IEEE Trans. Power Del., vol. 21, no. 1, pp. 330–338, Jan. 2006.

[7] J. Nielsen, F. Blaabjerg, and N. Mohan, "Control strategies for dynamic voltage restorer compensate voltage sags with phase jump," in Proc.16th APEC, vol. 2. 2001, pp. 1267–1273.

[8] D. M. Vilathgamuwa, A. R. Perera, and S. S. Choi, "Voltage sag compensation with energy optimized dynamic voltage restorer," IEEE Trans.Power Del., vol. 18, no. 3, pp. 928–936, Jul. 2003.

[9]S.S.Choi, J.D.Li, andD.M.Vilathgamuwa,―Ageneralizedvoltage compensation strategy for mitigating the impacts of voltagesags/swells,‖ IEEE Trans. Power Del., vol. 20, no. 3, pp. 2289–2297, Jul. 2005.

[10] M. R. Banaei, S. H. Hosseini, S. Khanmohamadi, andG. B. Gharehpetian, ―Verification of a new control strategyfor dynamic voltage restorer by simulation, ‖Simul.Model.Pract.Theory, vol. 14, no. 2, pp. 112–125, 2006.

[11] M. Moradlou and H. R. Karshenas, ―Design strategy foroptimum rating selection of interline DVR,‖ IEEE Trans.Power Del., vol. 26, no. 1, pp. 242–249, Jan. 2011.