A review on Congestion management utilizing FACTS devices in deregulated environment with security constraint

[1] Anubha gautam, [2] Dr. P R Sharma, [3] Dr. Yogendra Kumar

[1] Assistant Professor, [2] Professor, [3] Professor
[123] Department of Electrical,
[123] YMCAUST, Faridabad.

Abstract: Congestion management is one amongst the most difficult issues within the power world, not only in India however additionally all told over the world. This paper initially reviews the requirements of the advanced FACTS applications for future power systems, and then discusses general principles of congestion management, that depend upon market models, market policy and electricity network conditions. This paper reviews completely different strategies that are projected to see optimal location and best setting of FACTS devices for the aim of congestion management. Seeking the simplest place is performed using hybrid PSO, serial quadratic programming & genetic algorithmic rule. Further completely different strategies of congestion management by voltage stability & injecting active/reactive power within the system using particle swarm improvement, nonlinear Programming (NLP) & GA are discussed during this paper**.**

***IndexTerms* - EPS, GWO, FACTS, TCSC, active power loss and reactive power loss.**

I. INTRODUCTION

The power industry is facing substantial changes everywhere the world .In regulated grid Transmission companies (TRANSCOs), Generation companies (GENCOs) and Distribution companies (DISCOs) all return under one organization, typically government. All the expenditure incurred on grid is barred by the government and all the revenue came, it will move to the govt. this can be the vertically integrated structure of the power system. On the opposite hand, in deregulated power systems TRANSCOs, GENCOs, DISCOs are under totally different organizations. with the advent of deregulation in electricity sector, variety of generation and distribution corporations have immerged into the image and replaced the vertical integrated structure of electrical utilities .To maintain the coordination between them there will be one system operator altogether sorts of deregulated grid models, typically it's independent System Operator (ISO).The privatization and deregulation of electricity markets have a really large impact on the majority power systems around the world. Currently the Competitive electricity markets are complicated systems with several participants who obtain and sell electricity. This competitive market must face range of issues, congestion is one them.

When the producers and customers of electric energy need to provide and consume in quantity, that will cause the transmission to control at or beyond one or more transfer limits, then the system is alleged to be 'congested'. Congestion may be a scenario wherever the demand for transmission capability exceeds the transmission network capabilities, which could result in a violation of network security limits, being thermal, voltage stability limits or a (N-1) condition. Congestion, being results of power flows, could occur at any location within the interconnected network. Congestion Management is regarding controlling the transmission so limits are observed. Hence ISO should relieve that congestion so the system is maintained in secure state.

Many factors will contribute to the condition of congestion. The most obvious ones are:

- Market organization
- Electricity cost differences
- Fuel accessibility

Market organization is a supply of congestion if it provides no incentives to the efficient use of the grid. Here network constraints are a problem of the System Operator, and not of market players, these results into inefficient use of the grid. Electricity costs are a operate of the out there fuel. Some countries rely on hydro electricity whereas others have many lignite coal, or gas resources. Political decisions also are a major issue as for example nuclear power. With no legal barriers, market players can search for the most affordable supply of electricity out there. So it's important to prepare the international electricity trade in such some way, that nobody takes a free ride making use of peculiarities. Accessibility of fuel is closely connected to energy value, with less quantity of fuel out there, naturally result in electricity increase. Systems experiencing fuel issues tend to possess very high costs that in turn attract foreign traders. Moreover, the native demand on a system with electricity shortages cannot be met by domestic generation, requiring a lot of import and congesting the interconnections.

Congestion can be subdivided into two categories: Internal congestion (Intra –Zonal) and cross border congestion (inter zonal). Intra zonal congestion occurs once the system under study lies at intervals single system operator's control. Here, the congestion

might not be visible to a large range of market players, because of socialized intra zonal congestion prices. so its intensity needs to be monitored and controlled to avoid a socially unacceptable drift.

Cross-border congestion, additionally known as seams problems, is congestion between System Operator's control areas. The most important issue is that market organization, regulation and investment framework on each side of the interconnection is different, making the allocation of cross-border capability and settlements of congestion prices more difficult.

ISO uses 2 ways for congestion management. Value free means that and none value free means that. A. Cost-free means that: cost-free means have the benefits that it doesn't affect economical matters, thus to relieve the congestion GENCOs and DISCOs won't come into picture.

1.1. Cost free means include

- Out-aging of congested lines.
- Operation of transformer taps/phase shifters.
- Operation of FACTS devices particularly series devices.

1.2. Non-cost-free means

- Re-dispatch of generation in a manner different from the natural settling point of the market. Some generators back down while others increase their output. The effect of this is that generators no longer operate at equal incremental costs.
- Reduction of loads and the exercise of (not-cost-free) load interruption options.

II. Congestion Management Using Facts

Flexible AC transmission systems (FACTS) are a new technology developed in recent 20 years, and it's been wide place in apply within the world. FACTS are outlined by the IEEE as a power electronic-based system and different static instrumentation that has the power to enhance controllability, increase power transfer capability. Higher utilization of the present grid to extend power transfer capability by putting in power unit support, like capacitor banks and FACTS (Flexible AC Transmission Systems) devices becomes imperative. Capacitors, Static VAR Compensator (SVC), Thyristor Controlled Series capacitor (TCSC), and Unified Power Flow Controller (UPFC) are a number of the samples of FACTS devices used for VAR support. The most advantage of FACTS devices is that the risk of their installation for a brief amount compared to the look and construction of recent transmission lines. FACTS not only improve the transmission capacity however conjointly reduce the losses. However, FACTS devices are expensive. The investment value of FACTS devices are often classified as

- apparatus equipment charge,
- Necessary infrastructure charge and
- Operation maintenance.

Congestion management using FACTS devices requires a three step approach:

- determine the optimal location of FACTS devices
- The settings of their control parameters (must be optimized).
- The cost of their incorporation must be optimized.

An analysis of the work done on the FACTS devices in the control of congestion in the power system has been revealed in this paper. The future scope of use of FACTS devices in congestion management has been discussed..

III. Modelling Of Facts Devices

3.1. Modelling Of TCSC: [3]

The injection model describes the FACTS devices as a tool that injects a precise quantity of active and reactive power to a node, so the FACTS devices are given as PQ components. Throughout steady state operation, TCSC is thought of as a further reactance $-jxc$. The worth of xc is adjusted according to control scheme such that. Fig.1(a) shows a model of transmission line with one TCSC that is connected between bus-i and bus-j.[3] the road flow modification is because of series capacitance that is represented as line while not series capacitance with power injected at the receiving and sending ends of the line as shown in"Fig.1(b)".

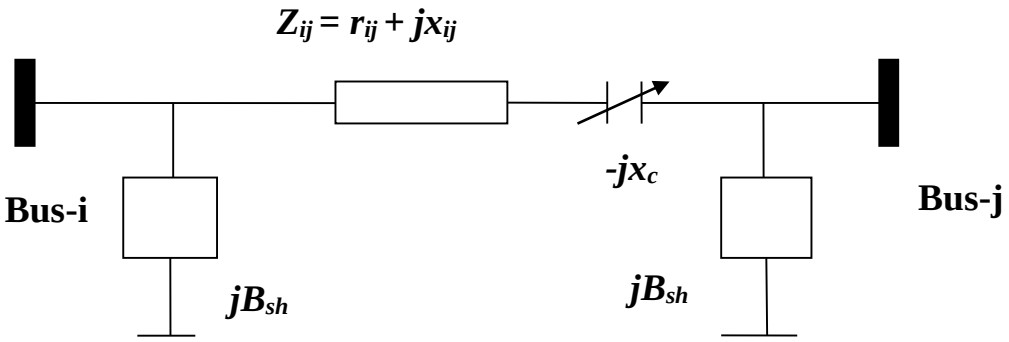

Fig.1 (a): The TCSC model

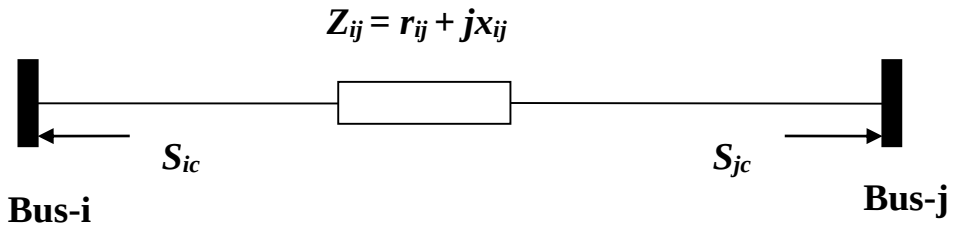

Fig.1 (b): Injection model of TCSC [6]

The real power injection at bus i and bus j are given by "Eqn. (1-4)", are as follows:

$$P_{ic} = V_i^2 \Delta G_{ij} - V_i V_j \left[\Delta G_{ij} \cos\delta_{ij} + \Delta B_{ij} \sin\delta_{ij} \right] \quad (1)$$

$$P_{jc} = V_j^2 \Delta G_{ij} - V_i V_j \left[\Delta G_{ij} \cos\delta_{ij} - \Delta B_{ij} \sin\delta_{ij} \right] \quad (2)$$

Similarly the reactive power at bus i & bus j can be expressed as:

$$Q_{ic} = -V_i^2 \Delta B_{ij} - V_i V_j \left[\Delta G_{ij} \sin\delta_{ij} - \Delta B_{ij} \cos\delta_{ij} \right] \quad (3)$$

$$Q_{jc} = -V_j^2 \Delta B_{ij} + V_i V_j \left[\Delta G_{ij} \sin\delta_{ij} + \Delta B_{ij} \cos\delta_{ij} \right] \quad (4)$$

Where,

$$\Delta G_{ij} = \frac{x_c r_{ij} \left(x_c - 2x_{ij} \right)}{(r_{ij}^2 + x_{ij}^2)\left(r_{ij}^2 + \left(x_{ij} - x_c \right)^2 \right)} \quad (5)$$

$$\Delta B_{ij} = \frac{-x_c \left(r_{ij}^2 - x_{ij}^2 + -x_c x_{ij} \right)}{(r_{ij}^2 + x_{ij}^2)\left(r_{ij}^2 + \left(x_{ij} - x_c \right)^2 \right)} \quad (6)$$

This model of TCSC is used to properly modify the parameters of transmission lines with TCSC for optimal power flow.

3.2. Modelling Of SSSC:

As shown in Fig. 2, a SSSC sometimes consists of a coupling transformer, an inverter and a capacitor. However, the SSSC is series connected with a line through the coupling electrical device. Operational principle of a SSSC will be found in [2]. In principle, the inserted series voltage will be regulated to vary the impedance (more exactly reactance) of the transmission line. So the power flow of line will be controlled.

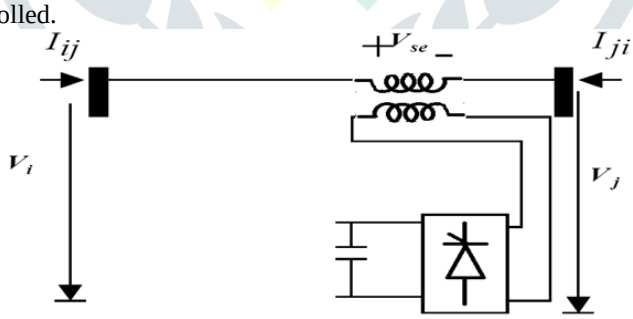

Fig.2: The schematic of SSSC

Suppose $V_i = V_i \angle \theta_i$ and $V_j = V_j \angle \theta_j$, then power flow equations can be established by the "Eqn.(7-10)", as given below:

$$P_{ij} = V_i^2 g_{ii} - V_i V_j \left(g_{ij} \cos\theta_{ij} + b_{ij} \sin\theta_{ij} \right)$$
$$- V_i V_{se} \left(g_{ij} \cos\left(\theta_i - \theta_{se}\right) + b_{ij} \sin\left(\theta_i - \theta_{se}\right) \right) \quad (7)$$

$$Q_{ij} = -V_i^2 b_{ii} - V_i V_j \left(g_{ij} \sin\theta_{ij} - b_{ij} \cos\theta_{ij} \right)$$
$$- V_i V_{se} \left(g_{ij} \sin\left(\theta_i - \theta_{se}\right) - b_{ij} \cos\left(\theta_i - \theta_{se}\right) \right) \quad (8)$$

Where,

$$g_{ij} + jb_{i\partial j} = 1/Z_{se} \quad (9)$$

$$g_{ii} = g_{ij}\ ,\ b_{ii} = b_{ij} \quad (10)$$

The approach proposed can simultaneously take voltage, thermal and voltage stability limits into consideration, and may also consider any electricity transaction constraints.

3.3. Modelling Of UPFC:

The UPFC is capable of providing active and reactive power control, additionally as adaptive voltage magnitude control [7]. From the operational purpose of read, the UPFC (Fig.3) may act as a shunt VAR compensator [20] or as a thyristor controlled series compensator or as a phase-shifter controller. The modeling of UPFC will be explained by the "Eqn. (11-14)", as follows:

$$P_k = V_k^2 G_{kk} + V_k V_m \left(G_{km}\cos\left(\theta_k - \theta_m\right) + B_{km}\sin\left(\theta_k - \theta_m\right)\right) + V_k V_{se}\left(G_{km}\cos\left(\theta_k - \theta_{se}\right) + B_{km}\sin\left(\theta_k - \theta_{se}\right)\right) + V_k V_{sh}\left(G_{sh}\cos\left(\theta_k - \theta_{sh}\right) + B_{sh}\sin\left(\theta_k - \theta_{sh}\right)\right) \quad (11)$$

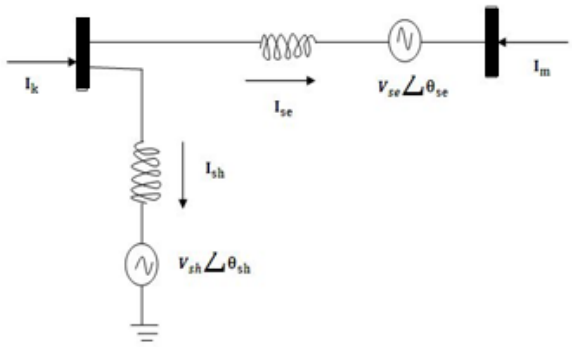

Fig.3: The schematic of UPFC.[20]

$$Q_k = -V_k^2 B_{kk} + V_k V_m \left(G_{km}\sin\left(\theta_k - \theta_m\right) - B_{km}\cos\left(\theta_k - \theta_m\right)\right) + V_k V_{se}\left(G_{km}\sin\left(\theta_k - \theta_{se}\right) - B_{km}\cos\left(\theta_k - \theta_{se}\right)\right) + V_k V_{sh}\left(G_{sh}\sin\left(\theta_k - \theta_{sh}\right) - B_{sh}\cos\left(\theta_k - \theta_{sh}\right)\right) \quad (12)$$

Active and reactive power at bus –m:

$$P_m = V_m^2 G_{mm} + V_k V_m \left(G_{mk}\cos\left(\theta_m - \theta_k\right) + B_{mk}\sin\left(\theta_m - \theta_k\right)\right) + V_k V_{se}\left(G_{mm}\cos\left(\theta_m - \theta_{se}\right) + B_{mm}\sin\left(\theta_m - \theta_{se}\right)\right) \quad (13)$$

$$Q_m = -V_m^2 B_{mm} + V_k V_m \left(G_{mk}\sin\left(\theta_m - \theta_k\right) - B_{mk}\cos\left(\theta_m - \theta_k\right)\right) + V_k V_{se}\left(G_{mm}\sin\left(\theta_m - \theta_{se}\right) - B_{mm}\cos\left(\theta_m - \theta_{se}\right)\right) \quad (14)$$

Where,

V_k, θ_k : Voltage magnitude and phase angles of sending end bus-k

V_m, θ_m : Voltage magnitude and phase angles of sending end bus-m

V_{se}, θ_{se} : Voltage magnitude and phase angles of Series converter.

V_{sh}, θ_{sh} : Voltage magnitude and phase angles of Shunt converter

IV. Allocation Of Facts Devices

The objective of FACTS devices is to regulate power flow in order that it flows through the selected routes, increase line capability to its most thermal limit, and improve the safety of gear with smallest infrastructure investment and environmental impact. Analysis has been finished optimal location of FACTS devices like TCSC, SSSC and UPFC. Thyristor Controlled Series capacitor (TCSC) is A rising FACTS device to reduce the congestion [11]. Allocation of facts devices in deregulated power grid is obtained and optimum location of TCSC & SSSC is found for preventive / corrective control strategy against voltage collapse in market based mostly system. The drawback is solved by hybrid PSO quadratic programming [1]. a technique planned to work out optimum location and best setting of TCSC. Seeking the best place is performed using the sensitivity analysis and optimum setting is managed using Genetic algorithmic rule [17] SSSC is employed for congestion management and for increasing the power transfer capability of installation with high penetration of wind generation using non linear interior purpose methodology by satisfying voltage stability and voltage security constrains [2] ..

For finding the optimum generation schedule, location & size of TCSC a completely unique genetic algorithmic rule is planned for congestion management with the aim of increasing social welfare whereas value of TCSC is incorporated [3]. A particle swarm

optimization based mostly algorithmic rule for locating series FACTS device (TCSC) in deregulated electricity markets so as to reduce & manage congestion. Line outage sensitivity factors are planned to reduce the solution area and to search out the optimum location of FACTS device (TCSC) [6]. to search out the entire congestion value, initial AN OPF is performed. Using the results of this OPF, flow of every line and LMPs are calculated. Then, total congestion value will be computed by "Eqn.(15-16)", as follows:

$$\text{TCC} = \sum_{ij=1}^{NL} \Delta\rho_{ij} * P_{ij} \qquad (15)$$

where P_{ij} is the power flow of line ij , NL is the number of the transmission lines and $\Delta\rho_{ij}$ is:

$$\Delta\rho_{ij} = \left| LMP_i - LMP_j \right| \qquad (16)$$

A general two-step improvement methodology, capable of determining the optimum rating of a FACTS controller whereas relieving congestion via effective control of the flow of active and reactive power is often used now a days.[8] [9]. Then a general sensitivity based mostly three-step improvement methodology is more developed to include sensitivity analysis, capable of determinant each the best location and rating of a FACTS controller effectively, for the congestion management of networks below a deregulated electricity market surroundings [8].

In paper [20] , K.Arun kumar Reddy, discusses a evaluation based mostly approach that makes use of Locational Marginal price difference and congestion rent for determination of appropriate location of UPFC using interior purpose technique.

In [22] Prakash g.burade , presented however congestion is relieved using genetic algorithmic rule for optimizing the varied method parameters concerned in introduction of FACTS devices in a very power grid. He took numerous parameters into thought just like the location of the device, their type, and also the rated price of the devices. Four differing types of devices are simulated: TCSC, TCPAR, SVC and UPFC. The system real power loss reduction, significantly improves the system performance. To relieve the congestion within the lines multiple, multi-types of FACTS devices were placed optimally using genetic algorithmic rule [24].

Further ,K.S. Verma et. al, in his paper [23], developed a sensitivity-based approach for locating appropriate placement of UPFC. Firstly, the situation of those devices within the network was observed so; the settings of its control parameters were optimized.

V. Congestion Management Through Facts Devices By Voltage Stability Of The Power System

Apart from congestion management through allocation of FACTS devices, authors have planned some ways. One in all the ways is helpful the voltage of the power system.

Modern power systems are at risks of voltage instability issues because of extremely stressed operational conditions caused by enhanced load demand and economical and/or environmental constraints within the construction of latest transmission lines. A particle swarm optimization (PSO) formula based mostly best reactive power coming up with task incorporating static VAR compensator (SVC) and thyristor controlled series capacitor (TCSC) FACTS devices under contingency condition. PSO is economical in exploitation of solutions of the search area of the matter and straightforward to implement [12]. Best settings of control variables of generator voltages, transformer tap settings and site and parameter settings of SVC and TCSC are thought-about for reactive power flow control and therefore the resultant reactive power reserves.

VI. Real And Reactive Power Dispatch For Zonal Congestion Management Using Facts Devices

The real and reactive power redispatch plays a very important role in deciding the price of generation & transmission .In different words the financial efficiency of a power system depends upon however the important & reactive power is scheduled by affected re-dispatch of the generators. The congestion management technique thought of is predicated on an affected re-dispatch of generation schedule that are shaped by the market. From the re-dispatch, the congestion management price is evaluated. The installation and operation of the FACTS devices within the transmission network so as to alleviate congestion and minimize the quantity of active power that must be redispatched [13].

The re-dispatch drawback is developed as an optimization drawback with 2 totally different objectives. One objective is to reduce the quantity of absolute re-dispatched generation. During this case the difference between the scheduled and rescheduled dispatches is decreased, as shown by the "Eqn. (17-21)" follows:

Minimize:

$$J = \sum_{i=1}^{NG} \left(\Delta P_i^{+} \right) + \sum_{j=1}^{NG} \left(\Delta P_j^{-} \right) \quad where \quad i \neq j \qquad (17)$$

The other objective is to minimize the cost of congestion management which in our case is the net payment by ISO for regulating generators to remove congestion. The objective function can be formulated [13] as below:

$$\text{Congestion cost} = \sum_{i=1}^{NG} \left(\Delta P_i^{+} \right) * \rho^{+} + \sum_{j=1}^{NG} \left(\Delta P_j^{-} \right) * \left(\rho_m - \rho^{-} \right) \qquad (18)$$

With the following constraints:

a) line flow limits

$$\sqrt{P_{ij}^2 + Q_{ij}^2} \le S_{ij}^{\max} \quad (19)$$

b) bus voltage limits

$$V_i^{\min} \le V_i \le V_i^{\max} \quad (20)$$

c) Generator active power limits

$$P_i^{\min} \le P_i \le P_i^{\max} \quad (21)$$

The re-dispatch of transactions for congestion management during a pool model will be developed as a nonlinear Programming (NLP) .Then Fitness Distance ratio Particle Swarm optimization based mostly optimal Power Flow (FDRPSO-OPF) is employed to resolve the NLP. the standard PSO (CPSO) oscillate in damped curved waves till they converge to points in between their previous P^{best} and G^{best} positions that prevent the particles from effective search for the global optimum .The solution for this drawback is recommended by . X. P. Zhang et.al. in [8] ,FDRPSO-OPF[5],

The re dispatch of generator can even be done by using generator programming prediction management technique .This technique is also referred to as stagecoach approach to relieve the congestion under real power bilateral transactions.[14]. This congestion management technique might specifically determine the generators wherever corrective measures are to be taken for relieving transmission congestion.

Extended Quadratic Interior purpose technique is employed for Congestion management that is relieved by alleviation of overload in line and by load shedding using FACTS devices.[15]. Generation rescheduling primarily based congestion management approach has been applied alongside the voltage stability constraint taken as laudability parameter using FACTS devices. An optimum power flow drawback using non linear programming approach has been solved by using CONOPT problem solver of GAMS with MATLAB interfacing [16]. an organic process programming (EP) technique primarily based optimum power flow is projected in paper [18] by Elango. K., S. for transmission congestion management in deregulated power system using FACTS devices, generation rescheduling, and load shedding compared with improved Quadratic Interior purpose technique primarily based OPF.

K.Vijayakumar suggested an formula for congestion management using OPF in [19] and solved it by using GA to search out the global optimal generation schedule for increasing the social welfare and line overloading drawback is solved. The varied strategies of mitigating the losses within the Operational part are given by Julluri Namratha Manohar in [21] with emphasis on one technique – the versatile AC transmission system devices. Power Flow studies were disbursed by using Power World machine and MATLAB. When putting of TCSC power flow information was obtained and compared with the base case values. Paper [25] presents the application of FACTS devices (UPFC) to face the congestion drawback .Using sensitivity factors, e.g. generation shift distribution factors (GSDF) the set point values of the UPFC are calculated and so adjusted for congestion management.

VII. Conclusion

This paper has reviewed the wants of FACTS applications for future transmission systems with high penetration of renewable generation everywhere the world. Then general principles of congestion management, that depend on market models, market policy and electricity network conditions, are discussed. In reference to this, varied congestion management approaches that are applied in numerous electricity markets are reviewed and compared.

References

[1] Rony Seto Wibowo, Ardyono Priyadi, Adi Soeprijanto , Naoto Yorino ,"FACTS Devices Allocation for Prev entive/Corrective Control Against Voltage Collapse Under Deregulated Power System." 978-1-4577-0255-6/11, tencon 2011.

[2] Liangzhong yao, phill cartwrit , Laurent Schmitt , Xiao Ping Chang."Congestion management of transmission system using FACTS" , 2005, IEEE/PES , Transmission and distribution conference & Exhibition Asia & Pacific , Dalian , China

[3] Nazanin Hosseinipoor, Syed M.H Nabavi," Optimal Locating and Sizing of TCSC Using Genetic Algorithm for Congestion Management in Deregualted Power Markets", IEEE Trans, power delivery 2007

[4] V.P.Rajderkar, V.K.Chandrakar, "Comparison of Series FACTS Devices Via Optimal Location in a Power System for Congestion Management", 978-1-4244-2487-0/09, IEEE Trans. 2009.

[5] E. Muneender , D. M. Vinod Kumar, " A novel based OPF for zonal congestion management using optimal real and reactive power dispatch", IEEE Trans., 2007

[6] Hossein Hashemzadeh, Seyed Hamid Hosseini, "Locating Series FACTS Devices Using Line Outage Sensitivity Factors and Particle Swarm Optimization for Congestion Management", 978-1-4244-4241-6/09, IEEE 2009.

[7] Xian-Ping Zhang & Lianzhong Yao, " A vision of electricity network congestion management with FACTS and HVDC ," DRPT 2008 6-9 April 2008 Nanzing, China.

[8] X. P. Zhang, B. Chong, K. R. Godfrey, L. Yao, M. Bazargan, L. Schmitt ,"Management of Congestion Costs Utilizing FACTS Controllers in a Bilateral Electricity Market Environment," 978-1-4244-2190-9/07, IEEE Trans., PowerTech ,2007.

[9] B.mozafari, a.m. Ranjbar, a.r. Shirani & a.mozafari,"Reactive power management in a deregulated power system with Considering voltage stability: particle swarm optimisation approach", 18th International Conference on Electricity Distribution , Turin, 6-9 June 2005, C I R E D

[10] C. Rehtanz , IEEE and U. Häger ," Coordinated Wide Area Control of FACTS for Congestion Management," DRPT2008 6-9 April 2008 Nanjing, China.

[11] P. Ramasubramanian, G. Uma Prasana & K. Sumathi,"Optimal Location of FACTS Devices by Evolutionary Programming Based OPF in Deregulated Power Systems, British Journal of Mathematics & Computer Science 2(1): 21-30, 2012.

[12] S. Sakthivel, D. Mary, M. Deivarajamani ,"Reactive Power Planning for Voltage Stability Limit Improvement with FACTS Devices in Most Critical Contingency Condition", European Journal of Scientific Research ISSN 1450-216X Vol.66 No.3 (2011), pp. 408-420.

[13] Kennedy Mwanza, You Shi, Le Anh Tuan,"Economic Evaluation of FACTS for Congestion Management in Pool Markets", 978-1-4244-2190-9/07,IEEE.

[14] Dr. N. Kamraj & S Venktation,"Dynamic rescheduling model for congestion management with real power transaction", 978-981-05-9423-7,RPS

[15] Elango.K, Paranjothi.S.R, Sharmeela.C : "Congestion management in restructured power systems by FACTS devices and load shedding using Extended Quadratic Interior point method" international journal of applied engineering research, dindigul volume 2, no 2, 2011

[16] Charan Sekhar, Ashwani Kumar "Congestion Management in Hybrid Electricity Markets with FACTS Devices with Loadability Limits", International Journal of Electrical and Computer Engineering (IJECE) Vol. 2, No. 1, February 2012 .

[17] Abouzar Samimi, Peyman Naderi ,"A New Method for Optimal Placement of TCSC Based on Sensitivity Analysis for Congestion Management ", Smart Grid and Renewable Energy, 2012, 3, 10-16 doi:10.4236/sgre.2012.31002 Published Online February 2012.

[18] Elango. K., S. R. Paranjothi. "Power Transmission Congestion Management in Restructured Power System by FACTS Devices", Generation Rescheduling and Load Shedding using Evolutionary Programming European Journal of Scientific Research ISSN 1450-216X Vol.56 No.3 (2011), pp.376-384.

[19] K.Vijayakumar ,"Optimal Location of FACTS Devices for Congestion Management in Deregulated Power Systems", International Journal of Computer Applications (0975 – 8887) Volume 16– No.6, February 2011

[20] K.Arun kumar Reddy,S.P.Singh and G.S. Raju, "Optimal allocation of UPFC for congestion management using interior point method" ; 16 National power system conference.,2010.,

[21] Julluri Namratha Manohar Amarnath Jinka Vemuri Poornachandra Rao, "Optimization of Loss Minimization Using FACTS in Deregulated Power Systems" ; Innovative Systems Design and Engineering 2012

[22] prakash g.burade, Dr.j.b.helonde ,"using genetic algorithm method for Optimal location of facts devices in the Deregulated power system; Journal of theoretical and applied information technology

[23] K.S. Verma , S.N. Singh , H.O. Gupta ,"Location of unified power flow controller for congestion Management" Electric Power Systems Research 58 (2001) 89–96.

[24] Deependra Singh and K. S. Verma , "GA-based Congestion Management in Deregulated Power System using FACTS Devices" ,IJEE, 2007.

[25] J. Brosda, E. Handschin, C. Leder, M. Trovato Visualization for a Corrective Congestion Management based on FACTS Devices ", IEEE Trans ,2007.

.