Design and Simulation of a Smart Traffic System in a Campus Community.

[1]Victor O. Matthews, [2] Uzairue Stanley Idiake, [3]Etinosa Noma-Osaghae, [4]Frances Nwukor

[1]Designation of 1st Author, [2]Designation of 2nd Author, [3]Designation of 3rd Author
[1, 2, 3]Department of Electrical and Information Engineering,
[1, 2, 3]Covenant University, Ota, Ogun State, Nigeria
[4]Department of Electrical and Electronic Engineering,
[4]Petroleum Training Institute, Effurun, Delta State, Nigeria

Abstract : ***Road traffic within campus communities has increased tremendously. More persons are now moving around campuses with vehicles than previously recorded. This development will pose a major traffic challenge if it is not addressed urgently. Standard technologies for traffic management in campus communities do not have a computerized framework that can control traffic based on detected level of congestion. The main purpose of this research is to propose a more efficient and effective system for road traffic management in a campus community. The system is completely automated and can manage the ever mounting traffic in campus communities. The proposed campus traffic management system was simulated using Proteus®. Tests carried out on the simulated real-life campus traffic scenario confirmed that the proposed campus traffic management system was better than conventional traffic control systems in existence on campuses.***

IndexTerms – Automatic, Traffic management, Piezo-electricity, RFID, Tags, Simulation, Campus, Vehicle

I. INTRODUCTION

The Smart City is a term with a specific end goal, to make an intelligent city and enhance the personal satisfaction of individuals. Transportation is one of the benchmarks used to determine if a city is smart [l]. Transportation is a unique necessity and in most campuses, ownership of vehicles has increased exponentially. This has led to an equally large increase in traffic volume across campuses. The problem of traffic congestion and long waiting queues are quite common especially during grand events in various campus communities [2]. There is a pressing necessity for a smart traffic management system that will automatically control the traffic on campuses and attempt to lessen blockage to a minimum and minimize mishaps. A smart traffic management system should be able to deal with congestion recognition and evasion, crisis control, vehicle safety and accident avoidance. The proposed traffic management system attempts to cut down on power consumption and power cost by making use of solar panels and speed bumps fitted with piezo-electric technology [3][4] that converts sound and pressure into electrical energy. This gives the system redundancy in terms of power supply. The proposed smart traffic management system takes care of road activity issues by using sensors to ascertain the level of road congestion and taking actions to alleviate traffic jams. Moreover, the system will allow communication among traffic lights [2-11]. This goal of the proposed traffic management system is to supplant the conventional traffic management system on campus [5].

Generally, the two major categories of road traffic intersection are the "Three-way intersection" and the "Cross intersection". The Three-way intersection is formed by three sections of roads linked together. The link forms a "T" shape. One section is usually a minor traffic road and the other section is a major traffic road. The angle between the sections of the Three-way intersection is usually ninety degrees as described by Figure 1. Figure 2 depicts "a cross intersection" with four roads meeting at a point.

Figure 1: A Three-way Intersection with a 'T' shape in Covenant University Nigeria

Figure 2: A Cross Intersection at the Entrance of Covenant University, Nigeria

II. Traditional Traffic Control System

Traffic congestion can turn into a major issue these days. This is particularly true in urban communities and settings. When road users reach a junction, there is a contention about "who might go first" at the back of their minds. Because of the increased number of vehicles on the road, junction points require a traffic signaling gadget or device to control the traffic stream [8]. Traffic signaling is utilized to guarantee the smoothness of traffic streams by giving direction to road users. With express directions from traffic signals, road users are allowed to cross junction points. The vehicles of road users expend a considerable measure of energy hanging tight at junctions for instructions on when to move. But conventional traffic signaling gadgets are not smart enough to control very large vehicular traffic. There are different kinds of traditional traffic control schemes around the world. A traffic police standing at a junction and automatic traffic control signals are examples [6].

III. Traffic Police

A traffic police controlling traffic at intersections is the least difficult and most established strategy utilized for traffic administration. It is basically the incorporation of a human in the traffic framework. The traffic officer is put on every single intersection segment of the road, and he directs the flow of traffic. The individual uses gesticulations and sometimes, verbal communication to control traffic. Furthermore, the officer generally screens the road. In the light of his own insight, he decides who should go and who should stop [7].

Figure 3: A Police Officer Standing at an Intersection and Controlling Traffic [3]

This technique is the most effective amongst other systems for less congested roads [9]. But this technique offers only an average solution for heavy traffic situations and round the clock efficiency, as it is known that humans are prone to fatigue and mistakes.

IV. Automated Traffic Signaling

The conventional automatic traffic signaling system has been used for over six decades. This conventional traffic control system has formed the bedrock for better traffic control solutions. In general, traffic indicating devices are infrastructural assets used to control vehicular and pedestrian traffic. The automated traffic signal framework includes three simple colored traffic signals. [9] Usually an average of 60 seconds green light is allocated to each lane. A yellow light appears before the green light, for l0 seconds, signaling drivers to start their automobiles and get set to go. Whenever the green light is flicked on in a lane, all other lanes will display a red light. Figure 4 shows a sample of an automated traffic signaling system. The red indicator means stop, yellow means get ready to go, and the green light indicates go. The main problem with the conventional traffic scheme is its inability to gauge traffic volume on each lane and so there is still the probability of traffic congestion [10].

Figure 4: A Conventional Traffic Signaling Gadget

V. Research Methodology

In this research, an automated smart traffic control system design based on a network remote sensor is proposed. An assumption of junctions or intersections with rectilinear framework is taken into consideration. An open system is utilized to show the traffic stream between the multiple junction points. The mean speeds of all the junctions are thought to be constant. `The lengths of possible queues for each lane for all active directions are set to zero. The vertical or horizontal distance across any pair of junctions or intersection is presumed to be constant and equal to a fixed distance (d). Therefore, the relationship between traffic flow, traffic congestion and speed is given in the equation below.

$$F = KS \qquad (1)$$

F = Flow of vehicles per hour
S = Speed of vehicles
K = Density of vehicles/kilometer

The automated system is broken down into four aspects: a network of sensors to analyze the signals received from the vehicles in motion or stationary, a processor powerful enough to process the received data, a data transmission unit to transmit the analyzed data to a central control center and an energy source. The design seeks to reduce unnecessary waiting. Consider the scenario: in an intersection with 4 lanes, (Ll, L2, L3, L4) and all lanes have a total of 60seconds for the green light to be on, the lane with the fewest numbers of cars would have its time reduced by 20% i.e. if the number of cars in (Ll=4, L2=6, L3=8, L4=9) Ll would have its time reduced.

VI. Proposed Model

The use of Radio Frequency Identification (RFID) technology is employed in this model [12]. The RFID reader is mounted on the poles of the street lights and traffic light poles. The RFID tag is modified to magnetic stickers and placed on bumpers or hind ends of vehicles entering the campus community. The tags are active. This creates a network of RFID tags and readers; a very broad field range. The Active tag is employed for this task because it has its own power supply for transporting feedback signal to the RFID reader. The active tag is also used because it has a wide coverage and would operate using the UHF (Ultra High Frequency) range l0-l5Mhz. The active tag will convey data concerning the position of the car within the campus community [13]. The RFID network enable vehicles to send and get data from light poles fitted with sensors on the road. Signals from vehicles will convey information, for example, car ID, car position etc.

When a vehicle passes RFID reader R1, which is placed at the entry point of the campus community, the RFID tag placed on the vehicle transmits signal data to the reader. The transmitted data contains basic information about the vehicle and its user. Vehicles are registered and given a time stamp the moment they cross the first reader. After a vehicle passes the first reader, its speed and position can be determined by other readers. All information about vehicles within the campus are collected from readers, processed and stored in a data farm. The processing unit could be a microcontroller or microprocessor selected on the basis of projected peak traffic flow. The 805l or LCP 2l4 microcontroller can be used as a processing unit [14]. They have the additional advantage of an internal memory. They are simple and their predefined parameters could be set to carry out the processing function satisfactorily. At intersections, data regarding traffic volume on every road leading to the intersection is gathered. The readers on all roads leading to the intersection gather this data and forward it to the processing unit. The processing unit analyses the data from various readers positioned on the roads and estimates the volume of vehicles in motion on the road. In addition, the major advantage of utilizing an automated RFID reader and tag system for traffic management is the ease of setting priorities for different vehicle types depending on the sort of vehicle. For instance, the amount of time an emergency vehicle or campus security vehicle may need to wait in front of the traffic light can be limited. Traffic on other roads leading to the intersection may be stopped for a couple of moments, giving these high need vehicles a chance to pass. Priority can likewise be allocated as indicated by the time. For instance, trucks are given higher priorities after 12pm. To make the system truly automated and minimize human contact, a redundant power system is employed. The power system makes use of piezo-electric technology. Piezo-electric elements are embedded or fitted underneath speed bumps close to the traffic intersection or at zebra crossings to generate auxiliary or alternative electricity to power the smart traffic management system. It could also power smart light poles that can serve as a source of illumination at night.

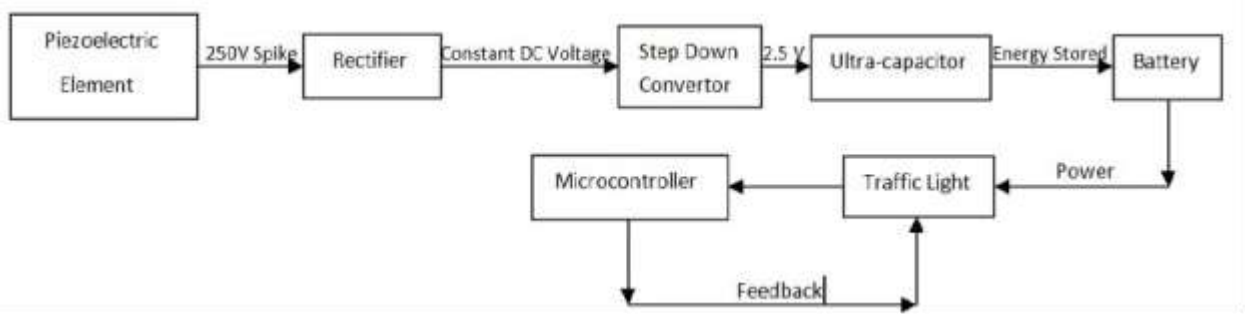

Figure 5: Block Diagram of Alternative Power Supply for the Proposed Traffic Management System

Figure 6: Positions of Proposed RFID Vehicle Traffic Readers in Covenant University

VII. Simulation Results

Proteus® is a software package utilized by electronic designers for automation and simulation of proposed works. It is common among electronic technicians who use it to create schematics and electronic prints for manufacturing printed circuit boards.

Vissim® is software that helps simulate traffic patterns. The software displays all road users and their interactions with the traffic environment. Various motion models give a more realistic prototype of all road users.

The Simulation was run using the Proteus® and Vissim® software. The simulation in Proteus® shows the working of the proposed traffic signaling system. It also shows how traffic congestion is managed at an intersection. The simulate result was achieved by writing lines of code in assembly language and using a microcontroller, ATMEGC5l to process data from the traffic lights and a traffic algorithm. The traffic algorithm was used to create a logic that made it possible for the traffic lights to adapt to variations in traffic conditions. Figure 6 shows the graphic design made using Vissim®. The yellow arch lines show the proposed position of Piezo-electric fittings which could be incorporated into the design to serve as an auxiliary power supply to the traffic management system in case of power failure. Figure 8 and Figure 9 shows the simulation result of the proposed traffic management system.

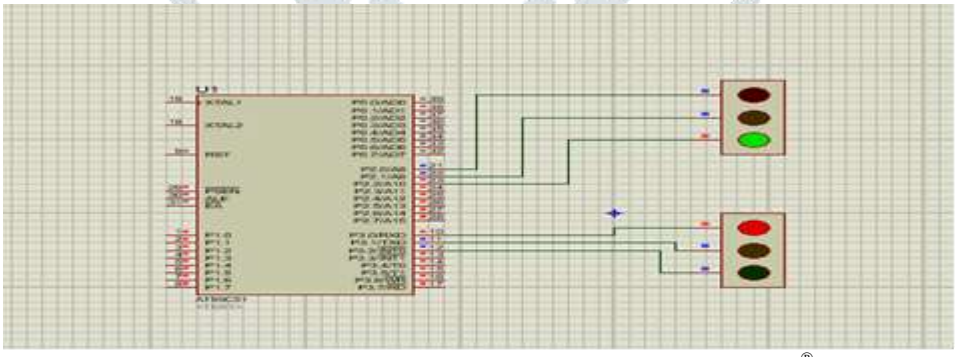

Figure 7: A Simulated Traffic Signaling System using Proteus®

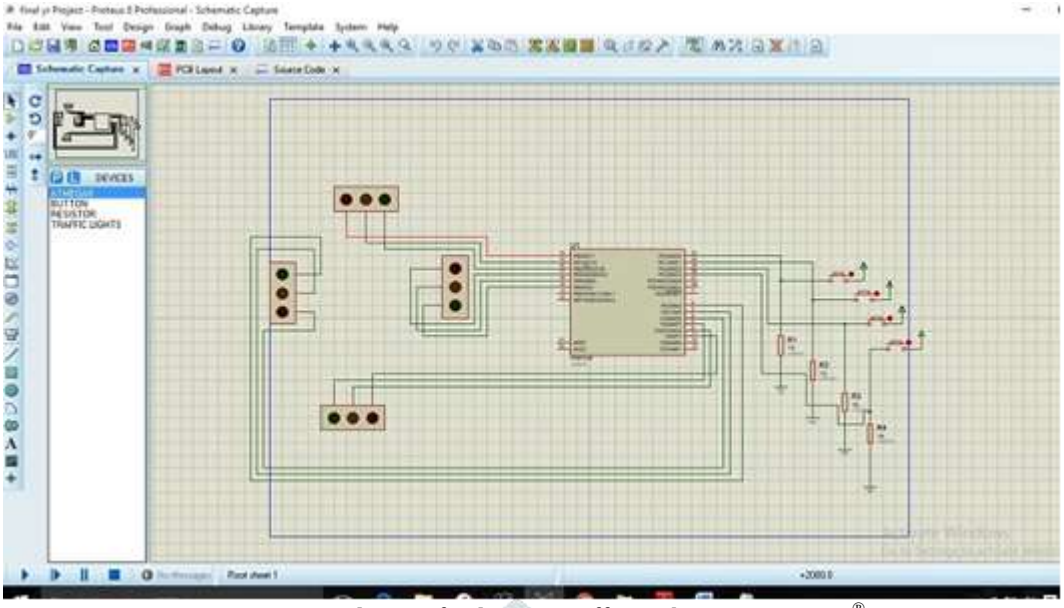

Figure 8: Simulation of Adaptive Traffic Lights using Proteus®

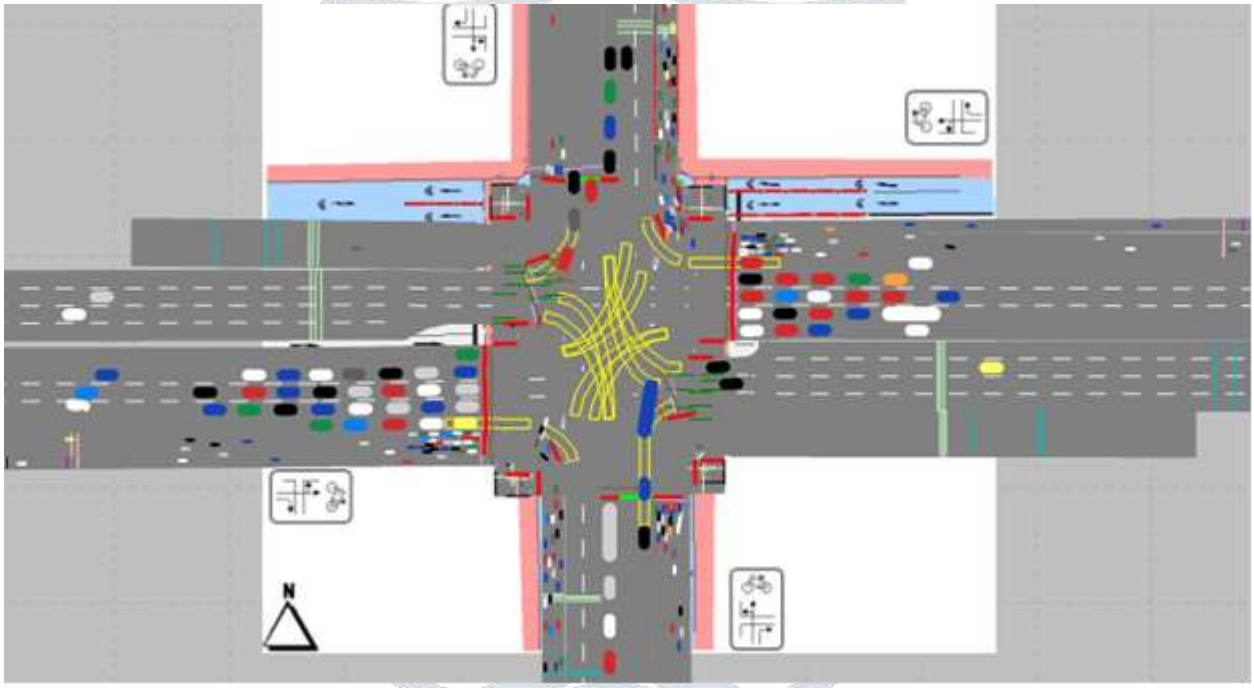

Figure 9: A Screen Shot the Simulated Proposed Campus Traffic Management System.

Conclusion

At the centre of the vision to build smart cities is the design and implementation of a real-time traffic management system that is intelligent. This is pivotal for the management of traffic congestion especially during rush hours. The campus traffic management system proposed in this study can help diminish traffic congestion and improve the flow of traffic tremendously. The proposed traffic management system is a big departure from the conventional automatic traffic signaling gadgets. It can operate without any human interference. The various traffic information gathered are analyzed by the traffic management centers in the campus community to aid the autonomous control of traffic within the campus. Development and planning agencies can also make use of the blueprint of the proposed traffic management system to plan for the construction of future roads.

REFERENCES

[1] (IJACSA) International Journal of Advanced Computer Science and Applications, Vol. 7, No. 2, 20l6

[2] B. Bowerman, J. Braverman, J. Taylor, H. Todosow, and U. Von Wimmersperg, "The vision of a smart city," in 2nd International Life Extension Technology Workshop, Paris, 2000.

[3] Power Electronics, IEEE, VOL. l8, NO. 2, MARCH 2003.

[4] International Journal of Scientific & Engineering Research, Volume 4, Issue 7, June 20l3 ISSN 2229-55l8

[5] Zhao, Y. & Tian, Z "An Overview of the Usage of Adaptive Signal Control System". Applied Mechanics and Materials Volumes l78-l8l, pp. 259l-2598 20l2..

[6]Its America Emergency Vehicle Signal Pre-emptionSystems,Website.[Online]HTTP://WWW.ITSA.ORG/COMMITTEE.NSF/

[7] Vivek, Tyagi, Shivakumar Kalyanaraman, and Raghuram Krishnapuram, "Vehicular Traffic Density State Estimation Based On Cumulative Road Acoustics" in IEEE Transaction on Intelligent Transportation System.Vol.23. No.3 September 20l2.

[8] Mirchandani, P. & Head, L., A Real-Time Traffic Signal Control System: Architecture, Algorithms and Analysis. Transportation Research Part C, pp. 4l5-432 200l.

[9] H.R.Kashani and G.N.Saridis "Intelligent Control for Urban Traffic Systems" International Federation of Automatic Control Automatica, vol.l9, No.

[l0] M.R. Thansekhar and N. Balaji (Eds.): ICIET'l4 "Density based traffic signal system"

[11] Anyasi Francis et al (2018) "Design and Analysis of a Broadcast Network Using Logical Segmentation" TELKOMNIKA, Vol.16, No.2, April 2018, pp. 803~810

[12] V. O. Matthews, A. I. Adekitan, U. S. Idiake, and E. Noma-Osaghae, "Wireless Intelligent Electricity Metering and Billing System (WIMBIS)."

[13] V. O. Matthews, S. I. Uzairue, E. Noma-Osaghae, M. K. Enefiok, and P. J. Ogukah, "Implementation of a Community Emergency Security Alert System," *Implementation of a Community Emergency Security Alert System,* vol. 3, pp. 475-483, 2018.

[14] V. O. Matthews, E. Noma-Osaghae, and S. I. Uzairue, "An Analytics Enabled Wireless Anti-Intruder Monitoring and Alarm System," *International Journal of Scientific Research in Science, Engineering and Technology,* vol. 4, pp. 5-11, 2018.