DESIGN AND DEVELOPMENT OF ACTIVE POWER FACTOR CORRECTION BASED ZETA CONVERTER FOR POWER QUALITY ENHANCEMENT IN BRUSHLESS DC MOTOR DRIVE

[1]Shweta Gund, [2]Mr. Sachin Shelar,
[1]PG Student, [2]Assistant Professor
[1] Department of Electrical Engineering, AISSMS IOIT, Pune, India.
[2] Department of Electrical Engineering, AISSMS IOIT, Pune, India.

Abstract : Today's many applications, increasing in building controls and industrial automation rely on brushless DC (BLDC) motor. The BLDC motor drive is facing the problem of power quality (PQ) disturbances at AC mains, due to non linear devices like rectifier. Hence, current and voltage does not have a linear relationship and highly distorted current is drawn from the supply which, increases total harmonic distortion (THD) and results in poor power factor (PF). For improving PF and to reduce THD, current must be drawn from the supply which is in phase with voltage and have pure sine wave. There are various converters used for power factor correction, called improved power quality converters to get enhanced power factor with reduced harmonic distortion.

This paper focuses on design of active power factor correction based zeta converter and its controller to improve the poor PF and to reduce THD. The ZETA converter is controlled by voltage follower approach control and operates in discontinuous inductor current mode (DICM). The voltage follower controller needs only one voltage sensor for sensing the dc link voltage and has the voltage feedback loop, which regulates the output voltage. By implementing the single control loop, here source current drawn from supply is in phase with supply voltage. The prototype of zeta converter fed BLDC motor drive using active PFC controller has been developed for supplying load of 60W at 24V dc. Analysis has been carried out for without PFC and proposed system, which proves that THD is reduced from 40.9% to 15.9% with PF improvement to 0.94. And hence the proposed drive operates with improved power quality at AC mains.

Index Terms - : Brushless DC motor (BLDC) drive, Power Factor Correction (PFC), ZETA converter, Non linear, Power factor (PF), Total harmonic distortion (THD).

I. INTRODUCTION

Nowadays cost and efficiency are the major concerns in designing and developing low-power applications, such as household devices, industrial tools, heating, air conditioners, ventilation and many other. BLDC motors have been widely used in such applications. The BLDC motor drive uses the front end diode bridge rectifier. Nonlinear current drawn by these devices affects the power quality adversely. The circuit diagram of conventional diode bridge rectifier which is used to feed BLDC motor is shown in the fig.1. The input circuit consists of full wave rectifier next to a high dc link capacitor, which is able to maintain voltage near the peak of input wave until the next peak comes along to recharge the dc link capacitor [7].The current is drawn from the input supply and this current pulse must have sufficient energy to withstand the load while the upcoming peak come. During the current pulse capacitor is charged in a short time and gradually discharge energy into the load until the cycle repeats. The current during the pulse must contain the 5 to 10 times of average current [7].This results in poor power factor (0.6-0.8) and also THD is quite high [5].

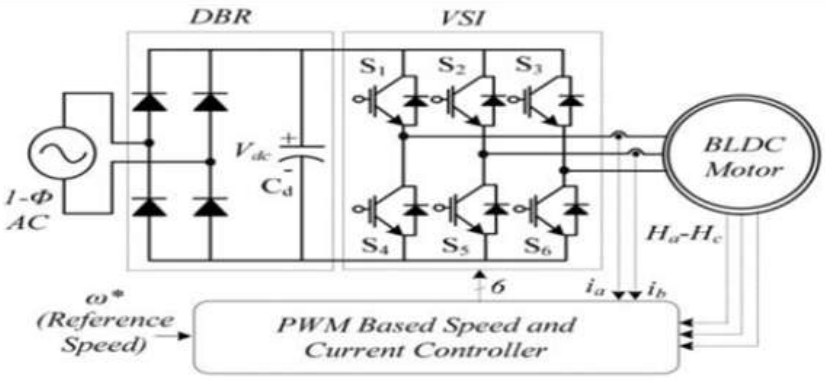

Fig 1 Conventional diode bridge rectifier feeding BLDC motor drive

Single phase rectifier draws nonlinear current as shown in fig 2, which results in high THD and poor PF.

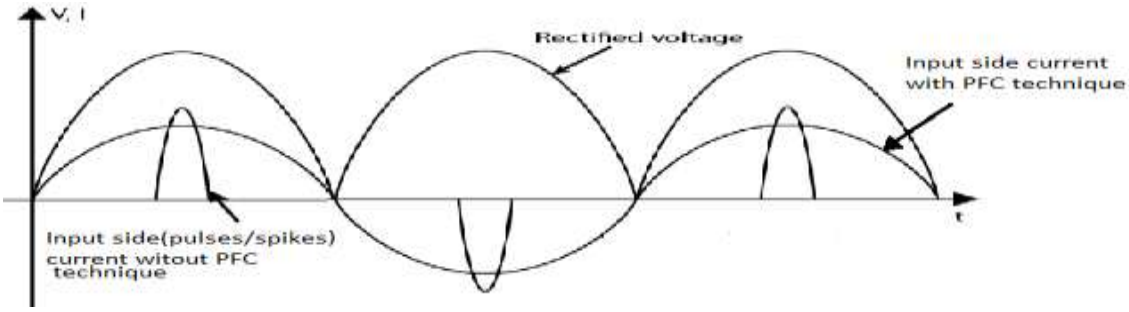

Fig 2 Input side current waveform for BLDC motor with and without PFC technique

Thus, it is necessary to add a circuit in existing BLDC motor drive to improve PF and THD.

To improve the power quality of the system two types of power factor correction techniques are enforced, namely Passive power factor correction technique and Active power factor correction technique. This paper primarily focuses on active power factor correction methodology using zeta converter and the prototype developed for BLDC motor drive. Active power factor correction technique has been explained by designing a zeta converter which improves the power factor using current wave shaping and reduces THD using inductor current, voltage feedback signal [1, 3].

II. PROPOSED SYSTEM BLOCK DIAGRAM

Fig.3 shows the block diagram of active power factor correction based zeta converter fed BLDC motor drive. The system consists of a diode bridge rectifier, LC filter and zeta converter and VSI fed BLDC motor.

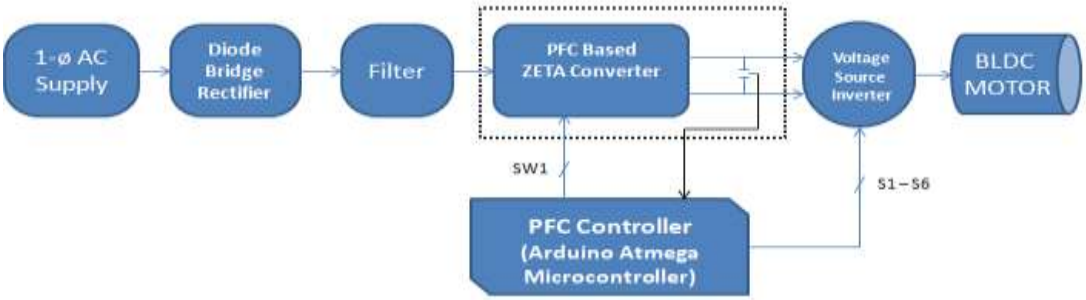

Fig. 3 Block diagram of Active Power Factor Correction based Zeta converter fed BLDC motor drive

In this system, single phase AC supply is rectified by diode bridge rectifier and fed to DC filter which reduces ripples in the supply side. The filter output is given to zeta converter. Zeta converter is heart of the overall system, the switch of zeta converter is controlled by Arduino mega 2560 microcontroller. Voltage follower control approach is used in the system which is implemented by PI controller for voltage control and regulating the dc link capacitor (V_{DC}) .The PI controller output is given to the PWM controller, which generates PWM pulses for zeta converter and controls the overall system [2]. The zeta converter is designed to operate in discontinuous conduction inductor current mode to act as characteristic power factor correction [5]. The electronic commutation is used to reduce switching losses of the voltage source inverter. The microcontroller is programmed to generate the required switching. The output of the microcontroller is given to the gate driver circuit which is used for switching the VSI.

III. HARDWARE SETUP OF ACTIVE PFC ZETA CONVERTER

Hardware setup for zeta active PFC for BLDC motor drive is as shown in fig.4

Fig. 4 Hardware setup of Active PFC based Zeta converter fed BLDC motor drive

Active PFC using zeta converter is implemented by Arduino Mega 2560 microcontroller and components such as MOSFET IRF540, two ferrite core inductor (2.7Mh and 50µH), ceramic capacitor (500µF) and output capacitor. Power factor measurement circuit is implemented by PI technique in Mega 2560 IC with LCD and keypad interfacing. Harmonic analyzer is used for measurement of PF and THD. Circuit works for 60W, 24V BLDC motor and improves the PF.

IV. CONTROL CIRCUIT OF ACTIVE PFC IMPLEMENTATION

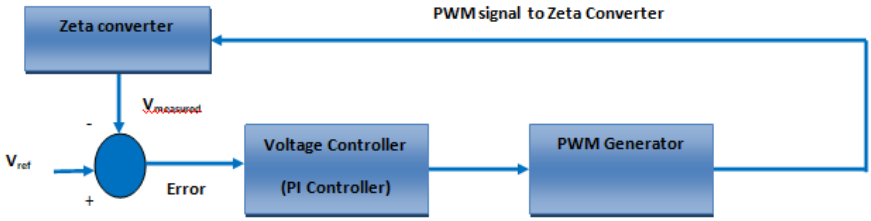

Fig. 5 Control Circuit of Active PFC Implementation

Fig. 5 shows the block diagram control circuit of active PFC implementation. The block diagram consists of a voltage controller and PWM generator. A P.I Controller is a feedback control loop that calculates an error signal by taking the difference between output of a system, which in this case is zeta converter ($V_{MEASURED}$), and the reference voltage value. The output voltage of zeta converter needs to be maintained, so the duty cycle of the MOSFET will increase whenever the voltage drop and decrease whenever the output voltage increase. The PWM output from PWM generator will be fed into the MOSFET driver and to the MOSFET of zeta converter.

V. RESULTS AND DISSCUSION

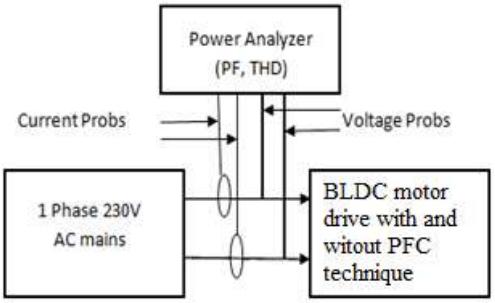

Fig 6: Hardware Test set up

The power analyzer is connected to the system as shown in fig.6 using the current and voltage probs. Improved power factor is observed with minimized THD as shown in table I, with the help of zeta converter using voltage follower approach.

- **HARDWARE RESULTS:**

Table I shows the hardware results of with and without Active PFC based zeta converter fed BLDC motor drive.

Table I: Comparison of hardware results of PF and THD with and without active PFC Technique for BLDC motor drive

Parameters to be measured	Without Active Zeta PFC Technique	With Active Zeta PFC Technique
VI waveform	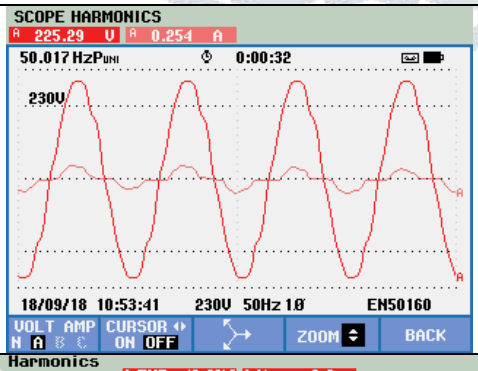	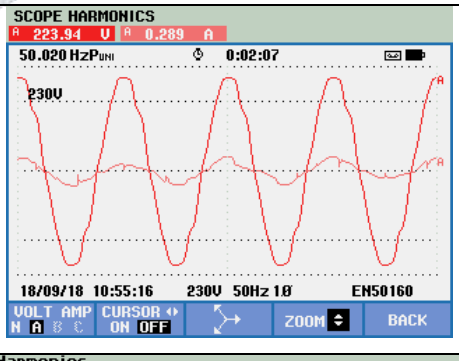
I_{THD}	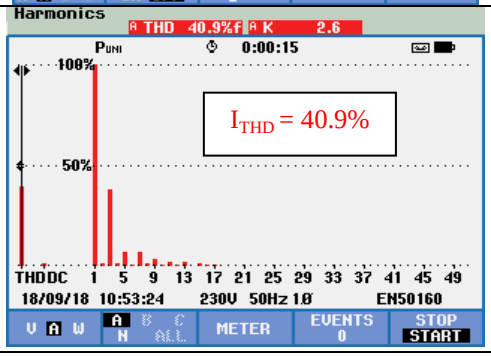	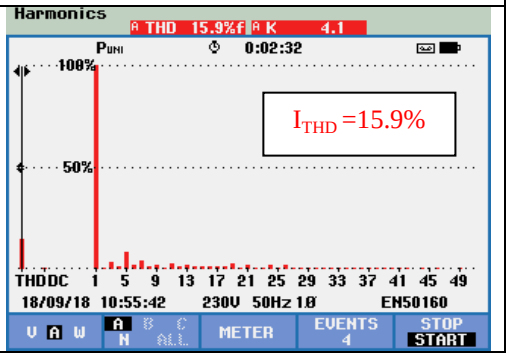

PF	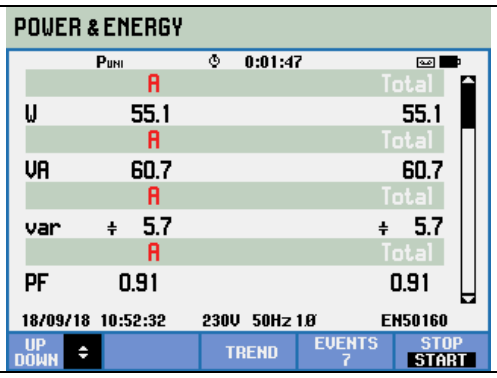	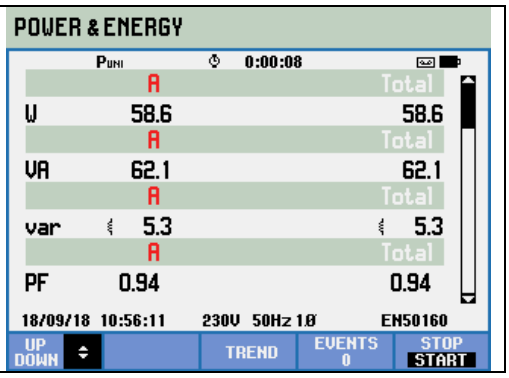

- **OBSERVATION:**

1.From hardware testing result, it is observed that without implementing active zeta PFC to the system, power factor of the system is poor (0.91) and causes the distortion in harmonic current at the input side and hence THD is high (40.9%)
2. To maintain the high power quality it is necessary to improve the power factor and reduce THD. Active PFC driven circuit results improvement in PF upto 0.94 and reduces THD 15.9% by adjusting input current to follow sinusoidal voltage at the source side as shown in the table I, V I waveform (voltage follower approach).

VI. CONCLUSION

In this paper the power factor correction technique using zeta converter for improving the power factor and reducing THD is discussed. The zeta converter is controlled by voltage follower control, which regulates the dc link voltage and draws the current from the supply which is in phase with the voltage and is operated in discontinuous conduction mode. The proposed drive, gives the power factor 0.94, with THD - 15.9%. So the PF is improved with THD is reduced by 23% as compared with conventional drive.

VII. ACKNOWLEDGMENT

I extend my deep sense of indebtedness and gratitude to my **parents**. I am thankful to my project guide **Mr S. V. Shelar,** , for his immense motivation throughout my project and providing me an opportunity to work under his supervision and guidance. His receptiveness to new ideas and his willingness to spare time has always inspired and motivated me. His keen interest, invaluable guidance and immense help were instrumental in the successful completion of this work. I wish to express my heartfelt gratitude to **Mr. S. M. Chaudhari** Head of electrical Engg. Department **Mr. P. P. Mahajan, Mrs.K.S.Gadgil, Mrs. S.S. Landge, Mrs. A. D. Shiralkar** for their constant inspiration and uninterrupted support. I am indebted to the moral support and valuable suggestions provided by them in various stages of this M.E project work. And I am grateful to them for the valuable time they have spared for me during this work..

REFERENCECS

[1] Kanwar Pal and Sanjeev Singh, "Controllers for Power Factor Correction of PMBLDCM Drive", Recent Researches in Applications of Electrical and Computer Engineering, Conference Paper · March 2012

[2] Bhim Singh, Shikha Singh, fellow IEEE member, " Power Factor Corrected Zeta Converter based Improved Power Quality Switched Mode Power Supply", IEEE Transactions on Industrial Electronics, Vol. 62, No. 9, September 2015.

[3] D. Lenine ,Ch.SaiBabu, "A Static Improvement of Predictive Control for Single Phase Voltage Fed Power Factor Correction Converters", International Conference on Advances in Recent Technologies in Communication and Computing, 2010.

[4] Hadi Y. Kanaan and Kamal Al-Haddad, "A Unified Approach for the Analysis of SinglePhase Power Factor Correction Converters ", IEEE, 2011.

[5] TilakGopalarathnam, and Hamid A. Toliyat, Senior Member, IEEE," A New Topology for Unipolar Brushless DC Motor Drive With High Power Factor", IEEE TRANSACTIONS ON POWER ELECTRONICS, VOL. 18, NO. 6, NOVEMBER 2003.

[6] www.onsemi.com ,"Power Factor Correction (PFC) Handbook",HDB875/D Rev 5, Apr-2014.

[7] Milan M. Jovanovic and Yungtaek Jang, "State-of-theArt, Single-Phase, Active Power-Factor-Correction Techniques for High-Power Applications—An Overview "IEEE transactions on industrial electronics, vol. 52, no. 3, June 2005.

[8] Bhim Singh et al. "Comprehensive Study of Single-Phase AC-DC Power Factor Corrected Converters with HighFrequency Isolation." IEEE transactions on industrial informatics, vol. 7, no. 4, November 2011.