EXPERIMENTAL INVESTIGATION ON DI DIESEL ENGINE FUELLED WITH RAPESEED BIODIESEL FITTED WITH SCR TO REDUCE NO_X

[1]Siddu Premavathi and [2]Dr.C. Sreedhar
[1] PG Scholar, [2] Professor, Department of Mechanical Engineering,
Siddharth Institute of Engineering & Technology, Puttur, AP, India-517583.

ABSTRACT: *Energy is one such essential factor that decides economic growth and social development of a country. Fossil fuels are the major energy contributors and are playing an energetic role in the energy scenario.But these fuels are non-renewable and on combustion are polluting the atmosphere by releasing many pollutants. Biodiesel is found to be one promising solution to overcome above problems. Rape seed biodiesel oil is one such biodiesel that can be easily blended with diesel fuel in different ratios of 5%, 10%, 15%, 20% and 25%. Blended fuel is used in CI diesel engine fitted with Selective Catalytic Reduction (SCR). It is a process of injection of NOx reduction agent into the exhaust gas and passing the mixture over a bed of catalyst there by reducing the concentration of NOx from engine exhaust. NOx reduction agents like carbonate, ammonium bi-carbonate, cyanrates are used, however researchers found that ammonia and urea can work as reduction agents. In the present experimentation, urea is used as a reduction agent because it is cheaper, easier to store, handle and also to measure the dosage. It is also a non-toxic and urea solution droplet can also penetrate further into the flue gas when injected. Urea concentrations in the increasing proportions of 10%, 20%, 30% & 40% are injected to analyze its effect on NOx reduction. On comparison it is analyzed that with 30% urea concentration more NOx reduction was achieved. Catalyst used in SCR is Titanium di-oxide because of its activity in reduction of NOx combined with urea. Selective Catalyst Reduction technique is considered to be the most significant method to reduce the NOx effectively from exhaust gases*

Keywords: **NOx, Rapeseed biodiesel, SCR, Titanium di-oxide Catalyst, Urea.**

I-INTRODUCTION

Diesel engines are mostly used in many areas such as Automobiles, Locomotives, Marine engines, Power Generators etc., due to their high torque and thermal efficiency. Even though the diesel engines give more benefits, the pollutant emissions of these engines cause more human discomforts. The major pollutant emissions of the diesel engines are particulate matter, hydro carbon, smoke and the Oxides of Nitrogen (NOx). Out of these pollutant emissions, the Oxides of Nitrogen are considered to be the most dangerous. It effects the human health, plants and environment. Over 90% of the NOx formed from the combustion sources is in the form of NO and eventually it forms NO_2 on reacting with atmospheric oxygen and only for this reason most of the NOx reduction efforts are related to the abatement of NO produced during combustion. NOx is a generic term for the mono Nitrogen Oxides NO and NO_2 (Nitric Oxide and Nitrogen di-oxide). They are produced from the reaction of Nitrogen and Oxygen gases during combustion particularly at high temperatures. In metropolitan cities with heavy vehicular traffic, the amount of Nitrogen Oxides emitted into the ecosystem is pretty significant. NOx gases are formed during the combustion of fuel in the engine cylinder. About 90% of the present energy manufacturing is primarily based on the combustion of fossil fuels and the bio mass. The presence of greater Nitrogen Oxides in atmosphere is the main reason for the formation of photo-chemical smog, acid rains, troposphere ozone formation and stratosphere ozone depletion. The aim of this project work is to find out a feasible promising method to reduce NOx emission from the diesel engine exhaust without affecting the engine performance, without any modifications in the fuel and in the combustion process. SCR is found to be the best suited method for controlling NOx by using titanium di-oxide as a catalyst and urea as a reducing agent.

II-LITERATURE REVIEW

Arand et al (1) conducted experiments at two different temperatures i.e 1355K and 1444K in a heavy duty diesel engine using ammonia as a reduction agent without introducing any catalyst. They stated that, for the same reduction of NOx, the lower temperature of urea injection caused a higher ammonia slip than at the higher temperature of urea injection. It was concluded that the ammonia slip was increasing with increasing value of NSR (NO_X storage reduction).

Epperly et al (2) studied the ammonia slip by injecting urea solution into coal fired boilers of 50 MW and 150MW capacity. They stated that about 50% to 60% NOx reduction was achieved with the ammonia slip of 5ppm while the reduction of NOx was improved to about 65% to 75% with an increasing in ammonia slip of 20ppm. It was concluded that NOx reduction was higher while the ammonia slip was higher.

Held et al (3) studied the NOx reduction using copper exchanged zeolite catalysts on a lean-burn spark-ignition engine as well as diesel engine. They stated that a NOx conversion ratio of approximately 45% was achieved for S.I engine and a 65 % NOx reduction was achieved in the case of diesel engines. It was also stated that copper exchanged zeolite catalyst converted nitrogen oxides over a much wider range of fuel-air ratios than noble metal catalysts. It was concluded that either ammonia or urea can be used as reducing agent.

Walker (4) investigated on a heavy duty diesel engine fuelled with natural gas using ammonia injection for the reduction of NOx emissions from the engine exhaust to develop an exhaust gas treatment system. It was concluded that the NOx was reduced by 80 % and an ammonia slip of less than 2ppm was achieved while the engine performance was reduced slightly.

Nag et al (5) investigated the reduction of NOx and the effects of space velocity variation at peak activation temperature using copper ion exchanged x-zeolite with urea infusion. It was reported that, to minimize the deactivation of zeolite caused by water, ammonium carbonate and ammonium sulphate were deposited on the copper ion-exchanged x-zeolite. It was also reported that a maximum NOx conversion efficiency of 62% in the lean burn range was achieved. It was also concluded that the ammonia slip was more in case of urea infusion than ammonium salt deposition at higher temperatures.

Koebel et al (6) studied the use of urea injection SCR for heavy duty automotive trucks. They stated that the catalytic volume was reduced without affecting the NOx reduction over a wide range of operating temperature. It was concluded that much shorter residence time of the exhaust gas in the catalyst would lead to secondary emission of Ammonia.

Ioannis Gekas et al (7) used a novel urea injection system, based on a mass produced digital pump combined with an electronic control unit specially developed for controlling the urea-SCR process onboard the vehicles. They stated that the NOx conversion achieved was above 80% with ammonia slip below 10 PPM. It was concluded that with this novel 300 cpsi Urea injection systems, the SCR catalysts volume could be reduced to 2/3 compared to the 130 cells per square inch (cpsi) catalyst.

Rusch et al (8) investigated different particulate measuring technologies on the influence of parameters like the sulfur content of the fuel and the reducing agent. They stated that the SCR technology was effective in the reduction of both NOx and particulate emission. It was also reported that, apart from an effective reduction of the organic fraction of the PM, the system was also able to reduce the carbon fraction. It was also concluded that with the use of a SCR system, a clear decrease of the nano particulate emissions was achieved under all dosing conditions.

Tennison et al (9) studied the use of an oxidation catalyst to convert engine exhaust HC and CO upstream of the urea SCR system. They stated that aqueous urea was added to the exhaust using a Ford developed air assisted injection system. It was stated that a base metal / zeolite SCR catalyst was utilized to convert NOx to N_2 under lean conditions. It was also concluded that the NOx level was reduced to the range of ULEV II (ultra low emissions vehicle) levels

Schmieg and Lee (10) investigated the selective catalytic reduction of NO using urea (urea-SCR) as one of the promising technologies for removing NOx from diesel engine exhaust. They stated that the NOx in the engine exhaust was reduced by ammonia (NH_3) derived from urea over a catalyst to N_2. It was further stated that the effect of various reactor operating conditions on the NOx reduction and performance of three different catalyst formulations (Cu-zeolite, Fe-zeolite, Vanadium-based) were studied to obtain useful guidance in the design and operation of urea-SCR lean NOx emission control systems. It was further reported that the effects of NO-NO_2 ratio on the steady-state NOx reduction activity at typical diesel engine exhaust temperatures from 150 to 550°C were also investigated.

Acharya et al (11) studied the impact of nitrogen dioxide (NO_2) on the ammonia consumption, production of nitrous oxide (N_2O) by developing a commercial urea-selective catalytic reduction (SCR) system having twin catalytic reactors used in series. It was stated that the aqueous urea solution was injected into the exhaust by using a twin fluid, air-assisted atomizer. It was also stated that NO_2 was used to oxidize particulate matter (PM). It was concluded that a significant effect of NO_2 on the overall performance and efficiency of the SCR system was achieved. It was also concluded that the urea-SCR catalyst had higher selectivity for NO_2 than NO and in the presence of NO_2; the NH_3 requirement for complete removal of NOx was changed

Lee et al (12) investigated the performance of urea-SCR system using flow visualization techniques in a heavy duty diesel engine to determine the optimal urea injection condition. It was stated that a parametric study was conducted on gas temperatures, space velocity and aspect ratio. It was also stated that the urea injector was located at the opposite direction of exhaust gases emitted into an exhaust duct. It was further told that the optimal quantity of urea and its conversion efficient was estimated at each mode of ND-13 modes.

Murata et al (13) investigated the development of a urea SCR system combined with a diesel particulate filter system to reduce NOx and PM in a four liters turbocharged with intercooler diesel engine. They reported that significant NOx reduction was observed at low exhaust gas temperatures by increasing NH_3 adsorption quantity in the SCR catalyst. It was concluded that they have developed a urea SCR system that could reduce NOx by 75% at the average SCR inlet gas temperature of 158 deg. C by adopting the NH_3 adsorption quantity control

Nishioka et al (14) developed a urea dosing device with two injectors to enhance the NOx reduction at low exhaust temperatures and also to lower the electric power consumption of the SCR system. They stated that the injectors were made to operate with a single phase urea solution, without air assistance. It was stated that one injector was located on the wall of the main exhaust duct for directly supplying urea to the exhaust and the other injector was used to supply urea to a bypass passage connecting the exhaust during low exhaust temperatures. It was also concluded that to overcome the problem of uniform spray distribution, a set of impact plates were used

Blakeman et al (15) investigated the potential of urea based SCR for NOx reduction on a light duty vehicle. It was stated that a diesel oxidation catalyst was also incorporated, to deal with carbon monoxide, hydrocarbons and volatile organic fractions. They reported that the investigations were carried out to study the various effects by placing the oxidation catalyst at different positions in the system by varying the SCR catalyst composition and the rate of urea injections. It was concluded that, in the investigation, a best system was devised to achieve a maximum NOx conversion of 73%.

T V Johnson et al [16] reported that Zeolite SCR catalysts are used for reduction of NOx and converting NOx into N_2 by decomposing urea at temperature less than 200ºC

Manfred Koebel et al [17] reported that NOx emissions can be reduced by using catalyst. Here using three catalyst like urea, ammonia, and cyan uric acid for reduction, by comparing three catalyst urea is high efficient for reducing more NOx emissions.

Hai-Ying Chen et al [18] reported that NOx is converted into N_2, this conversion depends on the catalyst and reducing agent the Catalyst used for conversion are Fe/MFI, Co/MFI, Pd/MFI and reducing agent are ammonia NOx conversion takes place deforming ammonia into N_2 at temperature of 200ºC.

III-SCR TECHNOLOGY

SCR technology is designed to permit nitrogen oxide (NOx) reduction reactions to take place in an oxidizing atmosphere. It is called "selective" because it reduces levels of NOx using urea as a reducing agent within a catalytic system. The reducing agent reacts with NOx to convert the pollutants into nitrogen, water and tiny amounts of carbon dioxide (CO_2). The reducing source is usually automotive-grade urea, otherwise known as Diesel Exhaust Fluid, which can be rapidly hydrolyzed to produce the oxidizing ammonia in the exhaust stream. So SCR is one such technology that can be implemented to achieve more NOx reduction .

IV-ARRANGEMENT OF SCR

The single SCR unit is fitted in the exhaust pipe line with the provision of injecting urea solution as shown in Figure 1. The SCR unit consists of a bed of thin foils coated with catalyst materials. Here SCR with titanium dioxide coated catalyst is used. The bed of these catalyst coated foils is housed in a thick metal chamber having elliptical cross section with two openings that is one inlet and the second is outlet. The exhaust gas from engine enters at inlet and leaves through outlet of the SCR unit. The flow of exhaust gases over these beds of catalysts creates back pressure due to obstruction in the flow. The size of the SCR bed housing is designed in such a way that it should nullify the formation of back pressure.

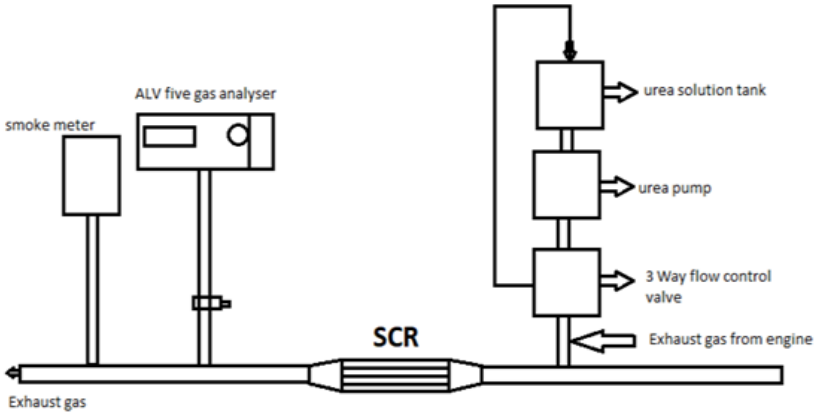

Figure 1: Arrangement of SCR

V-PREPARATION OF AQUEOUS UREA SOLUTION

Many experiments involving the use of chemicals call for their use in solution form by mixing two or more substances together in known proportion. Preparing solutions accurately will improve the safety of the experimental investigation and lead to success.

The concentration of urea solution is defined as the ratio of mass of solute to the mass of solution, Hence, to prepare a 10% aqueous urea solution, 10 grams of urea is dissolved in 90g of water. Similarly different concentrations of urea solution were prepared ranging from 10% to 40% by weight in steps of 10%.

VI-WORKING PROCEDURE OF SCR

In the case of selective catalytic reduction, a catalytic converter converts the nitrogen oxides contained in the exhaust gas into water vapor and nitrogen. For this purpose, a decreasing agent urea is constantly injected into the exhaust gas flow using a metering module.

Initially the engine was started and allowed to run at the rated speed for some period of time for warning up. Before the engine was loaded, the fuel flow rate, the emissions such as HC, CO, CO_2, O_2, NOx and smoke density were recorded. Then the engine was loaded gradually from 0% to 100% of full load in steps of 20%. For each and every load without injection of urea and SCR technique, i.e. under base diesel operation, the fuel flow rate, the other emission parameters such as HC, CO and NOx were recorded. Second set of tests were repeated using the optimum flow rate of urea solution by varying the concentration of urea solution from 10 to 40 % for the maximum reduction of NOx. Finally the tests were conducted with the SCR consisting of titanium dioxide coated catalyst for optimum flow rate and optimum concentration.

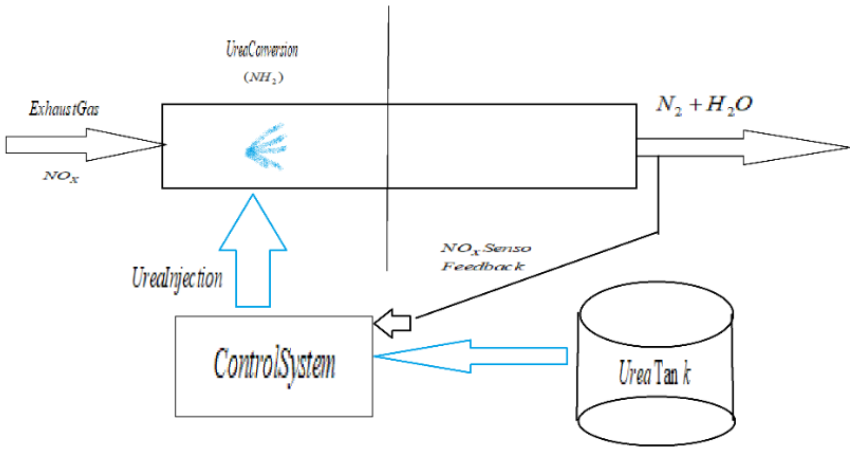

Figure. 2: Working of SCR

The NOx reduction takes place in catalyst chamber. Before coming into the catalyst chamber the ammonia or other reduced agent (such as urea) is injected in such a way that it gets mixed with the gases. The chemical equations for a stoichiometric reaction with the use of either an hydrous or aqueous ammonia for a selective catalytic reduction method is given below:

$$(NH_2)_2CO\ (g) \longrightarrow HNCO + NH_3$$

$$HNCO + H_2O \longrightarrow NH_3 + CO_2$$

$$4NH_3 + 6NO \longrightarrow 5N_2 + 6H_2O$$

VII-RESULT ANALYSIS

The experimental investigations were carried out in a single cylinder four stroke, water cooled kirloskar 5.2 kW diesel engine using SCR technique with urea injection as the post combustion exhaust gas treatment for the reduction of oxides of Nitrogen in the engine exhaust emissions. The results obtained from the experimental investigations are presented below

- Performance characteristics of Rapeseed biodiesel
- Emissions characteristics of Rapeseed biodiesel
- Emissions characteristics of Rapeseed biodiesel with SCR

PERFORMANCE CHARACTERISTICS OF RAPESEED BIODIESEL

Brake Power Vs Brake Thermal Efficiency

In general, the brake thermal efficiency is the ratio of the brake power obtained from the engine to the fuel energy supplied to the engine. The brake thermal efficiency will determine how efficiently the heat is converted into work. The brake thermal efficiency purely depends upon the engine design, type of fuel and engine application.

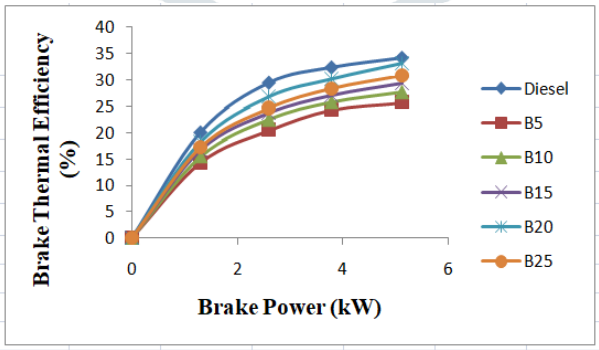

Graph 7.1: Variations of Brake Thermal Efficiency with Brake Power

Graph 7.1 shows the variation of brake thermal efficiency with brake power for different proportions of Rapeseed biodiesel and diesel blends. It is observed from the above graph that the brake thermal efficiency increases with brake power for all Rapeseed biodiesel blends at all loads. Among the different blends, B20 shows better brake thermal efficiency than that of other blends. It is found that the brake thermal efficiency for B20 is 30% and for diesel is 31% at maximum load. Due to higher brake thermal efficiency for diesel the NOx emissions was high compared to other blends due to higher temperature in combustion chamber. The reason for reduction of brake thermal efficiency for biodiesel is due to its lower heating value, low air fuel mixing, its higher viscosity and higher density when compared to that of diesel.

Brake Power Vs Brake Specific Fuel Consumption

Brake Specific Fuel Consumption is the measurement of efficiency of fuel by the engine that combust fuel air mixture and produces rotational motion of the crankshaft. This is used for comparing the efficiency of engine. Brake Specific Fuel Consumption is the ratio of rate of fuel consumption and effective power produced from the engine.

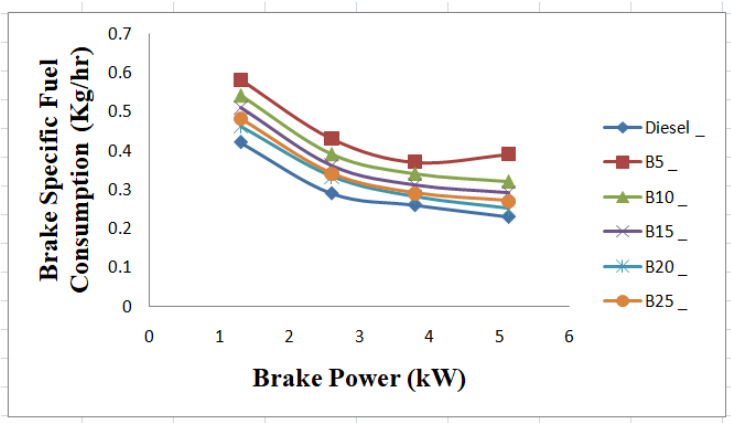

Graph 7.2: Variations of BSFC with brake power

Graph 7.2 shows the variation of Brake Specific Fuel Consumption with brake power for different proportions of rapeseed biodiesel and diesel blends. It is observed that the Brake Specific Fuel Consumption decreases with increasing brake Power for all rapeseed biodiesel blends at all loads. Among all the blends, B20 has lower Brake Specific Fuel Consumption. The Brake Specific Fuel Consumption for B20 is 0.2808 kg/kW-hr and for diesel it is 0.2778 kg/kW-hr at maximum load. The BSFC for biodiesel is higher than that of diesel fuel because of its higher density, viscosity and lower heating value. The biodiesel is fed into the engine on volumetric basis for every cycle of operation. To get the equal output fuel supply is increased and thereby increasing fuel consumption. Brake Specific Fuel Consumption of diesel engine varies when there is change in the injection pressure and combustion timing so it is taken care to maintain constant parameters for combustion of all blends of rapeseed biodiesel. On comparing the different rapeseed biodiesel blends, B20 blend has lesser Brake Specific Fuel Consumption.

EMISSIONS CHARACTERISTICS OF RAPESEED BIODIESEL

Brake Power Vs HC Emissions

The HC emission in the exhaust is due to partially burned or unburned fuel inside in the combustion chamber. .

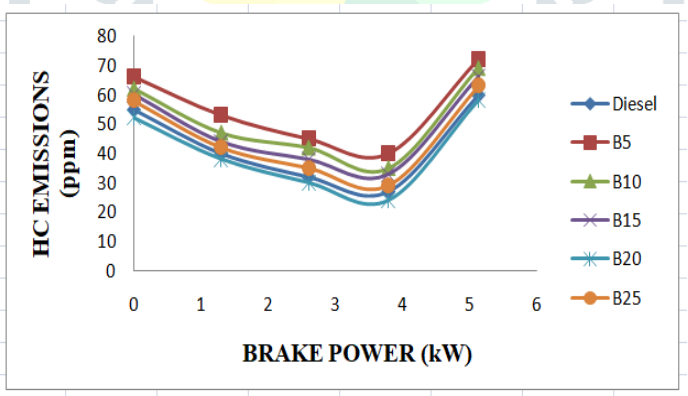

Graph 7.3: Variations of HC with Brake Power

Graph 7.3 shows the variation of HC emission with brake power for different proportions of rapeseed biodiesel and diesel blends. It is observed that the HC initially decreases with brake power for all blends but at higher load the HC emissions are more. Among all the blends, B20 has lower HC emissions. The HC emission for B20 is decreased by 27% compare to diesel at maximum load. The HC emission is slightly higher in diesel fuel because of incomplete combustion due to deficient oxygen compared to oxygen rich biodiesel and this leads to increase in HC emission. The B20 blend has lower HC emission than that of diesel because of rapeseed biodiesel contains higher oxygen concentration and enhances combustion which in turn decreases the HC emission. Even though oxygen concentration is higher, for the other biodiesel blends HC emission is higher due to low calorific value and high viscosity with increasing the blend ratio.

Brake Power Vs CO Emissions

CO emission depends on the combustion of fuel air mixture and presence of carbon content in the fuel. During the combustion, the carbon present in the fuel gets oxidized with the oxygen present in air and finally forms CO and CO_2 depending on the condition. The carbon present in the fuel which does not get converted into CO_2 becomes CO in the exhaust.

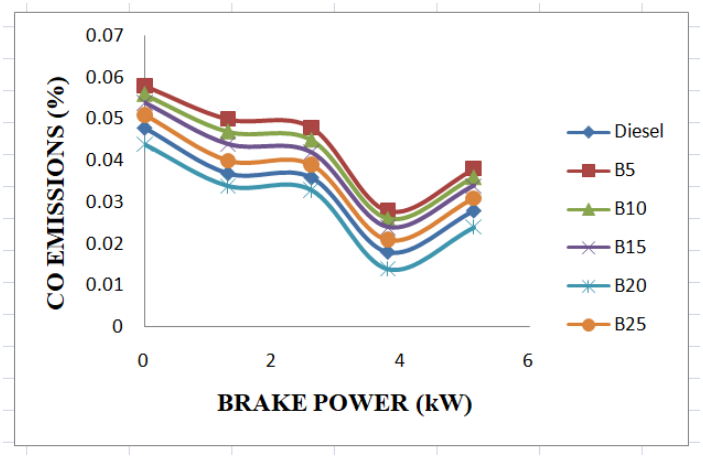

Graph 7.4: Variations of CO with Brake power

Graph 7.4 shows the variation of CO with brake power for different rapeseed biodiesel and diesel blends. It is seen that the CO emissions are decreased with increasing brake power for all blends at all loads. Among the blends B20 has lower CO emission. The CO for B20 is 0.024 % and for diesel it is 0.028% at maximum load. The CO emissions for B20 is lower compared to diesel this is due to higher oxygen content in the biodiesel blends that enhances the complete combustion and leads to reduction in the CO emission. The CO emission increases with increase in biodiesel proportion (i.e. above B20 blend) due to high viscosity, which leads to poor atomization, less homogenous mixture and uneven distribution of fuel in the combustion chamber.

Brake Power Vs NOx Emissions

NOx emissions are found in an diesel engine due to higher in-cylinder temperature. Though the diesel fuel based biodiesel does not contain nitrogen, the oxides of nitrogen are formed by taking the nitrogen from the air, since 78% of nitrogen is present in the air.

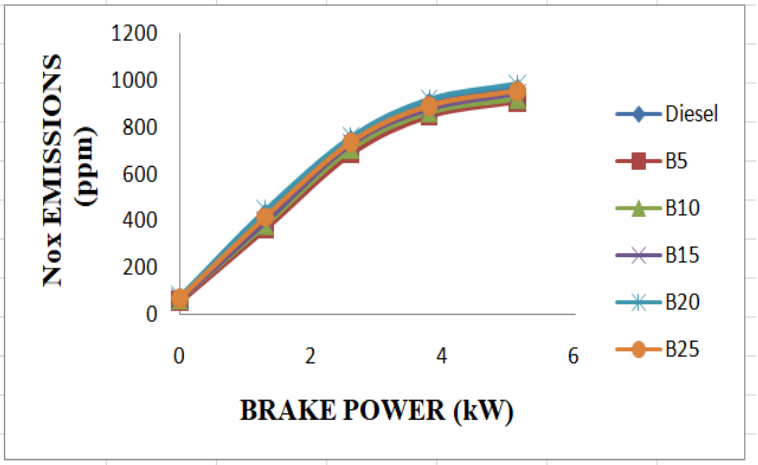

Graph 7.5: Variations of NO_x with brake power

Graph 7.5 shows the variation of oxides of nitrogen emissions with brake power for varying rapeseed biodiesel and diesel blends. It is noted that the NOx increases with increasing brake power for all rapeseed biodiesel blends at all loads. Among the different rapeseed bio-diesel blends, B20 has lowered NOx emission than that of other blends. The NOx for B20 is 970 ppm and for diesel is 995 ppm at maximum load. The diesel fuel has higher NOx emission because of its higher brake power. This results in the higher temperature inside the combustion chamber due to the higher calorific value of diesel fuel compared to blends of biodiesel.

EMISSIONS CHARACTERISTICS OF RAPESEED BIODIESEL BY USING SCR

Brake Power Vs HC Emissions

B20 has lower HC emissions than that of other blends and diesel because rapeseed biodiesel contains higher oxygen concentration and enhances combustion which in turn decreases the HC emission.

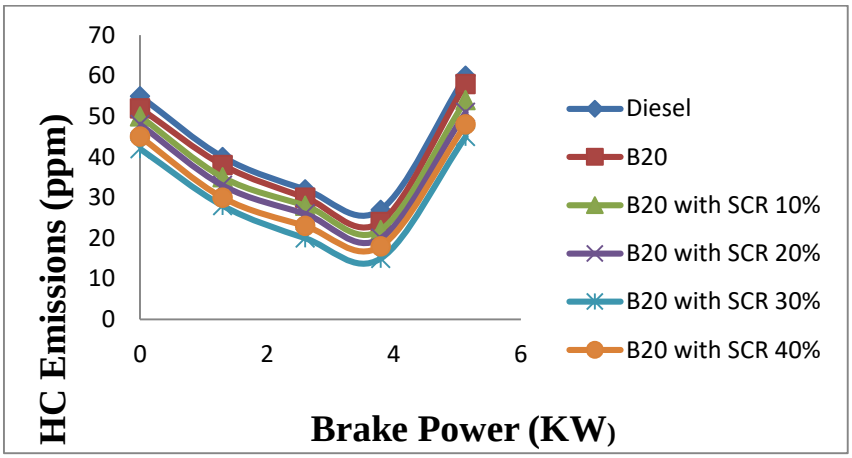

Graph 7.6: Variations of HC with brake power

Graph 7.6 shows the variation of HC emission with brake power of B20 rapeseed biodiesel blend with the injection of urea solution of different concentrations (10% 20% 30% and 40%) in the tailpipe. It is observed that the HC emissions are decreasing for rapeseed biodiesel blends with increase in concentration of urea solution when compared to diesel fuel operation. 30% of urea solution concentration proves to be the best concentration. Urea will help in reduction of HC emission because of chemical reaction between HC and urea which result in formation of ammonia. But increasing the concentration of urea solution to 40% increases the HC emissions due to changes in chemical reaction compared to 30% concentration of urea solution.

Brake Power Vs CO Emissions

For diesel and B20 rapeseed biodiesel blend, variation of CO emissions with brake power are shown in the Graph 7.7 below. A constant flow rate of 0.75 L/h of urea solution in the exhaust pipe is maintained but of varying concentrations. It is observed that for all concentrations of urea solution, the emission of CO reduces up to certain loads while there is a significant increase in CO emission at full load due to the oxidation at higher exhaust gas temperature.

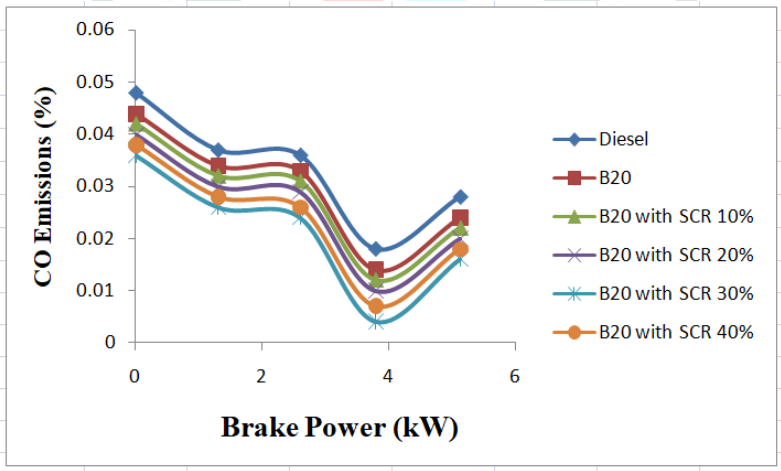

Graph 7.7: Variations of CO with brake power

The maximum reduction of CO was recorded at 30% concentration of urea solution and beyond that a slight increasing of CO was observed at full load condition. At 30% concentration the CO is converted into CO_2 due to presence of oxygen in the urea solution.

Brake Power Vs NO_X Emissions

Urea solution of varying concentrations at a constant flow rate of 0.75 L/h is injected into exhaust pipe for a diesel engine running with B20 rapeseed biodiesel fuel. Graph 7.8 shows the curves representing the oxides of nitrogen with brake power for varying concentrations of urea solution and diesel fuel. It is noted that NO_X increases gradually as the load increases for the B20 rapeseed biodiesel blend and also for diesel. It is noted that NOx emissions for 30% concentration of urea solution is less compared to all other experimented fuels.

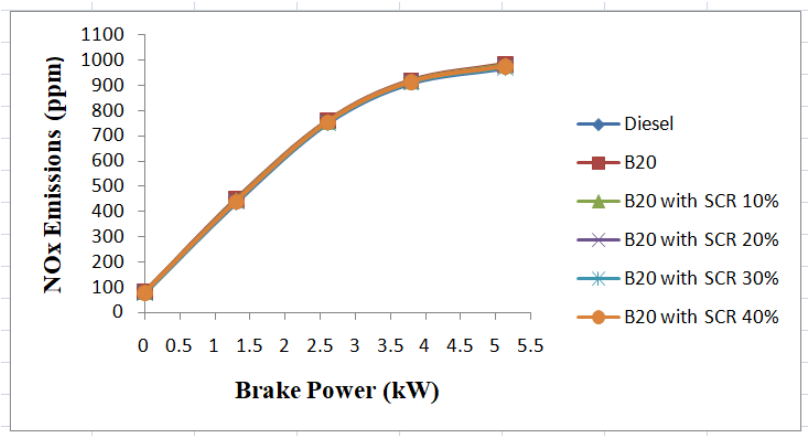

Graph 7.8: Variations of NO_X with brake power

However a slight increase in NOx is observed at 40% concentration urea solution. This is due to the choking of highly concentrated urea solution in the needle injector leading ot uneven flow and their by increases NOx . Among all the concentrations 30% urea solution is the optimum concentration for reducing the NO_X, The NOx fosel enginer B20 rapeseed biodiesel blend with out injecting urea solution in tail pipe of an die is 985 ppm and for 30% concntration of urea solution it is 972 ppm at maximum loads.

VIII-CONCLUSION

In brief, this experimental investigation was aimed on the NOx reduction by using SCR with urea injection as after treatment of exhaust gas system. On analysis of the results of this work it is observed that there is an efficient reduction of NOx emission from tail pipe with urea injection in the exhaust gases using SCR technology. Finally it can be concluded that the NOx can be effectively reduced from diesel engine fuelled with rapeseed biodiesel by using SCR technique with titanium dioxide catalyst along with the injection of urea solution.

IX-REFERENCES

1. Arand, " Urea reduction of NOx in Fuel Rich Combustion effluents," United States, paper (1982), 4,325,924
2. Epperly, W.R., Broderick, R.G.,"Control of nitrogen oxides emission from stationary sources" Proceeding of the 50th Annual Meeting of the American Power Conference, IL, USA, (1988), pp. 911-915.
3. Held, W., König, A., Richter, T., and Puppe, L"Catalytic NOx Reduction in Net Oxidizing Exhaust Gas," SAE Technical Paper 900496, ., (1990), pp.209-215.
4. Walker, J. and Speronello, B., "Development of an Ammonia/SCR NOx Reduction System For A Heavy Duty Natural Gas Engine," SAE Technical Paper 921673.
5. Nag, P., Ghosh, B., Das, R., and DuttaGupta, M. "NOx Reduction in SI Engine Exhaust Using Selective Catalytic Reduction Technique," SAE Technical Paper 980935, (1998).
6. Koebel, M., Elsener, M. and Kleemann, M. "Urea SCR: a promising technique to reduce NOx emissions from automotive diesel engines," Vol. 59, (2000), pp. 335-345.
7. Gekas, I., Gabrielsson, P., Johansen, K., Nyengaard, L. et al., "Urea-SCR Catalyst System Selection for Fuel and PM Optimized Engines and a Demonstration of a Novel Urea Injection system," SAE Technical Paper 2002-01-0289, (2002).
8. Rusch, K., Hofmann, L., Zuerbig, J., and Scarnegie, B. "PMReduction by SCR-Catalyst," SAE Technical Paper 2003-01-0777, (2003).
9. Tennison, P., Lambert, C., and Leven, M."NOx Control Development with Urea SCR on a Diesel Passenger Car," SAE Technical Paper 2004-01-1291,(2004)
10. Schmieg, S. and Lee, J., "Evaluation of Supplier Catalyst Formulations for the Selective Catalytic Reduction of NOx With Ammonia," (2005) SAE Technical Paper 2005-01-3881.
11. Acharya, R., Alam, M., and Boehman, A."Fuel and System Interaction Effects on Urea-SCR Control of NOx in Diesel Exhaust Aftertreatment," SAE Technical Paper 2006-01-0638. (2006),
12. Lee, J., Baik, D., and Lee, S. "Evaluation of SCR System in Heavy-Duty Diesel Engine," SAE Technical Paper 2008-01-1320. (2008)
13. Murata, Y., Tokui, S., Watanabe, S., Daisho, Y. et al. "Improvement of NOx Reduction Rate of Urea-SCR System by NH3 Adsorption Quantity Control," SAE Technical Paper 2008-01-2498. (2008)
14. Nishioka, A., Sukegawa, Y., Katogi, K., Mamada, H. et al."A Study of a New Aftertreatment System (2): Control of Urea Solution Spray for Urea-SCR," SAE Technical Paper 2006-01-0644. (2006)
15. Blakeman, P., Chandler, G., John, G., and Wilkins, A. "Investigations into NOx Aftertreatment with Urea SCR for LightDuty Diesel Vehicles," SAE Technical Paper 2001-01-3624, (2001).
16. Tv Johnson, Review of diesel emissions and control 12-6-2009
17. Manfred koebel ,Martin ElsenerThomosmarti,NOx reduction in diesel exhaust gas with urea and selective catalytic reduction 24-10-2007
18. Hai-Ying Chen, Qi Sun, Binwel, YoungHoonXeom, Eric Weitz, Wolfgang M.H.Sachtler, Reduction over zeolite-based catalyst at nitrogen oxides in emissions containing excess oxygen unraveling the reaction mechanism Elsevier journal 96 (2004) 1-10