ANALYSIS OF TOUCH DOWN POINT AND RENEWABLE ENERGY GENERATION IN AVIATION

[1] A. Annai Theresa, [2] C. Anish, [3] Priyan Francis, [4] V. Soundara Pandiyan, [5] N. Vasu Devan

[1] Assistant Professor, [2,3,4,5] UG Students,
[1] Department of Electrical and Electronics Engineering,
[1] St. Anne's College of Engineering and Technology, Cuddalore, India.

Abstract: The increase in demand for power unlocked the gates of many alternative energy resources like solar, wind and tidal. But these sources are seasonal and uncertain. This uncertainty made the private organizations to generate their own electric power. In this concept, here comes the airport management that has overcome the uncertainty to produce power by developing its own power generation in runway by using the great air velocity of the aircraft during landing and take- off. The low power wind turbine (LPWT) is installed on both sides of runway to acquire power during aircraft landing and takeoff. The second concept is the touchdown point which is automated in this paper. Touchdown aviation is essential to reduce accidents during end state of flying called landing. An innovative concept of employing piezo electric crystals arranged in matrix format on the runway touchdown zones (approximately 100meters). Piezo crystal accepts the impact energy of an aircraft while touching runway and generates voltage, accepts frictional energy while movement of an aircraft.

***Index Terms* - LPWT, Piezo crystal, touchdown point, landing, take- off.**

I. INTRODUCTION

The increase in demand for power has become more in day to day life. Rising in demand for electricity made the advancement in finding the alternative generation of power resources for the future generations. Energy harvesting system has become more essential for all the developing countries. There are many alternative energy resources like solar, wind and tidal which has become seasonal and during the uncertainties it is much more difficult to generate power with all enhanced power quality. This made the radical shift for the private organization to generate their own electric power as their business goals as a result of deregulation, open access, and privatization, is causing a significant review of network design and operating practices. The resultant separation of production, supply, bulk transmission, delivery (distribution), and metering into different businesses has sharpened the focus of these organizations.

Energy Demand Management (EDM) which is also known as Demand Side Management (DSM) is an alternative modification made in generating the energy resources during the peak hours. A newer application for DSM can be done in the airport runway system in balancing the intermittent generation from other renewable energy resources when there is a seasonal issue. EDM activities attempt to bring the electricity demand and supply closer to the operational needs for a particular organization and also for the consumers nearby the society.

Runway excursions at landing is considered as a major threat to aviation safety as they account for approximately 25% of all incidents and accidents in air transport, and 96% of all runway accidents. The main issue in the Landing is regarding the touchdown process which is done manually these days. The information should be obtained at fastest rate by the Air Traffic Control (ATC) room and must be communicated to the aircraft to control its actuators to reduce speed in accordance with the local wind speed, direction and pressure. Monitoring the movement of an aircraft after touchdown is essential to locate its physical position on the runway before calling another aircraft for landing. There were a total of 415 accidents worldwide during the period of 2010-2014. Of these accidents, 90 were classified as runway/taxiway excursions It should be noted that 409 (99 percent) of all accidents could be assigned an accident category or End State. It is essential to find out touchdown point of an aircraft to avoid accidents and to reduce communication delay during landing (End state of flying).

II. EXISTING SYSTEM

The existing system of the touchdown point and its description is explained in this session.

2.1Touchdown point

The existing system uses a normal power supply for the runway power management and more energy is required to make the lighting system effective during night times. The communication with the C- band is at higher rates but the touchdown point is done manually through Aero MACS. There are more difficulties in analyzing the speed of the aircraft between the runways from the point of touchdown. There are chances of angle deviation from touchdown point which leads to overshooting of runways. Improper monitoring of the taxi-ways could lead to accidents and collision of aircraft.

2.2Aero MACS Communication

Aero MACS is based on a specific commercial profile of the Institute of Electrical and Electronics Engineers (IEEE) 802.16standard known as Wireless Worldwide Interoperability for Microwave Access or WiMAX. To help increase the capacity and efficiency of the nation's airports, a secure wide band wireless communications system is proposed for use on the airport surface.

As the communications, navigation, and surveillance (CNS) facilities for air traffic management (ATM) at an airport grow in number and complexity, the need for communications network connectivity and data capacity increases. Over time, CNS infrastructure ages and requires more extensive and expensive monitoring, maintenance, repair or replacement. Airport construction and unexpected equipment outages also require temporary communications alternatives.

2.3 Runway Power Generation

Runway power generation is done with the normal distribution generation supply from the substation, feeders and transmission lines. Airport runway airstrips need more energy during the night time lighting for the aircraft landing and takeoff. When more power is consumed then there will be energy demand and crisis for the commercial and residential purposes. There are so many alternative methods for generation of power but those have become seasonal with the weather conditions. More advancement must be made to have an alternative sources of energy.

2.4 Description of the Existing system

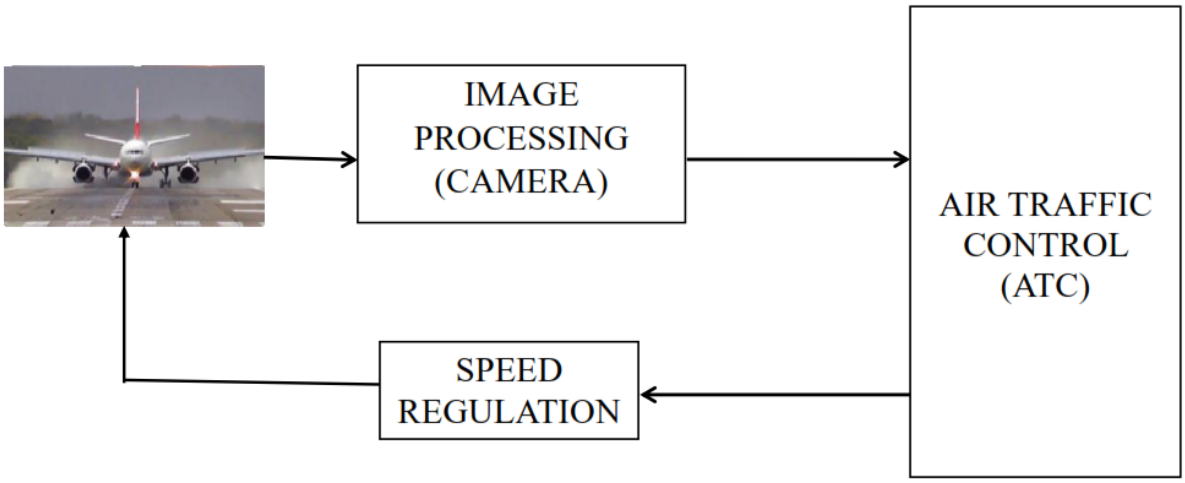

Fig.1 Block diagram of the existing system

In existing system as shown in figure1, the image processing is used to determine the touchdown point. The normal power supply is used for runway and other lighting system. The image of the aircraft after landing is processed by the ATC and the information is passed to the pilot to control the speed of aircraft. The disadvantages are delay in information receiving from the ATC to pilot and there is no power generation from the aircraft landing

2.5 Drawbacks of the Existing system

There are more difficulties in analyzing the speed of the aircraft between the runways from the point of touchdown. The communication with the C- band is at higher rates but the touchdown point is done manually through AeroMACS. There will be a delay in communication between the ATC and pilot. The supply will be separately given for runway and other lighting system.

III. PROPOSED SYSTEM

In this session the proposed touchdown point and the renewable energy generation is analyzed and the advantages of the proposed system also is given. The block diagram of the proposed system is shown in figure 2.

3.1 Touchdown aviation and efficient renewable energy generation

The LPWT can be installed on both sides of runway to acquire power during aircraft landing and takeoff. Generally on runway, aircrafts movement will be around 400 nautical miles per hour. During the movement very great air velocity will occur on the runway and the same will be enough to drive small micro wind turbines to produce power. This power generated for the runway can also be used in the taxi-way and other purposes.

The second concept is the touchdown point, which is the first point for the aircraft to touch the runway during landing. In the existing system the touchdown point is analyzed manually and communication between the pilot and monitoring room is very difficult to achieve on the runway which leads to angle deviation from the point. Improper monitoring of the touchdown point can lead to collision of aircraft on the runway. Existing communication system Aeronautical Mobile Airport communication System (Aero MACS) are done with the high rate and safety enhancing communication system in C- Band without getting accurate touchdown points. The proposed communication system that have covered all the future needs of Air Traffic Control (ATC) and Air Traffic Management (ATM) are controlled using the Embedded Micro Controller (EMC) and automated for achieving the exact point of touch down.

The power generation can also be done with the touchdown point. If the accurate point of the touchdown zone is analyzed then with the help of vibrations created during the landing and takeoff the power can be generated which is a unique step for energy conservation system. This type of power generation is done by using the piezoelectric material which uses a piezoelectric crystal to

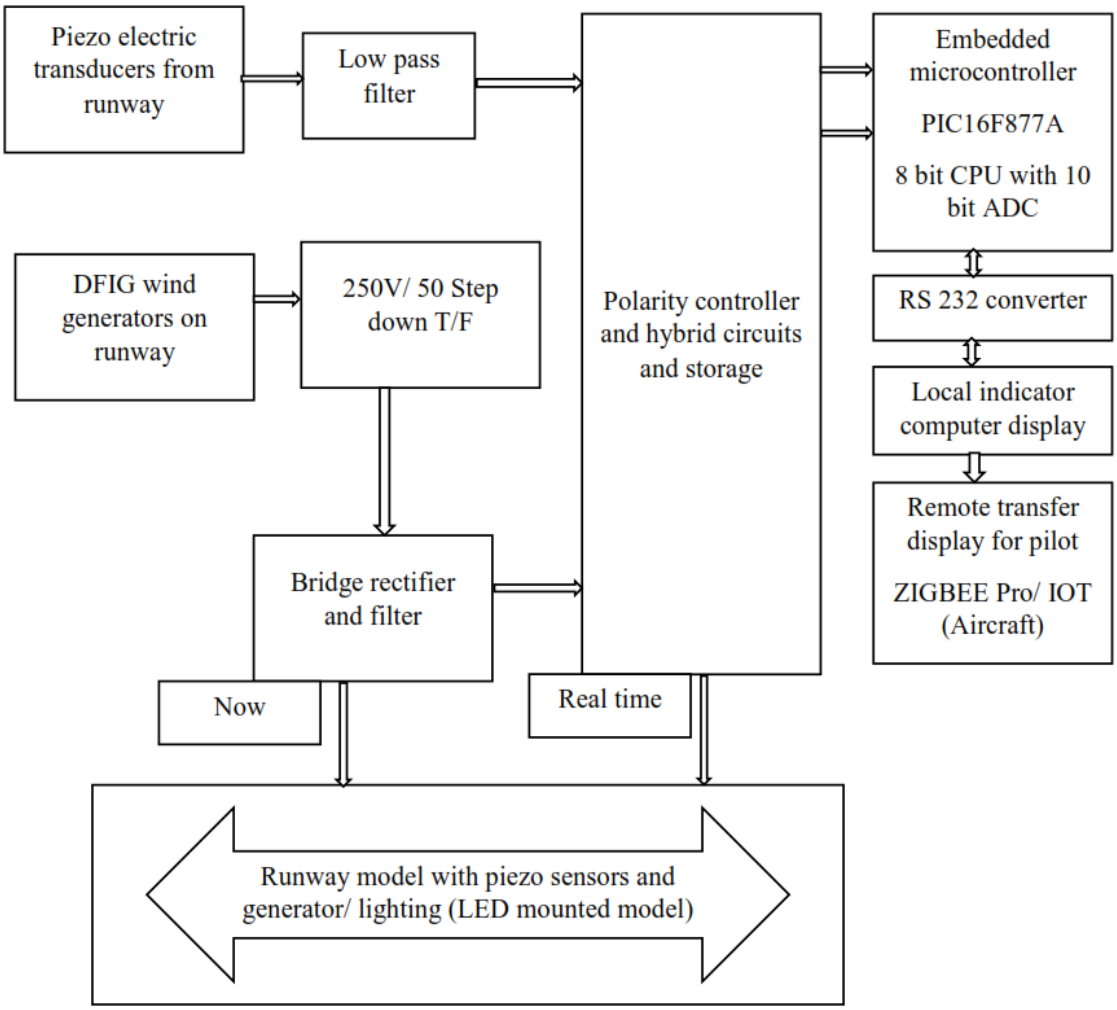

Fig.2 Block diagram of the proposed system

produce voltage for the runway and taxi-way. Large amount of pressure is exerted on the runways during takeoff and landings. If the piezoelectric clusters are placed here then this mechanical energy can be converted to electrical energy.

The efficiency of system can be improved by placing the stacked structures which contains several layers of piezoelectric clusters and have the capacity to handle very huge amount of pressure. The maximum takeoff weight for the airbus aircraft (A380) is 560 tones, which can produce 224 KV, so if one considers the total number of landings in the runway a large amount of energy could be produced. Nearly 8138 kWh energy could be produced which can power up to 12207-16276 homes.

3.2 Advantages of Proposed System

- The communication between the ATC(Air Traffic Control) and the pilot
- Because of the microcontroller used, the communication will be very fast
- The power will be generated by the wind turbines and is used for the lighting system of the airport
- No need to determine the touchdown point manually

IV. HARDWARE AND SOFTWARE DESCRIPTION

The hardware and software requirements are given below. The hardware diagram also is given in figure 3.

4.1 Hardware Requirements

Touchdown sensors- Piezo-Electric material
Transformer- Step down Transformer (230v-12v)
Wind Turbine (230V/AC)
Ultra-Capacitor (5.5V, 1F)
Signal conditioners-Amplifier Circuits (0v to 1000mv amplified to 5volts)
Transceiver- ZigBee Transceiver
Microcontroller- PIC 16F877A
RAM- 1 GB or Above
Hard Disk- 40 GB or Above
Monitor- LCD screen with High Resolution

4.2 Hardware Diagram and description

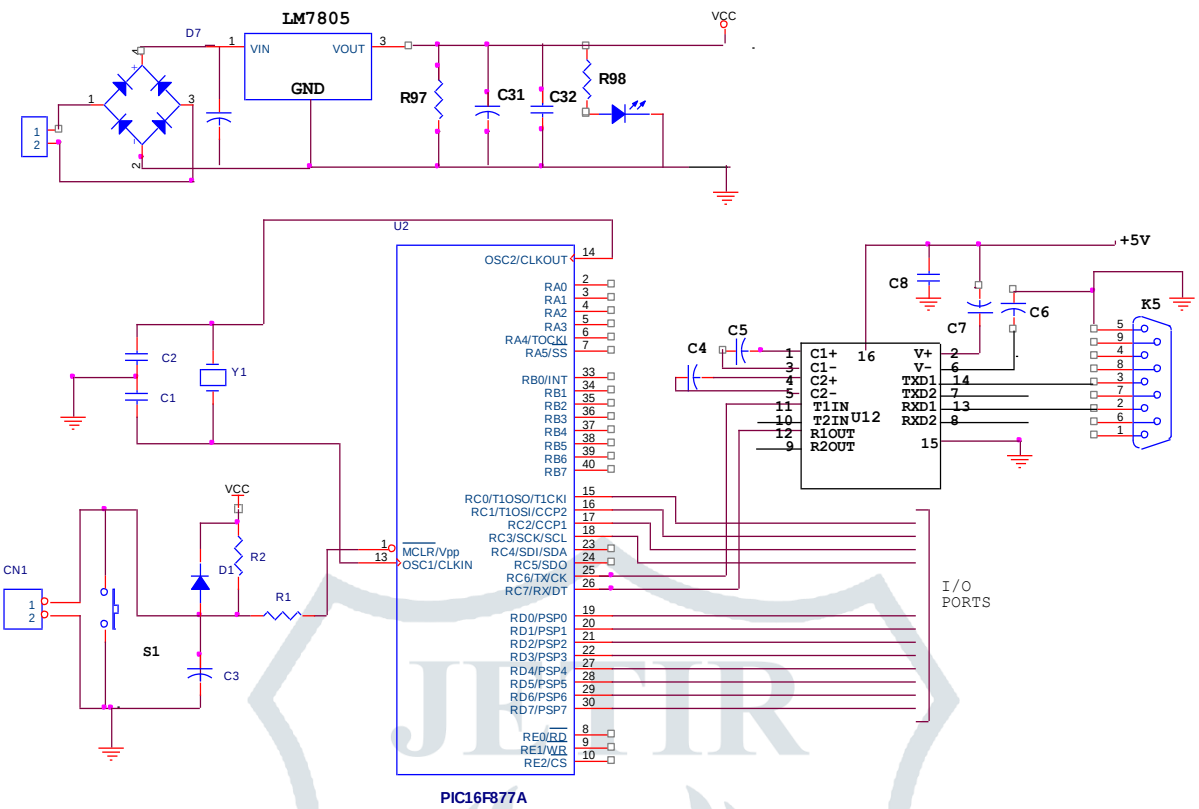

Fig. 3 Hardware diagram

When the airplane landed on the runway, the piezoelectric pads experiences the vibration because of landing with huge pressure. The pads output is given to the signal conditioning to strengthen the signal from the sensor. By the use of sensor, the touchdown point is determined automatically. The microcontroller gets input from the piezoelectric sensor. Due to the air pressure at outside when the aircraft is moving on the runway, the atmospheric air follows the aircraft, this is used to generate the power from wind turbines.

The low power wind turbine is installed on the both sides of the runway. It is also used to identify the location of the aircraft. This is further used for the airport lighting system at night time. The process is monitored by the Air Traffic Control and the communication between the AeroMACS and pilot will be very fast and accurate. The generating voltage rate is displayed in the PC.

4.3 Software Requirements

Front End: Visual Basic 6.0 version
Back End: Embedded C Keil Software

V. RESULT

The prototype model of the proposed design is presented in figure 4, the proposed model consists of all necessary hardware elements for real time demonstration.

5.1 Touchdown point in safe zone

When the aircraft is landed, the touchdown point is determined and the electrical representation of generated values is noted. If the touch point is in safe zone then it is indicated by GREEN DOTS on the runway. It is shown in figure 5.

5.2 Touchdown point in Accident zone

When the aircraft is landed, the touchdown point is determined and the electrical representation of generated values is noted. If the touch point is in accident zone then it is indicated by RED DOTS on the runway. It is shown in figure 6.

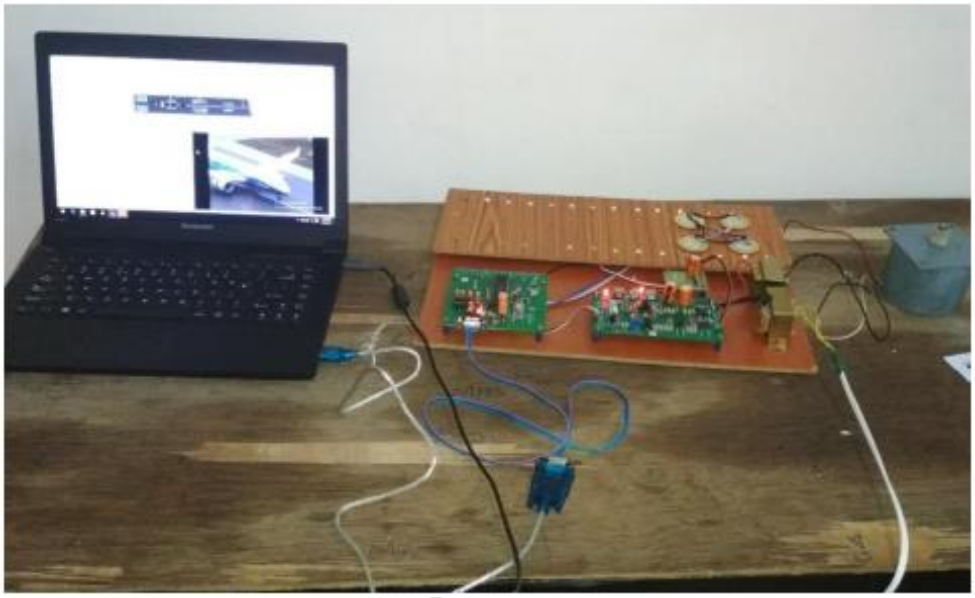

Fig. 4 prototype model of the proposed design

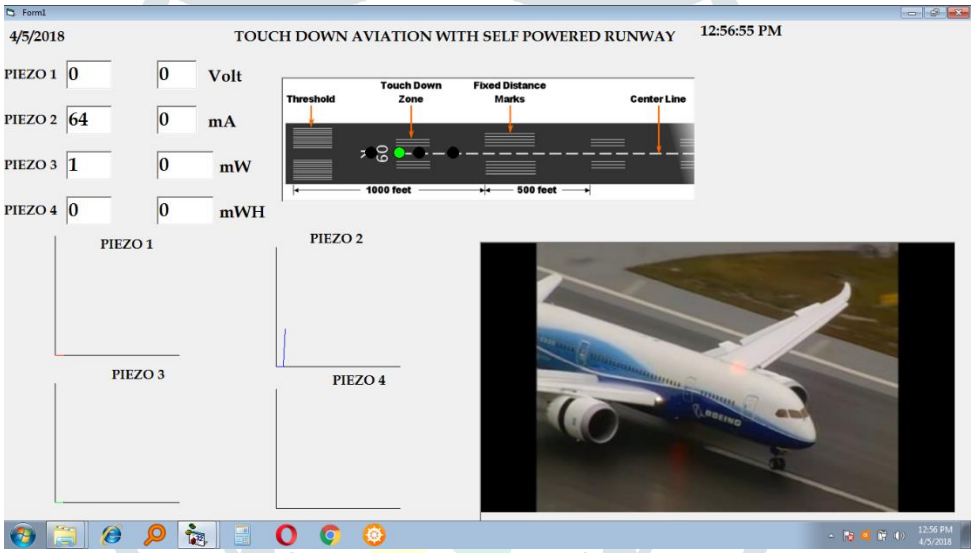

Fig. 5 Touchdown point in safe zone

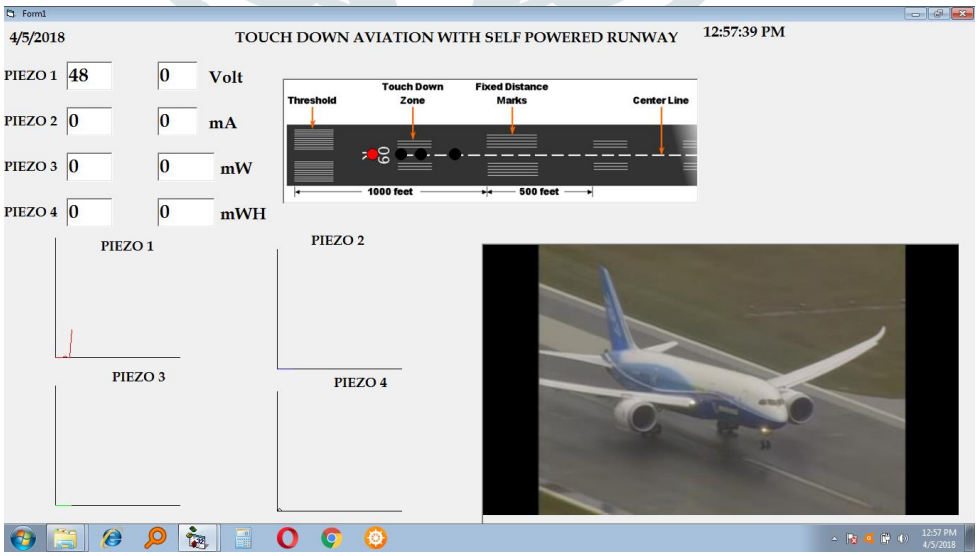

Fig. 6 Touchdown point in Accident zone

VI. CONCLUSION

This idea can be implemented in metro airports to accomplish green and clean energy harvesting system with the self-powered runway with the automated touchdown zone. It uses touchdown sensors to automate the aircraft landing and power is generated with the pressure and impact from the vibration during landing. This is the efficient way of using the alternative source of power generation and it can be made with centralized distribution to all the other commercial and residential purpose from the power generated in airport. This project will surely be a complete resolution for the existing system with the improved efficiency and automation for the social and safety welfare of the country.

6.1 Scope of the proposed design

The proposed system can be implemented on real time environment to save human life, materials, time and accidents with affordably low cost. This can be implemented in any airports in the world.

REFERENCES

[1] "Touchdown: The development of propulsion controlled Aircraft at NASA Dryden," Monographs in Aerospace History, Feb 1999.

[2] "Risk Analysis of Runway overruns Excursions at Landing: Case Study," Department of Statistics and Operations Research, Rey Juan Carlos University, 2011.

[3] "NTSC (National Transport Safety Committee) – Aircraft Accident Investigation Report," Enhancement of Aviation Safety, June 2013.

[4] "A Unique Step Towards Generation of Electricity via New methodology, "International Journal of Advanced Research in Computer and Communication Engineering, Vol. 3, Issue 10, October 2014.

[5] "AeroMACS Evolution- Analysis during Landing, Takeoff and Approach Phases," IEEE Transaction on Aerospace and electronic systems Vol. 50.No.3, July 2014.

[6] C. C. Enger and J. H. Kennedy, "Piezoelectric power sources utilizing the mechanical energy of the human heart," presented at the 16th Annual Conf. Engineering in Medicine and Biology, Baltimore, MD, Nov. 1963.

[7] "An improved bioelectric generator," Trans. Am. Soc. Artif. Intern. Organs, vol. 10, pp. 373–377, Oct. 1964.

[8] W. H. Ko, "Piezoelectric energy converter for electronic implants," presented at the 19th Annual Conf. Engineering in Medicine and Biology, San Francisco, CA, Nov. 1966.

[9] Zavadil, Robert. Nicholas Miller, Abraham Ellis, and Eduard Muljadi."Making Connections." IEEE Power and Energy magazine, Vol. 3, Number 6, Nov./Dec. 2005.

[10] Piwko, Richard. Dale Osborn, Rob Gramlich, Gary Jordan, David Hawkins, and Kevin Porter."Wind Energy Delivery Issues." IEEE Power and Energy magazine, Vol. 3, Number 6, Nov./Dec. 2005.

[11]American Wind Energy Association. "State-Level Renewable Energy Portfolio Standards (RPS)" http://www.awea.org/legislative/pdf/RPS_Fact_Sheet.pdf

[12] R. J. Bessa, V. Miranda, A. Botterud, Z. Zhou, and J. Wang, "Time adaptive quantile-copula for wind power probabilistic forecasting," Renewable Energy, vol. 40, no. 1, pp. 29–39, 2012.

[13] C. Wan, Z. Xu, P. Pinson, Z. Y. Dong, and K. P. Wong, "Optimal prediction intervals of wind power generation," IEEE Transactions on Power Systems, vol. 29, no. 3, pp. 1166–1174, May 2014.

[14]C. Wan, J. Lin, J. Wang, Y. Song, and Z. Y. Dong, "Direct quantile regression for nonparametric probabilistic forecasting of wind power generation," IEEE Transactions on Power Systems, vol. PP, no. 99, pp. 1–1, 2017.

[15] K. A. Singh, R. Kumar, and R. J. Weber, "A broadband bistable piezoelectric energy harvester with nonlinear high-power extraction," IEEE Trans. Power Electron., vol. 30, no. 12, pp. 6763–6774, Dec. 2015.

[16] H. D. Akaydın, N. Elvin, and Y. Andreopoulos, "Wake of a cylinder: A paradigm for energy harvesting with piezoelectric materials," Exp. Fluids, vol. 49, no. 1, pp. 291–304, Jul. 2010.

[17] S. Pobering, S. Ebermeyer, and N. Schwesinger, "Generation of electrical energy using short piezoelectric cantilevers in flowing media," Proc. SPIE, vol. 7288, pp. 728807-1–728807-8, 2009.

[18] I. Staffell and S. Pfenninger, "Using bias-corrected reanalysis to simulate current and future wind power output," Energy, vol. 114, pp. 1224–1239, 2016.

[19] A. M. L. Da Silva, R. A. Fern´andez, and C. Singh, "Generating capacity reliability evaluation based on montecarlo simulation and cross-entropy methods," Power Systems, IEEE Transactions on, vol. 25, no. 1, pp. 129–137, 2010

[20] K. Xie and R. Billinton, "Considering wind speed correlation of wecs in reliability evaluation using the time-shifting technique," Electric Power Systems Research, vol. 79, no. 4, pp. 687–693, 2009.