HYBRID RAILWAY POWER CONDITIONER FOR TRACTION POWER SUPPLY SYSTEM

[1]Mrs.M.Suguna, [2]Mr.P.Velmurugan

[1]Assistant Professor, [2]Assistant Professor
[1]Electrical & Electronics Engineering,
[1]Narasu's Sarathy Institute of Technology, Salem, India.

Abstract: Co-phase traction power system has high potential to be power supply for high-speed railway. However, the dc operation voltage of conventional power quality compensation device within, such as railway power quality conditioner, is high and may limit its application and development. The Hybrid Power Quality Conditioner (HPQC), in which a capacitive coupled LC structure is added, is thus proposed for lower operation voltage. However, there is less investigation and study on the HPQC parameter design for minimum operation voltage when harmonic compensation is concerned.

In this paper, the HPQC design for minimum dc operation voltage under comprehensive fundamental and harmonic compensation is being proposed and introduced. Analysis and case study are also performed to show the advantage of the proposed HPQC design. Simulation and laboratory-scaled experimental results are presented to show effective reduction in dc operation voltage using the proposed HPQC design. Through the simulation and experimental case study and verification, there is a reduction of 15% in operation voltage using the proposed hybrid LC structure design compared with the conventional design. The proposed design does not add much additional cost and can also reduce the coupling inductance value. Similar analysis procedure may be also applied to other LC hybrid-structured active power compensators.

***IndexTerms* –HPQC,LC Hybrid Structure.**

I. INTRODUCTION

1.1.GENERAL

There are various techniques to relieve the unbalance problem, such as usage of Scott, YNvd, V/V, and impedance matching transformers. However, due to traction load variations, these solutions cannot completely compensate the unbalance problem. The reactive power and harmonic portions can be compensated by passive compensators such as capacitor banks and filters. Compared with passive compensators, active compensators can provide better dynamic and comprehensive compensation.

The most commonly used compensators in traction power supply are static VAR compensator (SVC) and static synchronous compensator (STATCOM). In [8], the compensation performance using SVC for voltage regulation of a 25-Kv traction is explored. However, its dynamic response is poor, and compensation results are not satisfactory when the load is varying. Furthermore, the high-power SVC occupies a large area. Hereafter, active power filter (APF) is proposed to provide fast and dynamic response. Unfortunately, the device rating of APF is still too high. Compensation device based on hybrid structure is therefore proposed for lower device rating.

II. Existing System:

HPQC was proposed for compensation in co-phase traction power supply. This approach is advantageous not only for reduction in system capacity and initial cost but also the reduction of converter switching operation loss compared with conventional co-phase traction power supply system. Main disadvantages of existing system is high initial cost and switching losses.

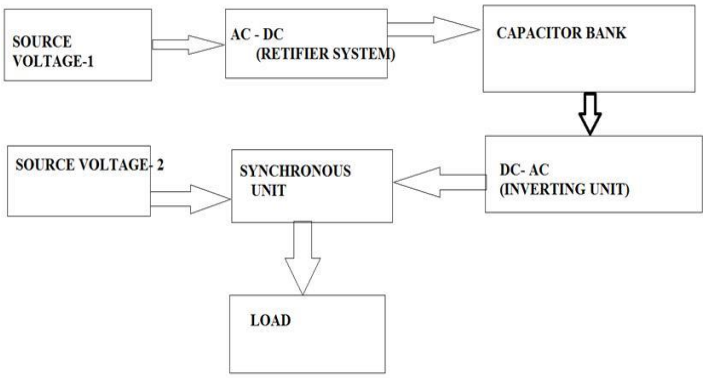

Figure. 2.1 Block diagram of Existing system

III. Proposed System:

Shunt hybrid power filter has been proved to be a useful approach to eliminate current harmonics caused by nonlinear loads. The passive power filter suppresses harmonic currents produced by the load, whereas the active power filter improves filtering characteristics of the passive filter.

Nowadays, the passive filter has many kinds of topologies. Among them, the single tuned passive filter has gained extensive interests because of its simplicity and practicability. Different from conventional design methods, a novel design method for the single tuned passive filter is proposed in this paper to minimize the rating of active power filter.

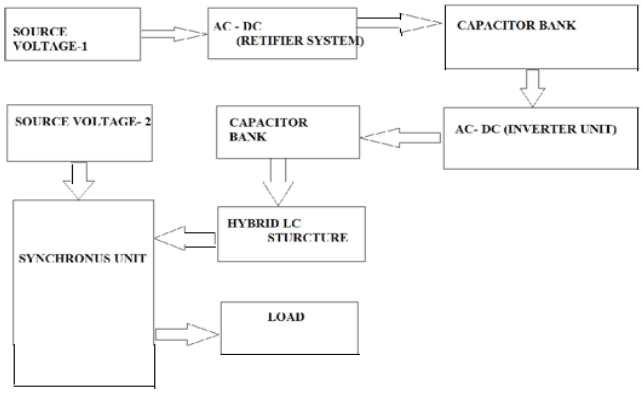

Figure. 3.1. block diagram of proposed system

IV. HARDWARE DESCRIPTION

4.1 Step down Transformer

A Step down Transformer is a type of transformer, which converts a high voltage at the primary side to a low voltage at the secondary side. If we speak in terms of the coil windings, the primary winding of a Step down Transformer has more turns than the secondary winding. The following image shows a typical step down transformer.

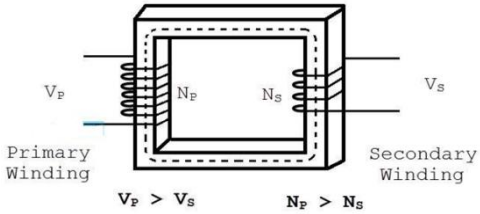

Figure. 4.1 step down transformer

4.2 Voltage Regulator

The 78xx (sometimes L78xx, LM78xx, MC78xx...) is a family of self-contained fixed linear voltage regulator integrated circuits. The 78xx family is commonly used in electronic circuits requiring a regulated power supply due to their ease-of-use and low cost. For ICs within the family, the xx is replaced with two digits, indicating the output voltage (for example, the 7805 has a 5 volt output).The 78xx lines are positive voltage regulators: they produce a voltage that is positive relative to a common ground. There is a related line of 79xx devices which are complementary negative voltage regulators. 78xx and 79xx ICs can be used in combination to provide positive and negative supply voltages in the same circuit.78xx series ICs do not require additional components to provide a constant, regulated source of power, making them easy to use, as well as economical and efficient uses of space.

Other voltage regulators may require additional components to set the output voltage level, or to assist in the regulation process. Some other designs (such as a switched-mode power supply) may need substantial engineering expertise to implement.
78xx series ICs have built-in protection against a circuit drawing too much power. They have protection against overheating and short-circuits, making them quite robust in most applications. In some cases, the current-limiting features of the 78xx devices can provide protection not only for the 78xx itself, but also for other parts of the circuit.

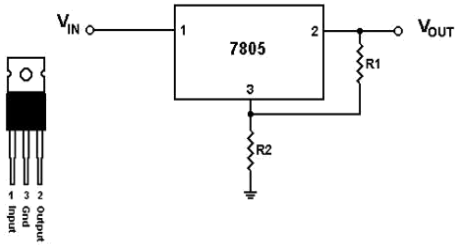

Figure.4.2.Voltage Regulator

4.3 Microcontroller

ATmega328 is an 8-bit and 28 Pins AVR Microcontroller, manufactured by Microchip, follows RISC Architecture and has a flash type program memory of 32KB.It has an EEPROM memory of 1KB and its SRAM memory is of 2KB.It has 8 Pin for ADC operations, which all combines to form PortA (PA0 – PA7).It also has 3 builtin Timers, two of them are 8 Bit timers while the third one is 16-Bit Timer.You must have heard of Arduino UNO, UNO is based on atmega328 Microcontroller.It's UNO's heart.It operates ranging from 3.3V to 5.5V but normally we use 5V as a standard.Its excellent features include the cost efficiency, low power dissipation, programming lock for security purposes, real timer counter with separate oscillator.It's normally used in embeddedsystem

applications. You should have a look at these Real Life Examples of Embedded Systems, we can design all of them using this Microcontroller.

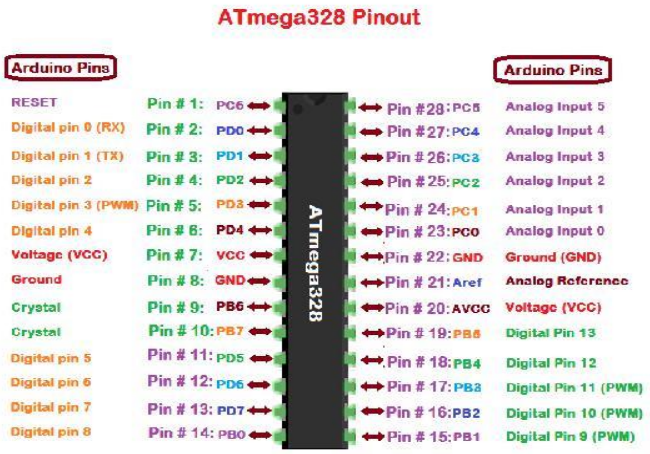

Figure. 4.3. ATMEGA 328 pin configuration

4.4. MOSFET-IRF840

The **IRF840** is an N-Channel Power MOSFET which can switch loads upto 500V. The MOSFET could switch loads that consume upto 8A, it can turned on by provide a gate threshold voltage of 10V across the Gate and Source pin. Since the mosfet is for switching high current high voltage loads it has a relatively high gate voltage, hence cannot be used directly with a I/O pin of a CPU. If you prefer a MOSFET with low gate voltage then try IRF540N or 2N7002 etc.

One considerable disadvantage of the IRF840 MOSFET is its high on-resistance (RDS) value which is about 0.85 ohms. Hence this MOSFET cannot be used in applications where high switching efficiency is required. The MOSFET requires a driver circuit to provide 10V to the gate pin of this MOSFET the simplest driver circuit can be build using a transistor. It is relatively cheap and has very low thermal resistance, added to this the MOSFET also has good switching speeds and hence can be used in DC-DC converter circuits.

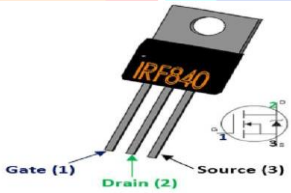

Figure. 4.4. MOSFET –IRF840

4.5. OPTOCOUPLER

The optocoupler also called as opto-isolator, photocoupler, or optical isolator, is a component that transfers electrical signals between two isolated circuits by using light. Opto-isolators prevent high voltages from affecting the system receiving the signal. Commercially available opto-isolators withstand input-to-output voltages up to 10 kV and voltage transients with speeds up to 10 kV/µs.

A common type of opto-isolator consists of an LED and a phototransistor in the same package. Opto-isolators are usually used for transmission of digital (on/off) signals, but some techniques allow use with analog (proportional) signals.An opto-isolator contains a source (emitter) of light, almost always a near infrared light-emitting diode (LED), that converts electrical input signal into light, a closed optical channel (also called dielectrical channel), and a photo sensor, which detects incoming light and either generates electric energy directly, or modulates electric current flowing from an external power supply.

The sensor can be a photo resistor, a photodiode, a phototransistor, a silicon-controlled rectifier (SCR) or a triac. An optocoupled solid state relay contains a photodiode opto-isolator which drives a power switch, usually a complementary pair of MOSFETs. A slotted optical switch contains a source of light and a sensor, but its optical channel is open, allowing modulation of light by external objects obstructing the path of light or reflecting light into the sensor.

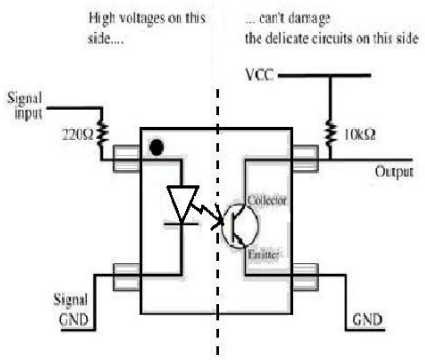

Figure.4.5. Schematic Diagram of Optocoupler

V. SYSTEM IMPLMENTATION

5.1 MODULES

i. Harmonic Compensation
ii. Fundamental compensation
iii. HPQC Operation Voltage with the Proposed Design
iv. Converter Topology

5.1.1. Harmonic Compensation

Although fundamental system unbalance and reactive power compensation occupy the major portion of power quality compensation capacity, harmonic compensation cannot be neglected as it will also add to the overall compensator operation voltage requirement. With reference to, it can be observed that the discussion relates also to the harmonic impedance that an optimum selection of coupled inductance *La* and *Ca* must be chosen to minimize the harmonic operation voltage *V*invaLCh.

5.1.2 Fundamental compensation

Fundamental compensation in co-phase traction power supply includes basic compensation for system unbalance and reactive power. In short, the operation voltage for fundamental compensation is the required operation voltage to provide power quality compensation (of system unbalance and reactive power) without harmonic compensation.

It dominates the major portion of power quality compensation, as harmonics are usually less significant compared with reactive power and system unbalance in a power system.

5.1.3 HPQC Operation Voltage With the Proposed Design

As for the HPQC dc link operation voltage, it may be calculated as square root 2 times of the HPQC operation voltage, i.e., *V*invaLC, as expressed, shown at the bottom of the page.

5.1.4 Converter Topology

It can be observed that both the conventional RPC and the proposed HPQC are a back-to-back converter with a common dc link. The major difference between them is the V ac phase coupled structure. In the conventional RPC, it is an inductive coupled structure, and in the proposed HPQC, it is a hybrid inductor–capacitor (*LC*) capacitive coupled structure. The passive structure in HPQC can help to reduce the operation voltage during compensation. This will be covered in the next subsection.

VI. SYSTEM DESIGN

6.1 COMPARISONS BETWEEN COPHASE TRACTION WITH CONVENTIONAL RPC AND PROPOSED HPQC

First of all, the compensation theory is briefly introduced. The system configurations of a typical co-phase traction power with the conventional RPC and the proposed HPQC are shown in Figs6.1 and 6.2 respectively.

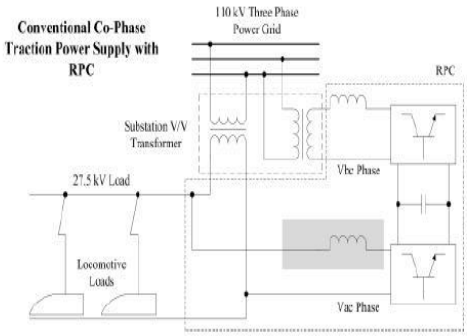

Figure. 6.1 conventional co-phase traction power supply system

The power quality compensator is connected across the transformer. The required primary source current *Ia*, *Ib*, and *Ic*, as well as the power angles, can be calculated. This can be then transformed into secondary side current, which can be used to deduce the compensating current by simple circuit analysis. The parameters *K*1 and *K*2 can be thus determined.

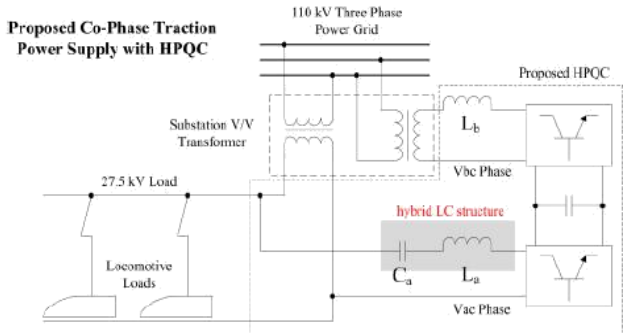

Figure. 6.2 proposed co-phase traction power supply with HPQC

Detailed derivations of constants $K1 = 0.5$ and $K2 = 0.2887$ were explained and for full compensation. It is worth noticing that the negative sign, refers to power absorption and the two converters in co-phase power compensator. During compensation, active and reactive power is absorbed from one phase and transferred to another phase. The two converters in HPQC thus have different power transfer functions. Based on the instantaneous theory the compensator control system block diagram is presented in Fig.6.3

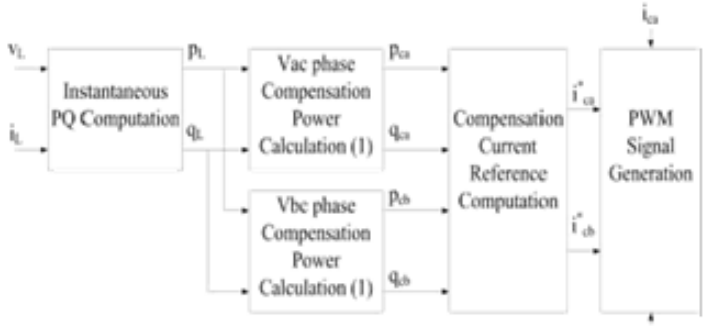

Figure. 6.3 block diagram of compensation of co-phase traction power supply

The instantaneous load active and reactive power is first computed and is used to determine the required compensation power *pca*, *qca*, *pcb*, and *qcb* and, thus, the required compensation current. They are used to generate pulse width modulation (PWM) signals, which are used to control the electronic switches insulated-gate bipolar transistors within the compensator to output the required compensation current. The discussions that follow are developed based on the theory above. Differences of configuration and operation of the conventional RPC and the proposed HPQC are discussed.

6.1.1 Converter Topology

With reference to Figs 6.1 and 6.2, it can be observed that both the conventional RPC and the proposed HPQC are a back-to-back converter with a common dc link. The major difference between them is the Vac phase coupled structure. In the conventional RPC, it is an inductive coupled structure, and in the proposed HPQC, it is a hybrid inductor–capacitor (*LC*) capacitive coupled structure. The passive structure in HPQC can help to reduce the operation voltage during compensation. This will be covered in the next subsection.

6.1.2 Operation Voltage

In addition to converter topology, another difference is that the operation voltage of the proposed HPQC is lower than that of the conventional RPC. The vector diagram showing their operation voltage is presented in Fig. 6.4. The mathematical relationship is shown in the following:

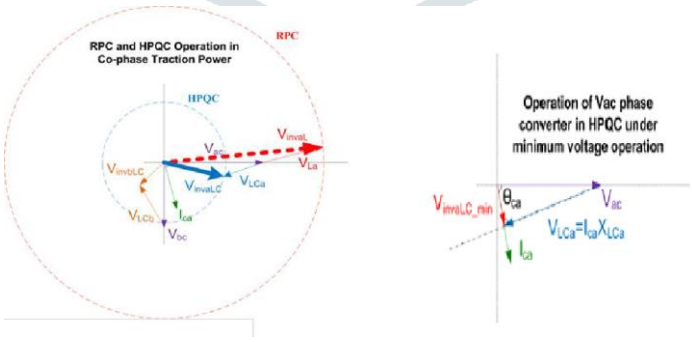

Figure. 6.4. vector diagram of operation voltage

It can be observed that, in contrast to the conventional RPC, when reactive current passes through the hybrid *LC* capacitive coupled structure in the proposed HPQC, there is a positive active power drop across the source and the converter side. The operation voltage of the proposed HPQC can be thus lower than Vac point-of-common-coupling (PCC) voltage while providing similar compensation performance like the conventional RPC. The HPQC operation voltage can be minimized when an appropriate coupled impedance value is being selected.

By taking the first derivative, with respect to *X*LCa and setting the result to zero, the value of *X*LC where *V*invaLC is at extreme point can be then obtained, as given in (6), where *θca* refers to the power angle of the Vac compensation current *Ica*. Fig. 6.1.2 explained this minimum peration voltage using avector diagram, in which *V*invLC_min=*V*invaLC_min, which is consistent with the mathematical analysis. Thus, In short, the HPQC operation voltage is reduced via coupling impedance design. Since locomotives are

mostly composed of motors and are inductive, a capacitive coupled structure can help to eliminate the inductive reactive power and thus reduce the compensation requirement and operation voltage of the compensator.

Based on the discussions above, it can be seen that the addition of coupling capacitor in HPQC is advantageous for reduced operation voltage compared with RPC while providing similar performance. Reduction in operation voltage can help to reduce the cost and switching power loss.

6.2. COMPREHENSIVE HPQC COMPENSATOR PARAMETER DESIGN BASED ON MINIMUM OPERATION VOLTAGE

The usage of HPQC operation voltage may be divided according to two purposes: fundamental (*V*invaLC1) and harmonic (*V*invaLCh) compensation. This idea may be mathematically represented, and the parameters are defined In traction load, fundamental compensation occupies most of the compensation capacity. Here, the comprehensive HPQC design will be presented based on the criteria of minimizing the operation voltage for providing these two compensation modes.

6.2.1 HPQC Design of Minimum Operation Voltage for Fundamental Compensation

In co phase traction power supply includes basic compensation for system unbalance and reactive power. In short, the operation voltage for un da mental compensation is the required operation voltage to provide power quality compensation (of system unbalance and reactive power) without harmonic compensation. It dominates the major portion of power quality compensation, as harmonics are usually less significant compared with reactive power and system unbalance in a power system. The design of HPQC Vac coupled impedance has been discussed in the previous section. The optimum parameter selection of Vac phase coupled impedance *X*LCa may be also determined with *X*LCa and setting it as zero.Notice that the negative sign in the expression refer to a capacitive coupled impedance.

6.2.2 HPQC Design of Minimum Operation Voltage for Harmonic Compensation

Although fundamental system unbalance and reactive power compensation occupy the major portion of power quality compensation capacity, harmonic compensation cannot be neglected as it will also add to the overall compensator operation voltage requirement. it can be observed that the discussion relates also to the harmonic impedance that an optimum selection of coupled inductance *La* and *Ca* must be chosen to minimize the harmonic operation voltage *V*invaLCh. Here, the discussion of the HPQC design is presented based on the criteria of minimum fundamental operation voltage *V*invaLC1. In other words, the parameter design for minimum The graph of *kC* against *kL* is plotted in Fig. 6.5.. It is worth noticing that the combinations in the shaded area are invalid since $kL < 0$ or $kC > 0$, which contradicts with the nature of inductor and capacitor impedance.

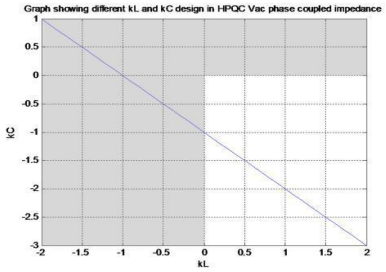

Figure. 6.5. kL &kC design in HPQC phase coupled impedance

Theoretically, the value of Vac phase coupled inductance and capacitance can be chosen along the line in the unshaded area in Fig.6.5. However, with harmonic compensation consideration, the effect of harmonic impedance on the operation voltage should be also included. With reference to the expression in, the impedance at the *h*th harmonics can be expressed as *X*LCah but also on the load harmonic current *I*Lh. Load current harmonics are usually expressed as a percentage of fundamental current. Assuming that the load harmonic current at the *h*th harmonic is *rh* times of fundamental and considering the relationship between Vac phase compensation current *Ica* and fundamental load current *IL*1, the load harmonics can be then expressed. For simplicity, the denominator is defined as *A* in the contents that follow.

VII. CASE STUDY & SIMULATION

In order to verify the theory and analysis developed during the discussion for HPQC parameter design for minimum operation voltage in fundamental and harmonic compensation, a case study has been done. Shown in Table I is the practical on-site data of the harmonic distribution in traction load of the Wu Qing substation in China. Traction load power factor usually ranges from 0.8 to 0.9, with an average of 0.85. The analysis that follows is performed based on these assumptions. As introduced, the operation voltage for HPQC using the proposed parameter design may be determined.

In order to eliminate the effect of PCC voltage in the analysis, the operation voltage is expressed in per unit, with base of *Vac*, as expressed, which shown at the bottom of the page. It can be observed from the expression that the HPQC operation voltage is dependent on load power factor, harmonics, and HPQC coupled impedance (both inductance and capacitance). By substituting the data in Table I into , the value of *kL* in the proposed design can be determined as 0.023. The corresponding HPQC operation voltage rating is calculated,and the value is 0.4833. This value is close to the minimum HPQC operation for fundamental compensation, i.e., 0.48. The value corresponds to HPQC dc link voltage of around 18.7 kV for a 27.5-kV PCC voltage. Notice that, conventionally, the coupled inductance and capacitance parameter in a hybrid structured compensator is tuned at the frequency where system harmonics are mostly concentrated.

In the WuQing substation, this corresponds to the third harmonics, whose *kL* value is around 0.125, and is actually not the point of minimum operation voltage. This shows that different from the conventional design, the HPQC operation voltage can be minimized under comprehensive compensation (including harmonics) using the proposed design procedure.

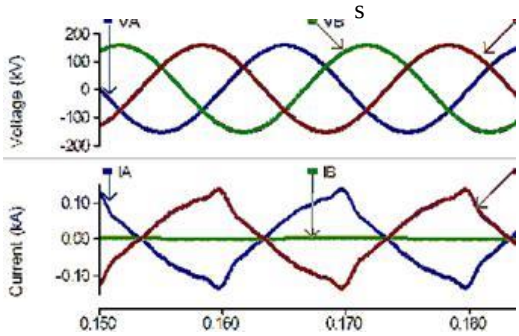

Figure. 7.1 . Simulated three phase source voltage and Current waveforms obtained without power quality compensation.

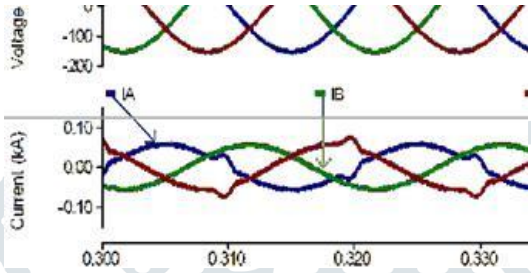

Fig 7.2. Simulated three phase source voltage and current waveforms obtained for co-phase traction power supply system with HPQC of Vac phase coupled LC values tuned at 3rd harmonics.

In order to do further verifications, simulations are done using PSCAD. The circuit schematics can be found in The substation transformer is composed of two single-phase transformers with V/V connections. The parameters within the simulation are selected based on the existing practical traction power supply system. The three-phase power grid is around 110 kV, and the traction load is around 27.5 kV. The traction load is round 15 MVA, and the load power factor is around 0.85.The system source impedance is calculated as 2 mH according to the short-circuit capacity of common traction power supply of 750 MVA.

The load harmonics are designed according to the data in Table I, whose higher peak load current condition is being selected. In the simulation, the system source current unbalance and harmonic distortions are being monitored, and the three-phase source power factor is calculated according to IEEE Standard 1459-2010 "Definitions for the Measurement of Electric Power Quantities Under Sinusoidal Non-sinusoidal, Balanced or Unbalanced Conditions." The system source voltage and current waveforms without power quality compensation are shown in Fig. 7. The system source current unbalance is 100%, with harmonic distortions of 14.7%, whereas the three-phase source power factor is only 0.6. Obviously, the system source power quality is far from satisfactory. Power quality compensation is thus required. In order to provide comprehensive power quality compensation of system unbalance, reactive power, and harmonics, HPQC is connected across the two substation single-phase outputs and is switched in. Two conditions are being simulated, namely, HPQC Vac phase coupled *LC* values tuned at third harmonic frequency and HPQC Vac phase coupled *LC* values using the proposed design.

The parameter setting is chosen according to the theory developed and is shown in Table II. Notice that the overall Vac phase fundamental coupled impedance is exactly the same, which offers the minimum HPQC operation voltage during fundamental compensation, in the two conditions. The only difference is the value of *LC* parameters. Details of the simulation results and analysis are shown in the following.

Condition	La	Ca	Lb
A. LC tuned at 3rd harmonics	19.7mH	57 Uf	8 mH
B. Proposed Design	6.6 mH	62.2Uf	8 mH

TABLE 7.1
HPQC parameter setting in two simulated conditions

Condition	Source Cur rent TH D	Source Current Unbalance	Source Power Factor
Without Compensation	14. 7%	99%	0.6
A. LC tuned at 3rd Harmonics	21%	8%	0.9944
B. Proposed Design	2.2 %	4%	0.9998

TABLE 7.1 summarised simulated performance

7.1. HPQC Vac Phase Coupled LC Values Tuned at Third Harmonic Frequency (VDC = 18.7 kV)

First of all, the parameter design for hybrid filter, being used in most research studies, is simulated. It has been suggested in various research studies that the inductance and capacitance values in the *LC* branch of hybrid filter can be tuned to the frequency where system harmonics are mostly concentrated to minimize the operation voltage.

For instance, according to the data in Table I, the load harmonics are mostly concentrated at the third harmonics. Therefore, in this simulation subsection, the HPQC Vac phase coupled *LC* values are tuned to the third harmonics, and the parameters are shown in Table II. The dc link voltage used is 18.7 kV, which can be concluded, to show the pros of the proposed HPQC design. The simulated three-phase source voltage and current waveforms are shown in Fig. 8. It can be observed that the system source current unbalance and harmonics are not completely eliminated. The system source current harmonic distortion is 21%, whereas its unbalance is 8%. The harmonic compensation performance is thus not satisfactory.

Load Power Factor	**Before Compensation**			**After compensation using propo sed HPQC parameter**		
	THD	Unbalance	PF	THD	Unbalance	PF
0.1	14.7	100	0.0709	25.00	21.0	0.9721
0.2	14.7	100	0.1417	10.04	13.0	0.9849
0.3	14.7	100	0.2124	6.49	9.2	0.9933
0.4	14.7	100	0.2817	5.40	7.06	0.9960
0.5	14.7	100	0.3538	4.29	5.56	0.9975
0.6	14.7	100	0.4474	3.84	4.95	0.9981
0.7	14.7	100	0.5062	3.18	4.34	0.9983
0.8	14.7	100	0.5658	3.45	3.85	0.9987

0.9	14.7	100	0.6365	24.59	15.67	0.9817
1.0	14.7	100	0.7144	52.39	33.19	0.9345

TABLE 7.2.SIMULATION RESULTS FOR HPQC COMPENSATION WITH PROPOSED SYSTEM

7.2 HPQC Vac Phase Coupled LC Values Using the Proposed Design (VDC = 18.7 kV)

Next, the system performance of HPQC with the proposed parameter design under harmonic compensation is investigated.The HPQC operation voltage rating is around 0.4833 using the proposed parameter design under the specified condition. This corresponds to a dc link voltage of around 18.7 kV for a 27.5-kV PCC voltage. It can be observed that the threephase source current harmonics and unbalance are eliminated.

Furthermore, the reactive power is als o compensated. This can be verified by its harmonic distortions of 2.2%, unbalance of 4%, and power factor of 0.99. A summarized system performance obtained from the simulations mentioned is shown in Table 7.2.

7.3. HPQC Vac Phase Coupled LC Values Using the Proposed Design Under Different Load Power Factor Conditions (VDC = 18.7 kV)

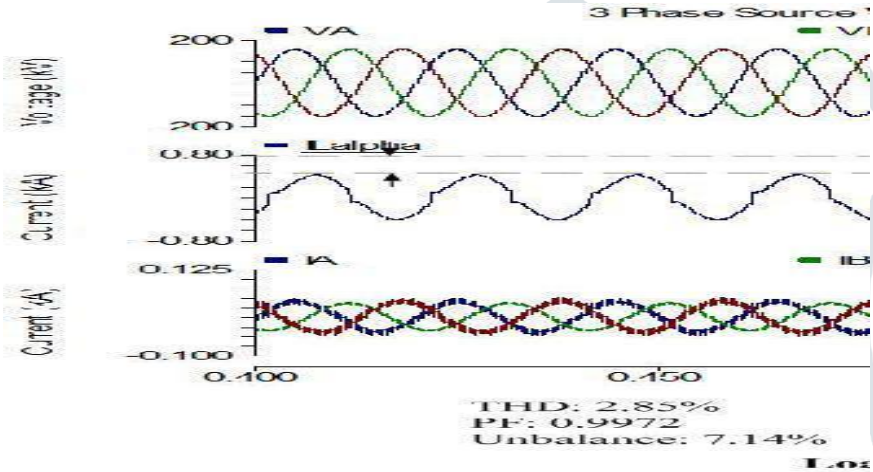

Figure 7.3. 3 phase source voltage and current wave forms

In order to evaluate the power quality compensation ability of HPQC with the proposed design, simulations are done again under different load power factor conditions. Notice that critical conditions of totally load active or reactive power are also included to have comprehensive investigations. It can be observed from the results that the designed HPQC can provide satisfactory power quality compensation for wide range of reactive power, except for conditions near loadings with totally reactive power or active power. This can be explained by parameter design exceeding designed range for heavy reactive power loading and insufficient dc link

VIII. EXPIRIMENTAL VERIFICATION:

8.1. Co-phase Traction Power Without Compensation

In order to verify the system performances of the proposed co-phase traction power supply system with HPQC of minimum operation voltage and its corresponding design under comprehensive compensation, including harmonic consideration, a low-capacity laboratory-scaled hardware prototype is constructed. It can be observed from (23) that the HPQC operation voltage is proportional to the PCC voltage *Vac* and is independent of fundamental loading capacity. Therefore, the validity of the proposed HPQC in reducing operation voltage can be verified using this low-capacity hardware prototype.

The V/V transformer is composed of two 5-kVA single phase transformers. The traction load is represented using a rectifier $R-L$ circuit, with a linear capacity of 150 VA. The load resistance and inductance are around 10 Ω and 30 mH, respectively. The control of the compensation is accomplished using DSP2812 according to the control block diagram shown The operation voltage of *Vac* is 50 V.

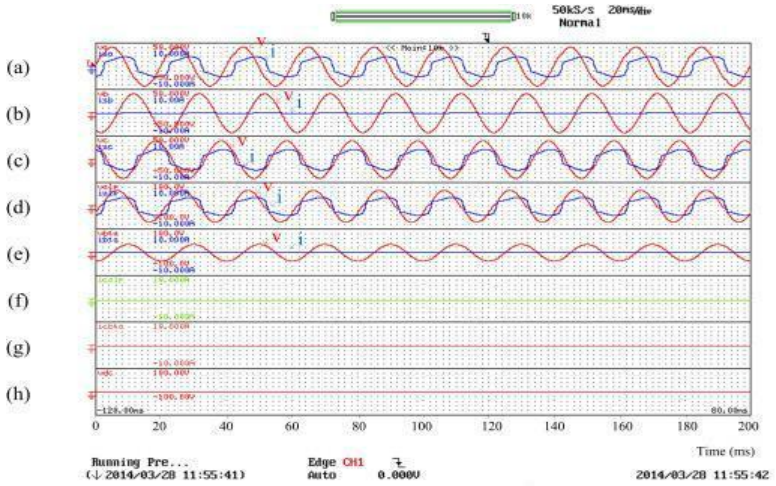

(a) system source voltage and current of phase A
(b) system source voltage and current of phase B;
(c) system source votlage and current of phase C;
(e) Vbc phase voltage and current at secodnary side;
(d) Vac phase votlage and current at the secondary side;
(f) Vac phase compensation

Figure. 8.1. Detailed experimental system waveform & for co-phase traction power supply without compensation

The presence of harmonics is caused by the nonlinear diode in the load rectifier and adds to the requirement of the HPQC operation voltage.The minimum dc link operation voltage for fundamental compensation is around 40 V. On the other hand, the dc link operation voltage is around 41 V using the proposed parameter design.

In the experiment with compensation, two conditions are being verified. Similar to the simulation, the two conditions are HPQC with parameters LC tuned at 3rd harmonics
(A) and Proposed Design (B). The detailed parameters are shown in Table V. The system waveforms are captured using a Yokogawa DL750 16-channel Scope Corder oscilloscope, and power quality is monitored using a Fluke43B single-phase power quality analyzer. Captured waveforms and screens are presented.

8.2. Co-phase Traction Power With HPQC Using the Conventional Design:

First, the system performance of co-phase traction power without compensation is investigated. The system waveforms obtained are shown in Fig. 12. Absence of waveforms at Fig. 12(f)–(h) indicates absence of power quality conditioner. Waveform with larger amplitude refers to the voltage, whereas that with a smaller one refers to the current.

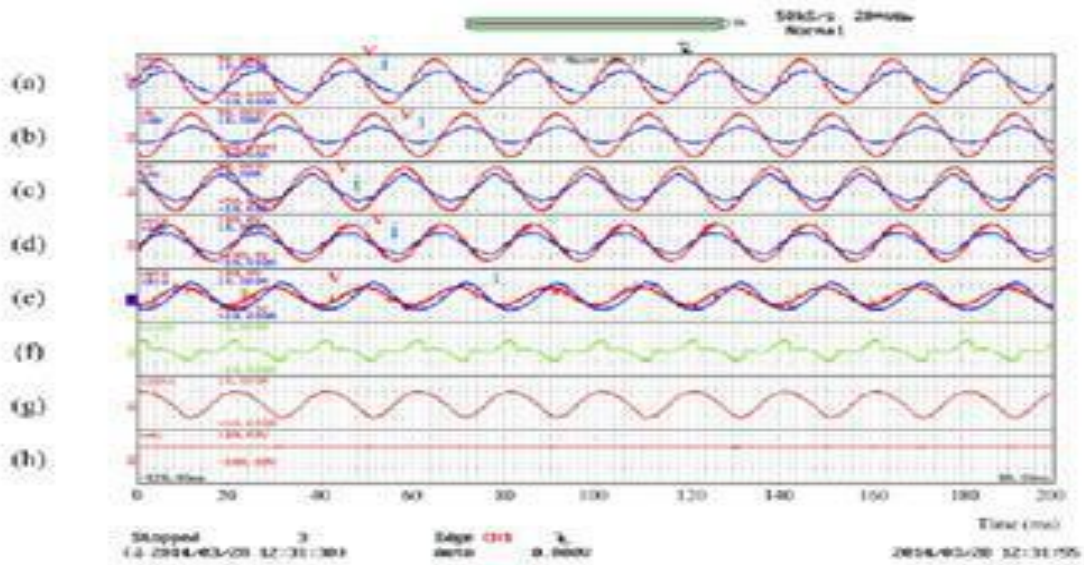

(a) system source voltage and current of phase A
(b) system source voltage and current of phase B;
(c) system source votlage and current of phase C;
(d). Vac phase votlage a nd current at the secondary sidel
(e) Vbc phase voltage and current at seco dnary side;
(f) Vac phase compensation current;

(g) Vbc phase compensatio n current;
(h) DC link voltage.

Figure. 8.2 Detailed experimental system waveforms captured for co-phase traction power supply with conventional HPQC design tuned at third harmonic

8.3. Co-phase Traction Power With Compensation With HPQC Using the Proposed Design

Next, experimental results are done with co-phase traction power supply with HPQC compensation using the conventional parameter design. In other words, the Vac phase coupled inductance *La* and capacitance *Ca* is slected such that its resonant frequency is located at the third harmonics, where load harmonics are mostly concentrated (refer to Table I for reference). The HPQC circuit parameters are shown in Table III. In order to compare the performance with HPQC of the proposed design, the same dc link voltage of 41 V is being chosen. The system waveforms obtained through experimental results are shown in Fig. 13. It can be observed that, with the same dc link voltage, the three-phase source current waveforms suffer from obvious harmonic distortion, particularly at phase C current. This indicates that the compensation performance is not satisfactory when using HPQC of the conventional coupled impedance design. The system source current still suffers from significant harmonic problem.

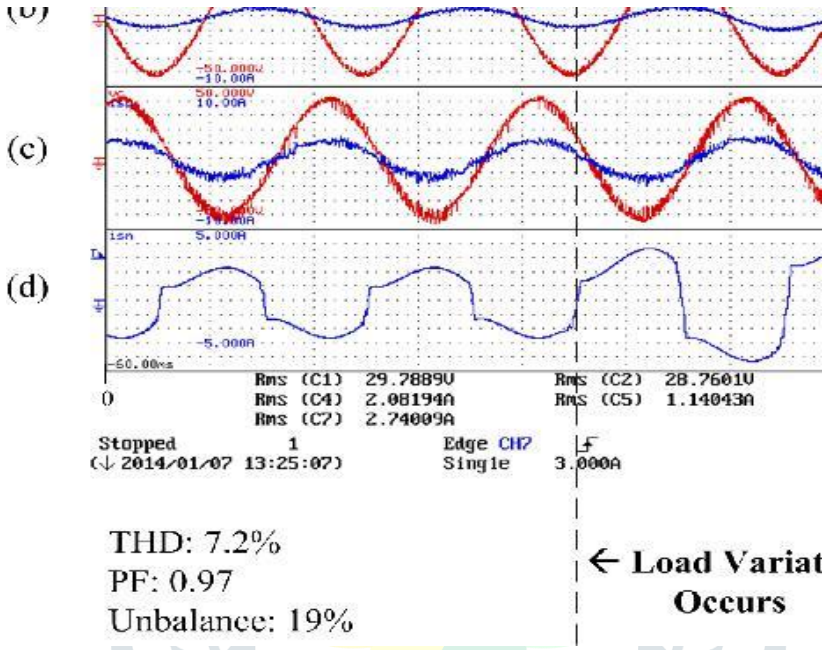

(b) phase B
(c) phase C;
(d) load current.

Figure. 8.3. Experimental system waveforms for co-ph ase traction power supply with HPQC of proposed parameter design under load variations, system voltage and current waveforms

Next, experiments are conducted on the laboratory-scaled cophase traction power with HPQC using the proposed HPQC parameter design in this paper. The dc link voltage is also set as 41 V, according to the discussions and calculations.

It can be observed that, compared with those in Fig.8.4 the three-phase source current becomes balanced, and harmonics are eliminated. The total harmonic distortion is reduced to within 3%, while the system unbalance is also reduced. For comparisons, summarized data of system statistics without compensation and with HPQC compensation using the proposed and conventional parameter designs (*Vdc* = 41 V) are shown in Table VI. Recorded waveforms and power quality data for the three phases of the primary source grid are can be observed from the figures that, before compensation, the three-phase power is unbalanced and is mostly concentrated at phase A and phase B.

CONCLUSION

In this paper, the *LC* parameter design in HPQC has been investigated for reduction of the operation voltage under fundamental and harmonic compensation. HPQC is previously proposed for reduction in operation voltage when providing power quality compensation in co-phase traction power. It works by introducing a capacitive *LC* branch as the coupled impedance. However, the design is mostly focused on fundamental compensation. Normally, the *LC* parameter is chosen at the frequency where load harmonic contents are mostly concentrated at for minimum compensator operation voltage, but the design lacks theoretical support.

The HPQC design with minimum dc operation voltage for power quality compensation in co-phase traction power supply system under the presence of load harmonics is being explored. The power quality compensation principle in co-phase traction power supply is being reviewed, and HPQC is compared with conventional RPC to show the advantage of lower operation voltage and device ratings in HPQC. Based on the presence of load harmonics, the comprehensive design for HPQC is mathematically derived. It is shown

that, under harmonic compensation, with a proper *LC* parameter design, a lower dc voltage operation can be achieved. This can eventually reduce the initial cost and switching loss.

It is obtained through simulation and experimental verification that, with the proposed *LC* parameter design, there is a 15% further reduction in operation voltage compared with the conventional one, leading to a total of 43% reduction compared with the conventional RPC. Further study of the project includes proposing design so that HPQC can provide compensation for wider loading range.

REFERENCES

[1] T. Pee-Chin, L. Poh Chiang, and G. H. Donald, "Optimal impedance termination of 25-kV electrified railway systems for improved power quality," *IEEE Trans. Power Del.*, vol. 20, no. 2, pp. 1703–1710, Apr. 2005.

[2] S. T. Senini and P. J. Wolfs, "Novel topology for correction of unbalanced load in single phase electric traction systems," in *Proc. IEEE Annu. Power Electron. Spec. Conf.*, Cairns, Australia, Jun. 2002, pp. 1208–1212.

[3] L. Gao, X. Yonghai, X. Xiangnin, L. Yingying, and J. Peisi, "Analysis of adverse effects on the public power grid brought by traction powersupply system," in *Proc. IEEE Elect. Power Energy Conf.*, Vancouver, BC, Canada, 2008, pp. 1–7.

[4] N. Y. Dai, K. W. Lao, M. C. Wong, and C. K. Wong, "Hybrid power quality conditioner for co-phase power supply system in electrical railway," *IET Power Electron.*, vol. 5, no. 7, pp. 1084–1094, Aug. 2012.

[5] A. Dolara, M. Gualdoni, and S. Leva, "Impact of high-voltage primary supply lines in the 2 times 25 kV-50 Hz railway system on the equivalent impedance at pantograph terminals," *IEEE Trans. Power Del.*, vol. 27, no. 1, pp. 164–175, Aug. 2012.

[6] Z. Shu, S. Xie, and Q. Li, "Development and implementation of a prototype for co-phase traction power supply system," in *Proc. APPEEC*, 2010, pp. 1–4.

[7] Z. Shu, S. Xie, and Q. Li, "Single-phase back-to-back converter for active power balancing, reactive power compensation and harmonic filtering in traction power system," *IEEE Trans. Power Electron.*,vol.26, no.2,pp. 334–343, Feb.2011.

[8] G. Celli, F. Pilo, and S. B. Tennakoon, "Voltage regulation of 25 kV ac railway systems by using thyristor switched capacitor," in *Proc. 9th Int. Conf. Harmonics Quality Power*, 2000, vol. 2, pp. 633–638.

[9] P.-C. Tan, P. C. Loh, and D. G. Holmes, "A robust multilevel hybrid compensation system for 25-kV electrified railway applications," *IEEE Trans. Power Electron.*, vol. 19, no. 4, pp. 1043–1052, Jul. 2004.

[10] U. Tetsuo and I. Shouji, "Railway static power conditioner field test," *Q. Rep. RTRI*, vol. 45, no. 2, pp. 64–67, 2004