SINGLE AXIS SOLAR PANEL TRACKER AND POWER OPTIMIZATION USING PIC-MICROCONTROLLER

Mr. Gouse Basha Mulla[1], P. Preethi[2], Pooja Choudhary[3], K. Dheemanth[4].

[1]Assistant Professor, Geethanjali College of Engineering and Technology, Telangana, INDIA.

[2,3,4]Graduating student, Geethanjali College of Engineering and Technology, Telangana, INDIA.

Abstract: In this project we explain about solar tracking system using a combination of micro-controller, DC motor and light dependent resistors (LDR's) with the primary aim of improving the power efficiency of the solar panels. The main component of this tracker is PIC16F72 micro-controller which is programmed to detect the sunlight with the help of LDRs and then actuate the DC motor to position the solar panel in such a way so that it gets the maximum sunlight. Thus, this system can achieve maximum illumination and can reduce the cost of electricity generation by requiring minimum number of solar panels with proper orientation with the sunlight. This work is an application development done in college project.

Keywords: Power Optimization, Solar Panel, LDR's, DC Motor, PIC 16F72 Microcontroller.

1.INTRODUCTION: The purpose of this project is to design and construct a solar tracker system that follows the sun direction for producing maximum output for solar powered applications. Achieving balance between power consumption and power production is a bigger challenge today. The best way to solve this imbalanced equation is to use solar energy as efficiently as possible. The problem in the usage of solar energy is with solar cell panel should be exposed maximum to the sun light. If the solar panel is fixed in a particular direction then the sun light intensity varies from morning to evening. Moving the solar cell panel in the direction of sun can increase the solar energy generated from the solar cell. This project consists of few sun light sensors and a motorized mechanism for rotating the panel in the direction of sun. Microcontroller based control system takes care of sensing sunlight and controlling the motorized mechanism. This system works continuously without any interruption.

2. BLOCK DIAGRAM:

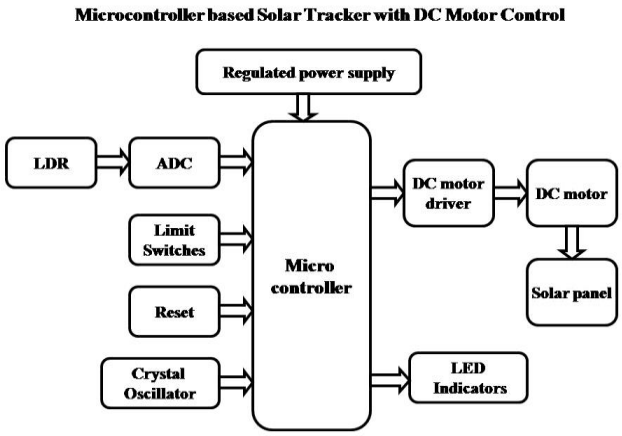

Fig.1 Block Diagram

2.1 REGULATED POWER SUPPLY:

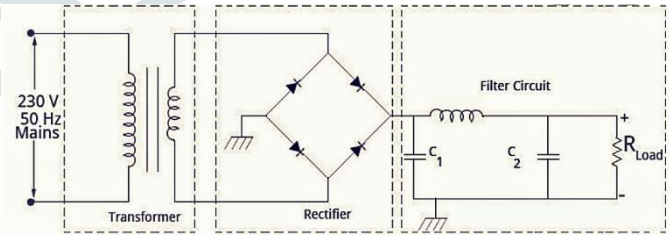

Fig.2.1 Circuit Diagram of Regulated Power Supply.

The Regulated supply here is used in conversion of 230V 50 Hz supply to 12 V DC supply to Charge PIC Microcontroller.

- Transformer – Steps Down 230v AC to 12V AC supply.
- Rectifier – Converts 12V AC to 12V DC varying output supply.
- Filter Circuit – filters the varying DC supply by sending small ripples.
- Regulator – Eliminates the ripple by setting DC supply to a Fixed Voltage i.e., 12V.

2.2 PIC 16F72 Microcontroller:

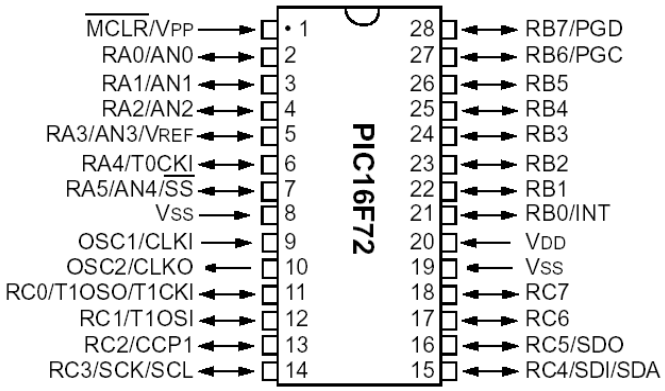

Fig.2.2 PIC 16F72 Microcontroller Pin Description.

Specifications:

Microcontroller: PIC 16F72 PIC-Microcontroller.
Operating voltage: 5V, Input Voltage Recommended (9V-12V).
Speed: Harvard Architecture, RISC architecture, 1 instruction cycle = 4 clock cycles.
Programmable timers and on-chip ADC.
The PIC16F72 CMOS FLASH-based 8-bit microcontroller is upward compatible with PIC16C72/72A and PIC16F872devices. It features 200 ns instruction execution, self-programming, an ICD, 2 Comparators, 5 channels of 8-bit Analog-to-Digital (A/D) converter, 2 capture/compare/PWM functions, a synchronous serial port that can be configured as either 3-wire SPI or 2-wire I2C bus, a USART, and a Parallel Slave Port.

2.3 LDR:

A **Light Dependent Resistor** (also known as a photoresistor or LDR) is a device whose resistivity is a function of the incident electromagnetic radiation. Hence, they are light-sensitive devices. They are also called as photoconductors, photoconductive cells or simply photocells.

Fig 2.3 Symbol of LDR

A photo resistor is made of a high resistance semiconductor. If light falling on the device is of high enough frequency, photons absorbed by the semiconductor give bound electrons enough energy to jump into the conduction band. The resulting free electron (and its hole partner) conduct electricity, thereby lowering resistance.

2.4 DC Motor:

A dc motor uses electrical energy to produce mechanical energy, very typically through the interaction of magnetic fields and current carrying conductors. The reverse process, producing electrical energy from mechanical energy, is accomplished by an alternator, generator or dynamo. Many types of electric motors can be run as generators, and vice versa. The input of a DC motor is current/voltage and its output is torque (speed).

Fig.2.4 DC Motor

Operation:

The DC motor you will find in modem industrial applications operates very similarly to the simple DC motor described earlier in this chapter. Figure 12-9 shows an electrical diagram of a simple DC motor. Notice that the DC voltage is applied directly to the field winding and the brushes. The armature and the field are both shown as a coil of wire. In later diagrams, a field resistor will be added in series with the field to control the motor speed. When voltage is applied to the motor, current begins to flow through the field coil from the negative terminal to the positive terminal. This sets up a strong magnetic field in the field winding. Current also begins to flow through the brushes into a commutator segment and then through an armature coil. The current continues to flow through the coil back to the brush that is attached to other end of the coil and returns to the DC power source. The current flowing in the armature coil sets up a strong magnetic field in the armature.

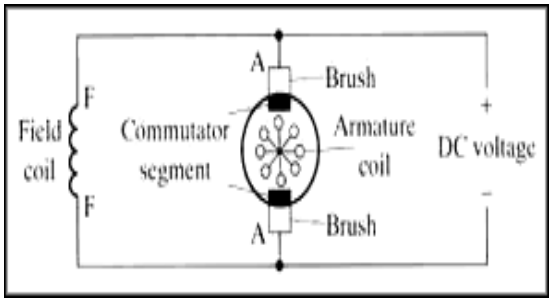

Fig 2.4.1: Simple Electrical Diagram of DC Motor

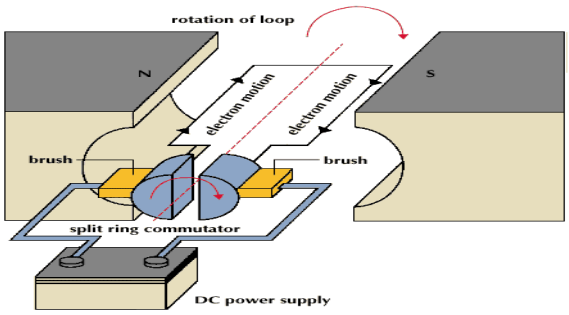

Fig 2.4.2: Operation of a DC Motor

The magnetic field in the armature and field coil causes the armature to begin to rotate. This occurs by the unlike magnetic poles attracting each other and the like magnetic poles repelling each other. As the armature begins to rotate, the commutator segments will also begin to move under the brushes. As an individual commutator segment moves under the brush connected to positive voltage, it will become positive, and when it moves under a brush connected to negative voltage it will become negative. In this way, the commutator segments continually change polarity from positive to negative. Since the commutator segments are connected to the ends of the wires that make up the field winding in the armature, it causes the magnetic field in the armature to change polarity continually from north pole to south pole. The commutator segments and brushes are aligned in such a way that the switch in polarity of the armature coincides with the location of the armature's magnetic field and the field winding's magnetic field. The switching action is timed so that the armature will not lock up magnetically with the field. Instead the magnetic fields tend to build on each other and provide additional torque to keep the motor shaft rotating.

When the voltage is de-energized to the motor, the magnetic fields in the armature and the field winding will quickly diminish and the armature shaft's speed will begin to drop to zero. If voltage is applied to the motor again, the magnetic fields will strengthen and the armature will begin to rotate again.

2.5 DC Motor Driver:

H Bridge With switches:

An H bridge is an electronic circuit that enables a voltage to be applied across a load in either direction. These circuits are often used in robotics and other applications to allow DC motors to run forwards and backwards.

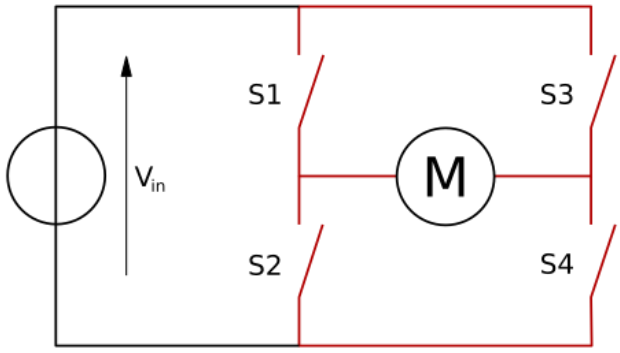

Fig.2.5 H-Bridge circuit

When the switches S1 and S4 (according to the first figure) are closed (and S2 and S3 are open) a positive voltage will be applied across the motor. By opening S1 and S4 switches and closing S2 and S3 switches, this voltage is reversed, allowing reverse operation of the motor.

Using the nomenclature above, the switches S1 and S2 should never be closed at the same time, as this would cause a short circuit on the input voltage source. The same applies to the switches S3 and S4. This condition is known as shoot-through.

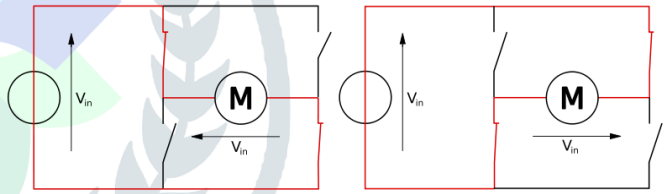

Fig 2.5.1 and fig 2.5.2 Operation of H-bridge in Forward and Reverse Condition.

S1	S2	S3	S4	Result
1	0	0	1	Motor moves right
0	1	1	0	Motor moves left
0	0	0	0	Motor free runs
0	1	0	1	Motor brakes
1	0	1	0	Motor brakes
1	1	0	0	Shoot-through
0	0	1	1	Shoot-through
1	1	1	1	Shoot-through

3. Circuit Diagram

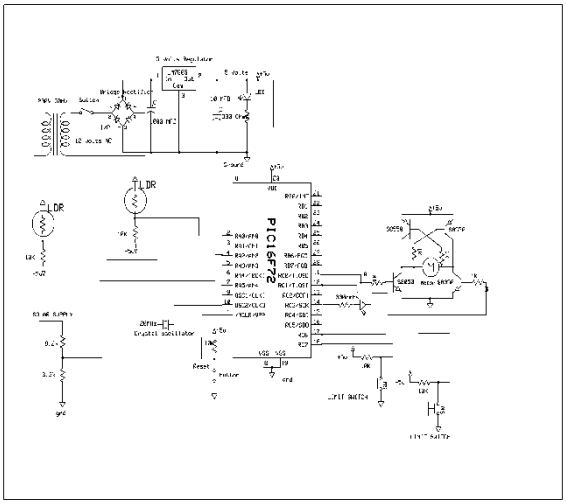

Fig. 3 Circuit Diagram of Single Axis Solar Tracker and Power Optimization Using PIC 16F72 Microcontroller

The above schematic diagram of bi-directional visitor's counter and display system with maximum capacity alarm explains the interfacing section of each component with micro controller. Crystal oscillator connected to 9th and 10th pins of micro controller, regulated power supply is also connected to micro controller and LDR's are also connected to micro controller through resistors.

4. Methodology:

The whole project is basically divided into two parts hardware and software. The rps is used to charge the microcontroller in order to perform specified instructions. It consists of LDR sensor which senses maximum solar power which is being given to the Microcontroller through the ADC which digitizes the LDR output. Controller then takes the decision according to then algorithm and tilts the panel towards the direction of the maximum energy given by LDR with the help of DC motor. The Motor is used to rotate the LDR to sense the max solar power. On the monitoring station which receives the data send by the system. This data is logged into the PC. The RS232 converter is used to connect the microcontroller to PC which converter PC's CMOS level to Controller's TTL level n vice versa. Limit sensors or touch sensors are provided to sense the starting and ending position of the solar panel. Keypad is provided to adjust the starting position of the solar panel.

5. Flow Chart and C Code :

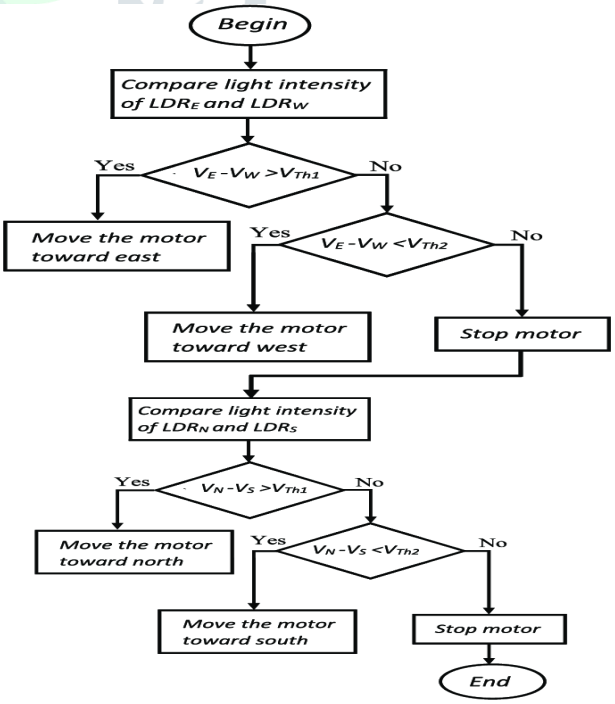

Fig.5 Flow Chart

C Code:

```
#include <16F72.h>
#include <string.h>
#include <dc motor.h>
#fuses     HS,NOWDT,PROTECT,brownout,put
#use       delay (clock=20000000)
void main()
{
  int i = 0;
  output_high(PIN_C3);
  delay_ms(1000);
  output_low(PIN_C3);
  delay_ms(1000);
  output_high(PIN_C3);
  delay_ms(1000);
  output_low(PIN_C3);
 while(1)
   {
    if(!input(PIN_A0))
    {
        forward();
    }
    if(!input(PIN_A1))
    {
        forward();
    }

 if(!input(PIN_A2))
    {
        forward();
    }
    if(!input(PIN_A3))
    {
        forward();
    }
 if(!input(PIN_A5)) //Reverse
    {
        reverse();
    }
    delay_ms(700);
   }
}
```

6. Conclusion:

Our project "**Micro Controller based solar tracker with DC motor control**" is mainly intended to track the sun direction using a bunch of LDR (Light Dependent Resistor) sensors and using a DC motor. The light from sun falls on the LDR which is fed as input to the micro controller which in turn rotates the DC motor by predefined number of steps. The rotation of DC motor depends on which LDR the light from the sun falls. We presented a means of tracking the sun's position with the help of PIC Microcontroller. Specially, it demonstrates a working software solution for maximizing solar cell output by positioning a solar panel at the point of maximum light intensity. Integrating features of all the hardware components used have been developed in it. Presence of every module has been reasoned out and placed carefully, thus contributing to the best working of the unit. Secondly, using highly advanced IC's with the help of growing technology, the project has been successfully implemented. Thus, the project has been successfully designed and tested.

REFERENCES

The sites which were used while doing this project:

1. www.wikipedia.com

2. www.allaboutcircuits.com

3. www.microchip.com

4. www.howstuffworks.com

Books Referred

1. Raj kamal –Microcontrollers Architecture, Programming, Interfacing and System Design.
2. Mazidi and Mazidi –Embedded Systems.
3. PCB Design Tutorial –David.L.Jones.
4. PIC Microcontroller Manual – Microchip.
5. Embedded C –Michael.J. Pont.

[1] Nader Barsoum and Pandian Vasant, "Simplified Solar Tracking Prototype," Transaction in Controllers and Energy, (2010).

[2] Kh. S. Karimov, et al., "A simple photo-voltaic tracking system," Solar Energy Materials & Solar Cells, pp. 49-59 (2004).

[3] Shubhajit Roy Chowdhury and HiranmaySaha, "Maximum power point tracking of partially shaded solar photovoltaic arrays," Solar Energy Materials & Solar Cells, pp. 1441-1447 (2010).

[4] Yie-Tone Chen and Cing-Hong Chen, "A DC-DC Buck Converter Chip with Integrated PWM/PFM Hybrid-Mode Control Circuit," Department of Electrical Engineering, pp. 181 – 186 (2009).

[5] Vibhor Gupta, "Working and Analysis of the H – Bridge Motor Driver Circuit Designed for," University Institute of Engineering and Technology, pp. 441-444 (2010).

[6] Aung Zaw Latt and Ni Ni Win, "Variable Speed Drive of Single Phase Induction Motor Using Frequency Control Method," Education Technology and Computer, pp. 30-34 (2009).