Standalone SCIG based Wind Energy Conversion System Based on Internal Voltage Motion Equation with Four-Level Nested NPC Converters

Shree Varsha H R,
M.Tech, Power Electronics
Dr. Ambedkar Institute of Technology
Mallathally, Bangalore,-590056

Dr.Govindaraju H V,
Associate Professor, Electrical and Electronics Engineering
Dr.Ambedkar Institute of Technology
Mallathally, Banglore-590056

***Abstract*- Worldwide, wind energy has been the fastest-growing energy technology within the last several years, and every factor indicates that the expansion will continue for several years within the future. The key part of a wind turbine generator system is a converter that can regulate the voltage and frequency to the desired value. The improvement in the reliability of the converter system is significantly large and important because of the ever-growing demand for electricity. The impact of Induction Generator based Wind Turbine framework practices, characteristics on angle, and voltage stability issues is broke down with a small signal WECS model dependent on the inward voltage movement condition in the electromechanical time-scale is proposed. This methodology model from the internal voltage vector, and depicts equipment features through the relationship between the input/output power and the internal voltage phase/amplitude. Four-level nested neutral-point (NNPC) inverters are presented in the spot of RSC and GSC with a 4LSVM method with voltage balance control (VBC) work. The proposed work has been simulated and implemented with the MATLAB/Simulink.**

Keywords—WECS, NNPC, internal voltage vector, NNPC, RSC, GSC, 4LSVM, VBC

I. INTRODUCTION

The energy of wind is the most accessible and exploitable forms of renewable vitality. Wind Energy Conversion Systems (WECS) became a concentration within the analysis of renewable energy sources.[1]Attribute able to quickly would like for electricity and exhaustion of fossil fuels, for instance, coal and oil, whose stores square measure restricted, this problem drove researchers to make another supply of energy for the era of power the foremost reluctant supply that fulfills non-contamination, accessible in wealth, more cost-effective to tackle each in low-scale and high-scale frameworks are wind. For variable speed vary, power may be equipped to grid by dominant rotor power from a variable frequency supply for a slip-ring induction machine. The generator closed-loop management performance has been studied below varied load and wind speed conditions [3], the potential curve plays a crucial role during this analysis since reactive power may be a key requirement to take care of voltage stability.[4] A new neutral-point-clamped pulse width modulation (PWM) inverter composed of main switching devices that operate as switches for PWM and auxiliary switching devices to clamp the output terminal

II MODELING OF SCIG WIND ENERGY SYSTEM

potential to the neutral point potential has been developed.[5] The neutral-point-clamped PWM inverter adopting the new PWM technique shows a super drive system efficiency, including motor efficiency, and is acceptable for a wide-range variable-speed drive system.[5] The existing three-level neutral point clamped (NPC) inverter in three-phase three-wire systems are often utilized in three-phase four-wire systems also because the split dc capacitors provide a neutral connection.[7] The variable AC power, generated from a SCIG-based variable-speed wind turbine, is rectified to DC and then inverted to AC power with constant voltage and frequency, as required by the load. The inversion stage is traditionally done by employing a pulse-width modulated voltage sourced inverter (PWM-VSI). However, conventional VSI has a voltage step-down nature; hence, to keep the DC voltage high enough to generate the desired AC output voltage, a DC booster becomes a necessity. Moreover, dead time between the on periods of the switches in each leg is required to prevent short-circuiting of the dc-side voltage. source. The four-level NNPC inverter is a combination of the Flying-Capacitor (FC) inverter and the Neutral-Point Clamped (NPC) inverter. It has less clamped diodes when compared with four-level NPC inverters, less flying capacitors when compared with four-level FC inverters, no need of transformers to provide isolated dc sources when compared with Cascaded H-Bridge (CHB) multilevel inverters. It can operate for a wide voltage range without devices in series, and the harmonic contents of it are less than that of two-level or three-level inverters with the same switching frequency. However, one prerequisite for the aforementioned advantages of NNPC inverters is the flying-capacitor voltages have to be controlled to be one-third of the total dc bus voltage so that even voltage stresses among switching devices and good current performance can be guaranteed. Various pulse width modulation (PWM) techniques along with VBC functions have been developed for NNPC inverters, including the conventional 4L-SVM, the four-level sinusoidal pulse width modulation (4L-SPWM), and the space virtual-vector modulation (SVVM). However, these existing 4L-SVM and 4L-SPWM methods mainly focus on the high output-frequency conditions, but experience severe voltage balancing problems under the low output-frequency conditions. The SVVM method along with VBC functions can solve this problem, but it needs complex virtual-vector definition and region division, together with a complicated dwelling-time calculation and switching sequence selection.

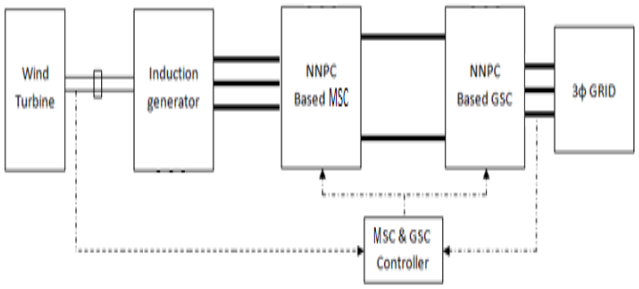

Fig1:SCIG WT structure and controllers

Two fully-rated converters connected back to back, namely MSC and GSC, as depicted in the above diagram, have been used to provide a connection between the generator and the grid. Vector control techniques have been used for MSC control. The DC link voltage is kept constant by GSC control. This is achieved by maintaining the equal power flow from generator PGen to dc-link and from dc link to the grid (PGrid). A higher value of PGen than PGrid, results in an increase of voltage at the dc link. The imbalance between the generated power and the power transported to the grid is mainly produced during the condition of fault at the grid side and therefore the voltage at dc-link ascends. To prevent a crossing of the higher limit of the voltage at the dc link, it is essential to diminish the generator power until generated power PGen becomes equal to the power delivered to grid PGrid. The SCIG consists of a machine-side converter (MSC) and a Grid side converter(GSC)

III SIMULATION DIAGRAM

The system includes a 15 KW SCIG wind turbine-generator connected to a weak grid including an unbalanced load.

Machine-side converter (MSC) changes the speed of induction generator and a Grid side converter (GSC) injects reactive power to system via a converter, using passive sign convention instantaneous active and reactive power of the grid side converter are $p_g(t)$ and $q_g(t)$, and it is given as:

$$\begin{bmatrix} p_g(t) \\ q_g(t) \end{bmatrix} = \frac{3}{2}\begin{bmatrix} v_{sd} & v_{sq} \\ v_{sq} & -v_{sd} \end{bmatrix}\begin{bmatrix} i_{gd} \\ i_{gd} \end{bmatrix}$$

Where, $v_{sd,sq}$ = dq component of stator voltage in the synchronous reference frame and $i_{gd,gq}$ are dq component of the grid-side current changed to the synchronous reference frame.

On solving grid-side current (GSC) i_{gd} and i_{gq} are given as

$$\begin{bmatrix} i_{gd} \\ i_{gd} \end{bmatrix} = K_v * \begin{bmatrix} p_g(t) \\ q_g(t) \end{bmatrix}$$

Where,

$$K_v = \frac{2}{3|V_s|^2}\begin{bmatrix} v_{sd} & v_{sq} \\ v_{sq} & -v_{sd} \end{bmatrix} \quad \text{and}$$

$$|V_s| = \sqrt{|v_{sd}|^2 + |v_{sq}|^2}$$

Similarly, the instantaneous real power, $p_s(t)$ and reactive power, $q_s(t)$ components of Squirrel Cage Induction Generator (SCIG) is:

$$\begin{bmatrix} p_s(t) \\ q_s(t) \end{bmatrix} = \frac{3}{2}\begin{bmatrix} v_{sd} & v_{sq} \\ v_{sq} & -v_{sd} \end{bmatrix}\begin{bmatrix} i_{sd} \\ i_{sq} \end{bmatrix}$$

From this, the stator current i_{sd} and i_{sq} are calculated as:

$$\begin{bmatrix} i_{sd} \\ i_{sq} \end{bmatrix} = -K_v * \begin{bmatrix} p_s(t) \\ q_s(t) \end{bmatrix}$$

The negative sign in equation goes as SCIG is offering supply to the grid.

The electrical and mechanical parameters of the turbine generator are summarized in Table

Sl No.	Parameters	Values
1	Rated Power	15 KW
2	Rated Voltage	400 V
3	System Frequency	50 Hz
4	Rated Wind Speed	12 m/s
5	Stator Resistance	0.02013 pu
6	Rotor Resistance	0.02067 pu
7	Stator Leakage Inductance	0.02919 pu
8	Rotor Leakage Inductance	0.02919 pu
9	Magnetization Inductance	1.89 pu
10	Number of Poles	4
11	Lumped Inertia Constant	0.384 s

Table 1: Study System Parameters and Data

The Simulink diagram for the circuit is shown in fig2:

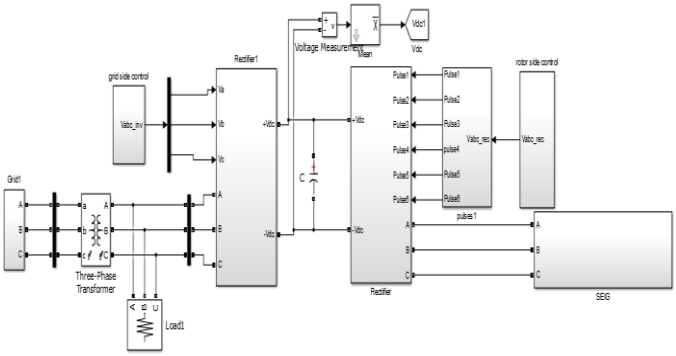

Fig 2: Simulink diagram

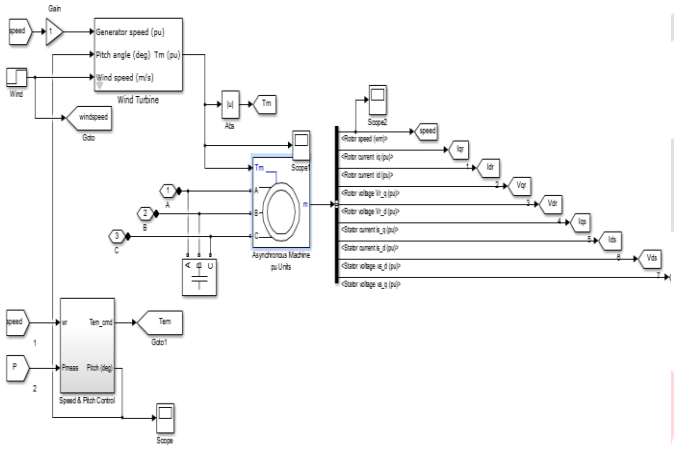

Fig 3: Circuit diagram for SCIG setup

In this, MSC and GSC is connected with rotor and stator of the induction machine respectively in order to for Squirrel Cage Induction Generator(SCIG). For both converters, there is individual control circuit which is shown below:

The Simulink diagram for MSC controller is in fig 4:

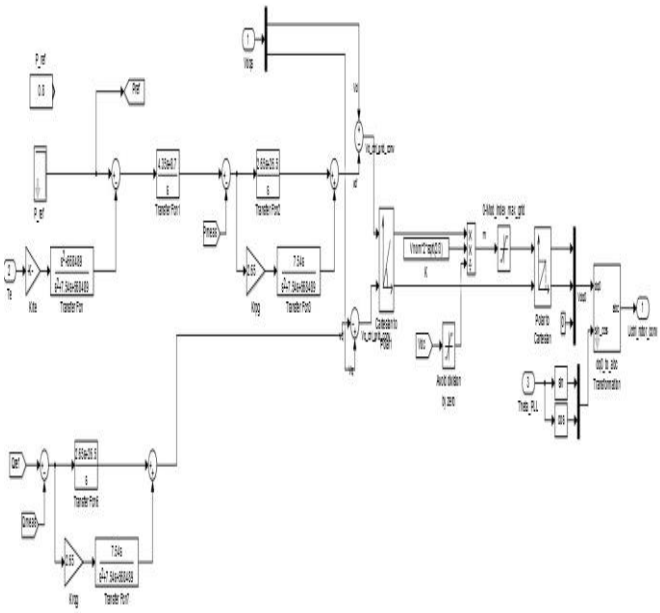

Fig 4: Simulink diagram for proposed MSC controller

The Simulink diagram for GSC control is shown in fig 5:

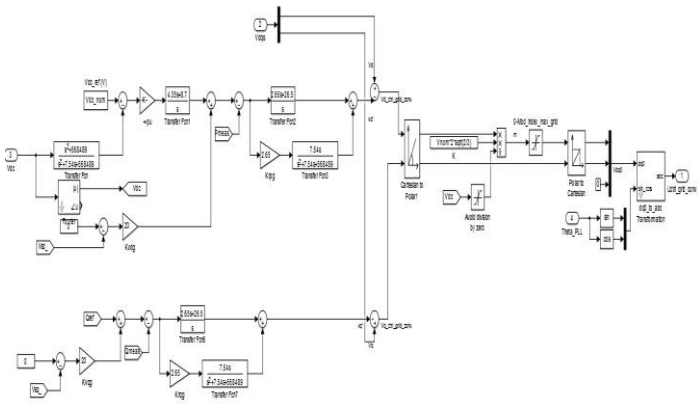

Fig 5:Simulink diagram for proposed GSC controller

IV SIMULATION RESULT:

The speed of the wind turbine is maintained as constant 12m/s and the real power reference is 0.8 pu and changed to 0.45 pu at t=4s.

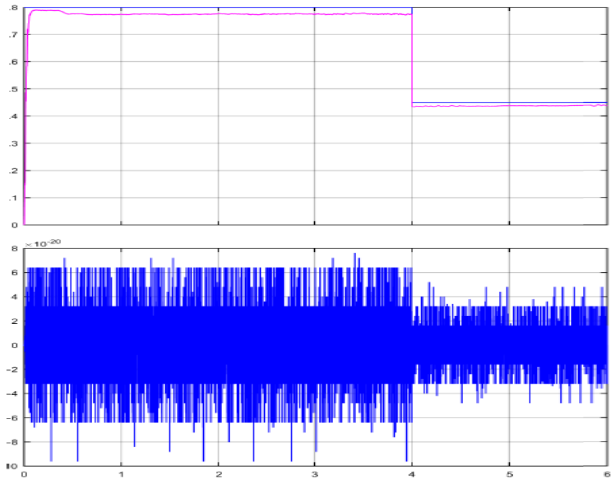

Fig 6: Real and Reactive power graph

The real power generated by the wind power generator is changed as per the reference value provided in the controller.

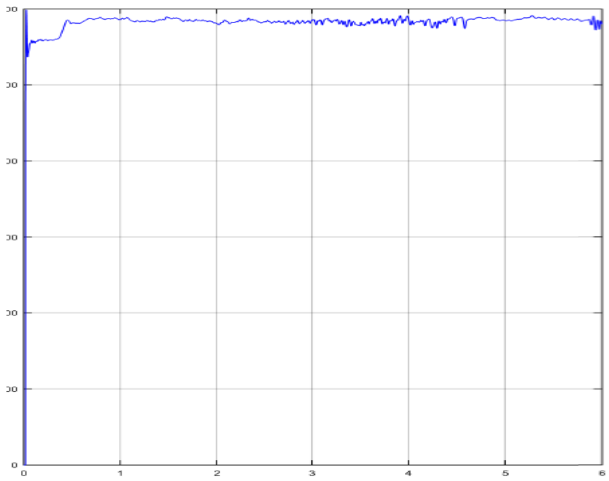

Fig7: DC link voltage

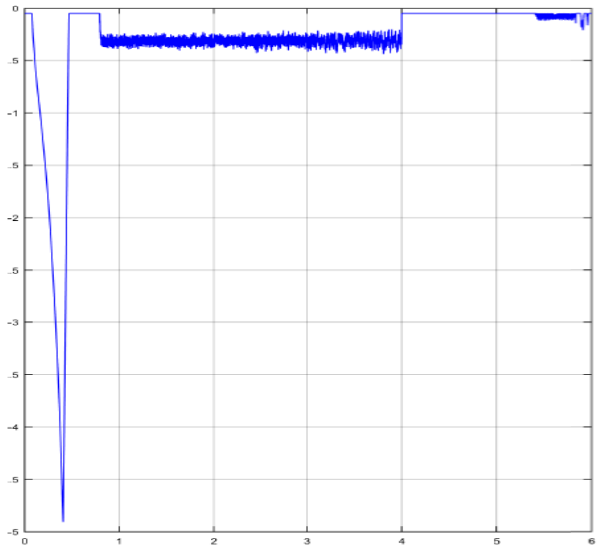

Fig 8: Wind speed

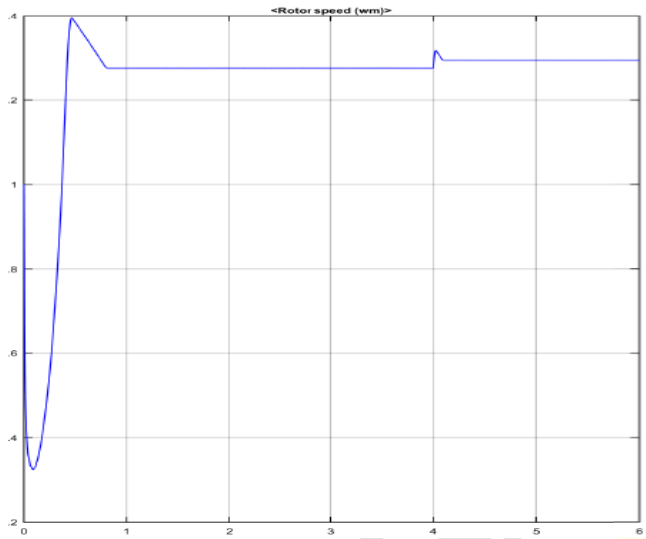

Fig 9:Graph of rotor speed

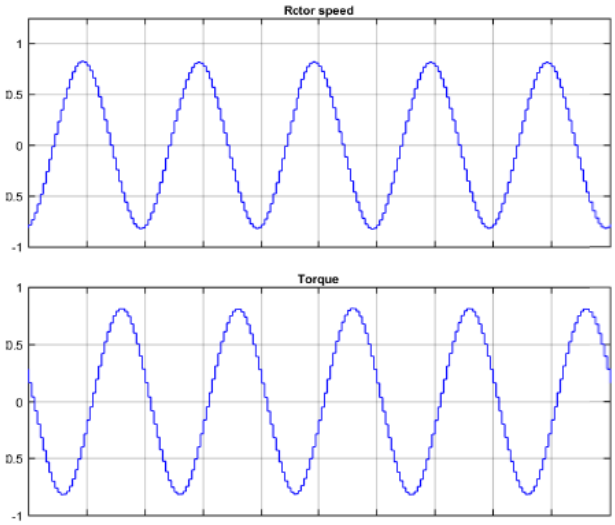

Fig10: Rotor Speed and Torque

The change in rotor speed is due to change in the real power reference at t= 4s.

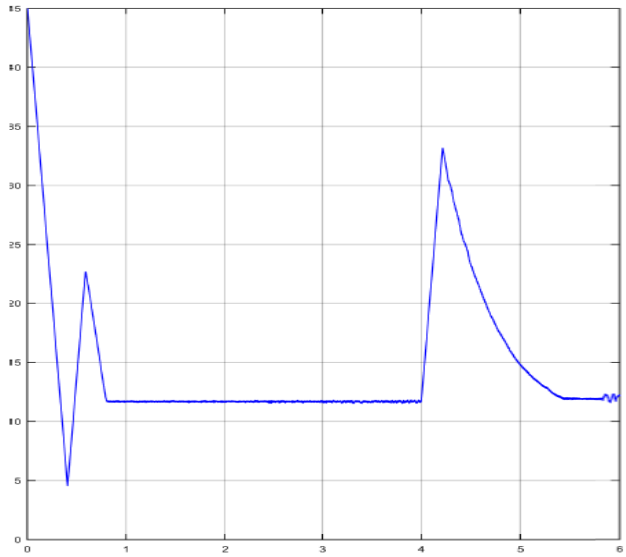

Fig 11: Graph of pitch angle

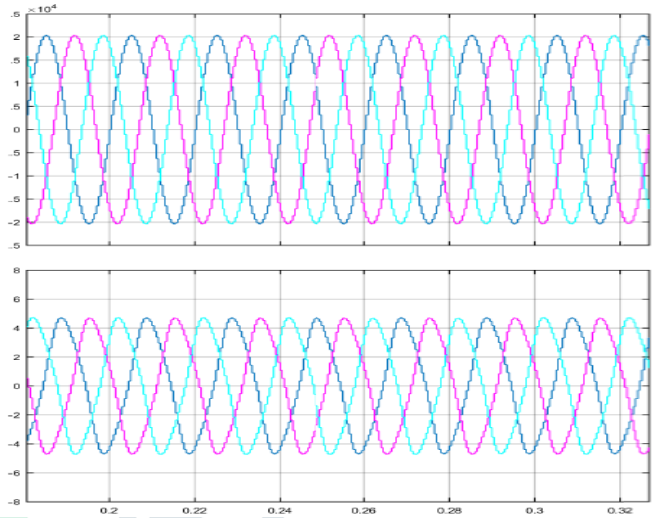

Fig 12: Stator voltage and current of SCIG

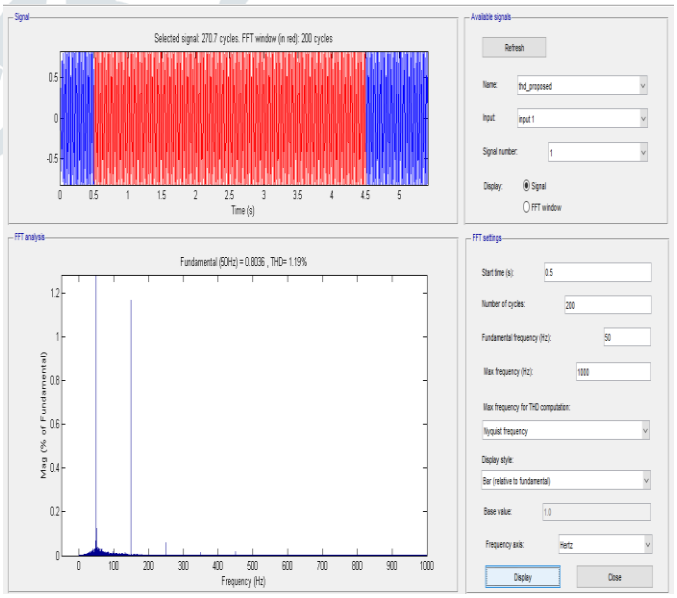

Fig 13: THD of the inverter current

V CONCLUSION

A new control scheme for a SCIG wind turbine generator has been presented in this paper which does not require the sequential decomposition of the SCIG stator/rotor currents and is less sensitive to the system parameters. This control scheme mitigates the stator reactive power and torque pulsations which appear in any balanced control scheme under an unbalanced grid voltage condition. The control method uses the grid-side converter to partially compensate for the unbalance stator voltage when the wind speed is low and the turbine works below nominal power.

It has been shown that the proposed control approach based on its simple and robust structure can offer a promising solution for SCIG control under unbalanced grid voltage conditions.

This can be further tested with Distribution networks where the SCIG with proposed control is proved as capable of acting as a Distribution Generation unit. Also, we can introduce fuzzy logic control which will lead to superior performance under transient load conditions.

This system can be used in Remote Area Power Supply and hybrid systems.

ACKNOWLEDGMENT

The authors would like to thank the Dr Ambedkar Institute of Technology Bangalore for providing the technical support.

REFERENCES

[1] Z. Chen, J.M. Guerrero, and F. Blaabjerg, "A review of the state of the art of power electronics for wind turbines," IEEE Transactions on Power Electronics, vol. 24,no. 8, pp.1859 – 1875, Aug. 2009.

[2] B.Wu, Y.Lang, N.Zargari, and S.Kouro Power conversion and control of wind energy systems. 1st ed. New Jersey, USA, Wiley, 2011.

[3] B.A. Zahir, J.G. Kettleborough, and I.R. Smith, "A standalone induction generator model producing a constant voltage constant frequency output," 4 th International Conference on Emerging Technologies, 2008, pp. 83 – 86.

[4] Y. Amirat, M.E.H. Benbouzid, B. Bensaker, R. Wamkeue, and H. Mangel, "The state of the art of generators for wind energy conversion systems," Proceedings of the International Conference on Electrical Machines, China 2006,pp. 1-6.

[5] N. Mendis, K.M. Muttaqi, S. Sayeef, and S. Perera, "Standalone operation of wind turbinebased variable speed generators with maximum power extraction capability," IEEE Transactions on Energy Conversion, vol. 27, no. 4, pp. 822-834, Dec. 2012. 184

[6] R. Rorato Londero, C. De Mattos Affonso, and J. P. Abreu Vieira, "Longterm voltage stability analysis of variable speed wind generators," IEEE Trans. Power Syst., vol. 30, no. 1, pp. 439–447, Jan. 2015.

[7] A. Nabae, I. Takahashi, and H. Akagi, "A New Neutral-Point-Clamped PWM Inverter," IEEE Trans. Ind. Appl., vol. IA-17, no. 5, pp. 518–523, 1981.

[8] D. Andler, R. Alvarez, S. Bernet, and J. Rodriguez, "Experimental Investigation of the Commutations of a 3L-ANPC Phase Leg Using 4.5-kV-5.5-kA IGCTs," IEEE Trans. Ind. Electron., vol. 60, no. 11, pp. 4820–4830, 2013.

[9] D. Ning-Yi, W. Man-Chung, and H. Ying-Duo, "Application of a three level NPC inverter as a three-phase four-wire power quality compensator by generalized 3DSVM," IEEE Trans. Power Electron., vol. 21, no. 2, pp. 440–449, 2006

AUTHORS

First Author – Shree Varsha H R is a Mtech student in Power Electronics in Dr.Ambedkar institute of technology, Bengaluru.

Second Author – Dr.Govindaraju H V is an Associate professor in the Electrical and Electronics Department in Dr.Ambedkar institute of technology,Bengaluru.